PUBLIC NOTICE

US Army Corps of Engineers ®
New England District
696 Virginia Road
Concord, MA 01742-2751

Comment Period Begins: January 3, 2023
Comment Period Ends: February 2, 2023
File Number: NAE-2022-02198
In Reply Refer To: Dan Vasconcelos
Phone: (978) 318-8653
E-mail: daniel.b.vasconcelos@usace.army.mil

The District Engineer has received a permit application to conduct work in waters of the United States from the Town of Westminster Department of Public Works, 2 Oakmont Avenue, Westminster, Massachusetts 01473, and the Massachusetts Department of Transportation (MassDOT) – Highway Division, 10 Park Plaza, Boston, Massachusetts 02116. This work is proposed in Wachusett Lake, Wyman Pond, Bolton Brook, an unnamed perennial stream, and vegetated wetlands along Route 140 (Worcester Road) in Westminster, Massachusetts. The site coordinates are: Latitude 42°31'33"N, Longitude 71°53'34"W.

Note: Although this project is eligible for review under the General Permits for Massachusetts (MA GPs), the work is not expected to be complete until after the MA GPs expire on April 5, 2023. The applicant is therefore seeking an individual permit to allow more time to complete the work.

The work involves the permanent discharge of 3,181 square feet of fill material below the Ordinary High Water (OHW) marks of Wachusett Lake, Wyman Pond, Bolton Brook, and an unnamed perennial stream, and 884 square feet within vegetated wetlands, associated with the reconstruction of a 1.6-mile long section of Route 140, from Patricia Road to the Princeton town line. The work includes the widening of Route 140 to provide a uniform 32' pavement width (11' travel lanes and 5' paved shoulders in each direction), including bicycle-accommodating shoulders, and the replacement of cross culverts, including the installation of rip-rap scour protection at the inlets and outlets. An additional 1,780 square feet of temporary impacts below OHW, and 328 square feet of temporary impacts within vegetated wetlands, are proposed resulting from construction access, water control measures, and dewatering.

The project includes the following culvert replacements:

- Existing 2'H x 5'W box culvert connecting Wachusett Lake and Wyman Pond below Route 140 to be replaced by a new 4'H x 6.5'W box culvert embedded with 12" of natural streambed material.

- Existing twin 54" pipe culverts conveying Bolton Brook below Route 140 to be replaced by a new 6'H x 6'W box culvert embedded with 12" of natural streambed material.

- Existing 48" corrugated metal pipe culvert conveying the unnamed perennial stream below Route 140 to be replaced by a new 5'H x 6'W box culvert embedded with 12" of natural streambed material.

The purpose of this project is to provide safety enhancements within the project limits for drivers and bicyclists, promote improved traffic flow, and address drainage and flooding issues. The work is shown on the enclosed

plans entitled "MASSACHUSETTS DEPARTMENT OF TRANSPORTATION HIGHWAY DIVISION PLAN AND PROFILE OF ROUTE 140 (WORCESTER ROAD) IN THE TOWN OF WESTMINSTER WORCESTER COUNTY" on 57 sheets, and dated "10/26/2022".

The project has been designed to avoid and minimize impacts to waters of the United States, including wetlands, through the use of various best management practices, including the installation of erosion and sedimentation controls at the project limits and conducting culvert work behind dewatered cofferdams to minimize turbidity in waterways. Alternatives resulting in a wider roadway that would have resulted in greater impacts to waters of the U.S. were considered but rejected. No compensatory mitigation is proposed because the impacts are considered minimal.

AUTHORITY

Permits are required pursuant to:

____ Section 10 of the Rivers and Harbors Act of 1899
__X__ Section 404 of the Clean Water Act
____ Section 103 of the Marine Protection, Research and Sanctuaries Act.
____ Section 14 of the Rivers and Harbors Act of 1899 (33 USC 408)

The decision whether to issue a permit will be based on an evaluation of the probable impact of the proposed activity on the public interest. That decision will reflect the national concern for both protection and utilization of important resources. The benefit which may reasonably accrue from the proposal must be balanced against its reasonably foreseeable detriments. All factors which may be relevant to the proposal will be considered, including the cumulative effects thereof; among those are: conservation, economics, aesthetics, general environmental concerns, wetlands, cultural value, fish and wildlife values, flood hazards, flood plain value, land use, navigation, shoreline erosion and accretion, recreation, water supply and conservation, water quality, energy needs, safety, food production and, in general, the needs and welfare of the people.

The U.S. Army Corps of Engineers, New England District (USACE), is soliciting comments from the public; Federal, state, and local agencies and officials; Indian Tribes; and other interested parties in order to consider and evaluate the impacts of this proposed activity. The USACE will consider all comments received to determine whether to issue, modify, condition or deny a permit for this proposal. To make this decision, comments are used to assess impacts on endangered species, historic properties, water quality, general environmental effects, and the other public interest factors listed above. Comments are used in the preparation of an Environmental Assessment and/or an Environmental Impact Statement pursuant to the National Environmental Policy Act. Comments are also used to determine the need for a public hearing and to determine the overall public interest of the proposed activity.

Where the activity involves the discharge of dredged or fill material into waters of the United States or the transportation of dredged material for the purpose of disposing it in ocean waters, the evaluation of the impact of the activity in the public interest will also include application of the guidelines promulgated by the Administrator, U.S Environmental Protection Agency, under authority of Section 404(b) of the Clean Water Act, and/or Section 103 of the Marine Protection Research and Sanctuaries Act of 1972, as amended.

NATIONAL HISTORIC PRESERVATION ACT

The Federal Highway Administration (FHWA) is the lead federal agency responsible for coordination pursuant to Section 106 of the National Historic Preservation Act. MassDOT has initiated coordination with the State Historic Preservation Officer (SHPO), Massachusetts Board of Underwater Archaeological Resources (BUAR), and relevant Tribal Historic Preservation Officers (THPOs) on behalf of the FHWA. Although FHWA has taken the lead on this consultation, based on his initial review, the District Engineer has determined that little likelihood exists for the proposed work to impinge upon properties with cultural or Native American significance, or listed in, or eligible for listing in, the National Register of Historic Places. The Corps will continue review and consultation as required to fulfil the requirements of the National Historic Preservation Act as part of the permit review process.

ENDANGERED SPECIES CONSULTATION

FHWA is the lead federal agency responsible for coordination pursuant to Section 7 of the Endangered Species Act. Although FHWA is the lead federal agency, the Corps has reviewed the application for the potential impact on Federally-listed threatened or endangered species and their designated critical habitat pursuant to section 7 of the Endangered Species Act as amended. It is our preliminary determination that the proposed activity for which authorization is being sought is designed, situated or will be operated/used in such a manner that it is not likely to adversely affect a listed species or their critical habitat. FHWA is coordinating with the U.S. Fish and Wildlife Service on listed species under their jurisdiction and the ESA consultation will be concluded prior to the final decision.

OTHER GOVERNMENT AUTHORIZATIONS

The following authorizations have been applied for, or have been, or will be obtained:

(X) Permit, license or assent from State.
(X) Permit from local wetland agency or conservation commission.
(X) Water Quality Certification in accordance with Section 401 of the Clean Water Act.

COMMENTS

In order to properly evaluate the proposal, we are seeking public comment. Anyone wishing to comment is encouraged to do so. Comments should be submitted in writing by the above date. If you have any questions, please contact Dan Vasconcelos at (978) 318-8653, (800) 343-4789 or (800) 362-4367, if calling from within Massachusetts.

Any person may request, in writing, within the comment period specified in this notice, that a public hearing be held to consider the application. Requests for a public hearing shall specifically state the reasons for holding a public hearing. The USACE holds public hearings for the purpose of obtaining public comments when that is the best means for understanding a wide variety of concerns from a diverse segment of the public.

The initial determinations made herein will be reviewed in light of facts submitted in response to this notice. All comments will be considered a matter of public record. Copies of letters of objection will be forwarded to the applicant who will normally be requested to contact objectors directly in an effort to reach an understanding.

THIS NOTICE IS <u>NOT</u> AN AUTHORIZATION TO DO ANY WORK.

For **Paul M. Maniccia**
Chief, Permits and Enforcement Branch
Regulatory Division

If you would prefer not to continue receiving Public Notices by email, please contact Ms. Tina Chaisson at (978) 318-8058 or e-mail her at bettina.m.chaisson@usace.army.mil.

MASSACHUSETTS DEPARTMENT OF TRANSPORTATION
HIGHWAY DIVISION

WESTMINSTER, MA ROUTE 140 (WORCESTER ROAD)			
STATE	FED. AID PROJ. NO.	SHEET NO.	TOTAL SHEETS
MA	-	1	215
PROJECT FILE NO.	607432		

TITLE SHEET AND INDEX

PLAN AND PROFILE OF

ROUTE 140 (WORCESTER ROAD)

PLANS FOR WQC/ACOE SUBMISSION
DATE: 10/26/2022

IN THE TOWN OF

WESTMINSTER

WORCESTER COUNTY

FEDERAL AID PROJECT NO. NFA

100% SUBMITTAL

THESE PLANS ARE SUPPLEMENTED BY THE OCTOBER 2017 CONSTRUCTION STANDARD DETAILS, THE 2015 OVERHEAD SIGNAL STRUCTURE AND FOUNDATION STANDARD DRAWINGS, MASSDOT TRAFFIC MANAGEMENT PLANS AND DETAIL DRAWINGS, THE 1990 STANDARD DRAWINGS FOR SIGNS AND SUPPORTS, THE 1968 STANDARD DRAWINGS FOR TRAFFIC SIGNALS AND HIGHWAY LIGHTING, AND THE LATEST EDITION OF THE AMERICAN STANDARD FOR NURSERY STOCK.

INDEX

SHEET NO.	DESCRIPTION
1	TITLE SHEET & INDEX
2	LEGEND & ABBREVIATIONS
3	GENERAL NOTES
4	KEY PLAN & BORING LOCATIONS
~~5-7~~	~~BORING LOGS~~
8-10	TYPICAL SECTIONS
N/A	WQC/ACOE IMPACT PLANS (14 SHEETS)
~~11-25~~	~~CONSTRUCTION PLANS~~
~~26-46~~	~~CONSTRUCTION PROFILES~~
~~47-61~~	~~CURB TIE & GRADING PLANS~~
~~62-65~~	~~ALIGNMENT & SURVEY TIES~~
66-80	DRAINAGE AND UTILITY PLANS
~~81-95~~	~~PAVEMENT MARKING & SIGNING PLANS~~
~~96~~	~~TRAFFIC SIGN SUMMARY SHEET~~
~~97-98~~	~~SIGN DETAIL SHEETS~~
~~99-103~~	~~TEMPORARY TRAFFIC CONTROL PLANS~~
104-105	WETLAND REPLICATION & COMPENSATORY FLOOD STORAGE PLANS
106	PLANTING DETAILS
107-109	DRAINAGE AND UTILITY DETAILS
110-114	CONSTRUCTION DETAILS
115-124	STRUCTURAL DETAILS
~~125~~	~~DRIVEWAY DETAILS~~
~~126-214~~	~~CROSS SECTIONS~~

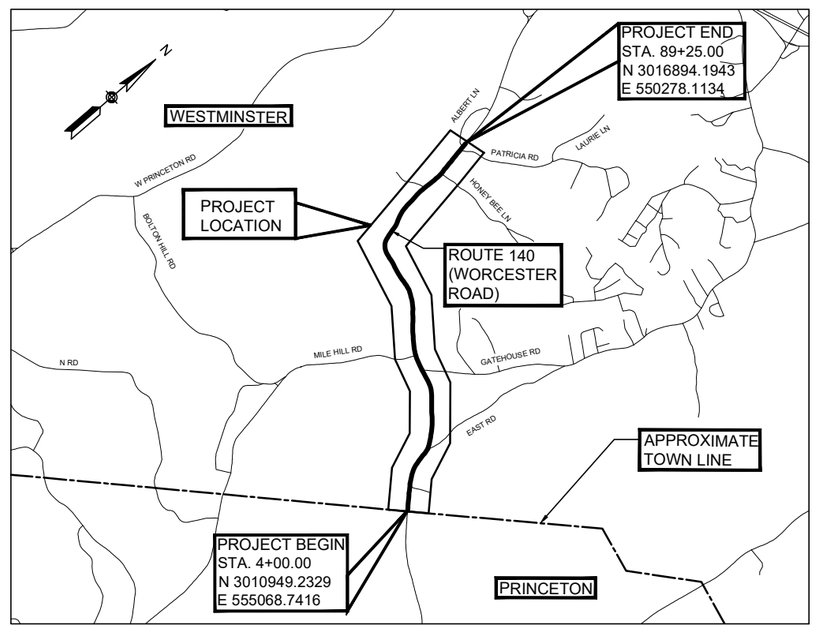

1500 0 1500 3000

SCALE 1" = 3000'

LENGTH OF PROJECT = 8525.00 FEET = 1.615 MILES

DESIGN DESIGNATION (ROUTE 140 (WORCESTER ROAD))

DESIGN SPEED	40 MPH
ADT (2017)	7,400
ADT (2027)	9,050
K	10.3%
D	50%
T (PEAK HOUR)	4.7%
T (AVERAGE DAY)	4.5%
DHV	932
DDHV	466
FUNCTIONAL CLASSIFICATION	URBAN PRINCIPAL ARTERIAL

DATE	DESCRIPTION	REV #

massDOT Massachusetts Department of Transportation Highway Division

RECOMMENDED FOR APPROVAL

CHIEF ENGINEER DATE

DEPARTMENT OF TRANSPORTATION
FEDERAL HIGHWAY ADMINISTRATION

APPROVED:

DIVISION ADMINISTRATOR DATE

APPROVED

HIGHWAY ADMINISTRATOR DATE

GREEN INTERNATIONAL AFFILIATES, INC.
Civil and Structural Engineers

WQC/ACOE PLANS SHEET 1 OF 57

607432_HD01(TITLE).DWG Plotted on 23-Aug-2022 3:16 PM

GENERAL SYMBOLS

EXISTING	PROPOSED	DESCRIPTION
JB	JB	JERSEY BARRIER
CB	CB	CATCH BASIN
		CATCH BASIN CURB INLET
FP	FP	FLAG POLE
GP	GP	GAS PUMP
MB	MB	MAIL BOX
		POST SQUARE
		POST CIRCULAR
WELL	WELL	WELL
EHH	EHH	ELECTRIC HANDHOLE
		FENCE GATE POST
GG	GG	GAS GATE
BHL #	BHL #	BORING HOLE
MW #	MW #	MONITORING WELL
TP #	TP #	TEST PIT
		HYDRANT
		LIGHT POLE
CO.BD.		COUNTY BOUND
		GPS POINT
		CABLE MANHOLE
		DRAINAGE MANHOLE
		ELECTRIC MANHOLE
		GAS MANHOLE
		MISC MANHOLE
		SEWER MANHOLE
		TELEPHONE MANHOLE
		WATER MANHOLE
MHB	MHB	MASSACHUSETTS HIGHWAY BOUND
MON		MONUMENT
SB		STONE BOUND
TB		TOWN OR CITY BOUND
		TRAVERSE OR TRIANGULATION STATION
TPL or GUY	TPL or GUY	TROLLEY POLE OR GUY POLE
HTP		TRANSMISSION POLE
UFB	UFB	UTILITY POLE W/ FIREBOX
UPDL	UPDL	UTILITY POLE WITH DOUBLE LIGHT
ULT	ULT	UTILITY POLE W / 1 LIGHT
UPL	UPL	UTILITY POLE
		BUSH
SIZE & TYPE		TREE
		STUMP
		SWAMP / MARSH
WG	WG	WATER GATE
PM	PM	PARKING METER
		OVERHEAD CABLE/WIRE
		CURBING
100 99		CONTOURS (ON-THE-GROUND SURVEY DATA)
100 99		CONTOURS (PHOTOGRAMMETRIC DATA)
		UNDERGROUND DRAIN PIPE (DOUBLE LINE 24 INCH AND OVER)
		UNDERGROUND ELECTRIC DUCT (DOUBLE LINE 24 INCH AND OVER)
		UNDERGROUND GAS MAIN (DOUBLE LINE 24 INCH AND OVER)
		UNDERGROUND SEWER MAIN (DOUBLE LINE 24 INCH AND OVER)
		UNDERGROUND TELEPHONE DUCT (DOUBLE LINE 24 INCH AND OVER)
		UNDERGROUND WATER MAIN (DOUBLE LINE 24 INCH AND OVER)
		BALANCED STONE WALL
		GUARD RAIL - STEEL POSTS
		GUARD RAIL - WOOD POSTS
		CHAIN LINK OR METAL FENCE
		WOOD FENCE
		HAY BALES/SILT FENCE
		TREE LINE
		LIMIT OF TREE CLEARING AND TRIMMING
		SAWCUT LINE
		TOP OR BOTTOM OF SLOPE
		EDGE OF PAVEMENT
		LIMIT OF MICROMILLING AND OVERLAY
		BANK OF RIVER OR STREAM
		BORDER OF WETLAND
		100 FT WETLAND BUFFER
		200 FT RIVERFRONT BUFFER
		STATE HIGHWAY LAYOUT
		TOWN OR CITY LAYOUT
		COUNTY LAYOUT
		RAILROAD SIDELINE
		TOWN OR CITY BOUNDARY LINE
		PROPERTY LINE OR APPROXIMATE PROPERTY LINE
		EASEMENT
		FLOATING SILT FENCE
		SEDIMENT CONTROL BARRIER

TRAFFIC SYMBOLS

EXISTING	PROPOSED	DESCRIPTION
1	1	CONTROLLER PHASE ACTUATED
		TRAFFIC SIGNAL HEAD (SIZE AS NOTED)
		WIRE LOOP DETECTOR (6' x 6' TYP UNLESS OTHERWISE SPECIFIED)
		VIDEO DETECTION CAMERA
		MICROWAVE DETECTOR
		PEDESTRIAN PUSH BUTTON, SIGN (DIRECTIONAL ARROW AS SHOWN) AND SADDLE
		EMERGENCY PREEMPTION CONFIRMATION STROBE LIGHT
		VEHICULAR SIGNAL HEAD
		VEHICULAR SIGNAL HEAD, OPTICALLY PROGRAMMED
		FLASHING BEACON
		PEDESTRIAN SIGNAL HEAD, (TYPE AS NOTED OR AS SPECIFIED)
RRSG	RRSG	RAILROAD SIGNAL
OR		SIGNAL POST AND BASE (ALPHA-NUMERIC DESIGNATION NOTED)
	20'	MAST ARM, SHAFT AND BASE (ARM LENGTH AS NOTED)
		HIGH MAST POLE OR TOWER
		SIGN AND POST
		SIGN AND POST (2 POSTS)
	20'	MAST ARM WITH LUMINAIRE
		OPTICAL PRE-EMPTION DETECTOR
		CONTROL CABINET, GROUND MOUNTED
		CONTROL CABINET, POLE MOUNTED
		FLASHING BEACON CONTROL AND METER PEDESTAL
		LOAD CENTER ASSEMBLY
		PULL BOX 12"x12" (OR AS NOTED)
		ELECTRIC HANDHOLE 12"x24" (OR AS NOTED)
		TRAFFIC SIGNAL CONDUIT

PAVEMENT MARKINGS SYMBOLS

EXISTING	PROPOSED	DESCRIPTION
		PAVEMENT ARROW - WHITE
ONLY	ONLY	LEGEND "ONLY" - WHITE
	SL	12" STOP LINE
	CW	12" CROSSWALK
	SWL	6" SOLID WHITE LINE
	SYL	6" SOLID YELLOW LINE
	BWL	6" BROKEN WHITE LINE (10' LINE SEGMENT, 30' GAP)
	BYL	6" BROKEN YELLOW LINE (10' LINE SEGMENT, 30' GAP)
	DWL	6" DOTTED WHITE LINE (3' LINE SEGMENT, 9' GAP)
	DYL	6" DOTTED YELLOW LINE (3' LINE SEGMENT, 9' GAP)
	DWLEx	6" DOTTED WHITE LINE EXTENSION (2' LINE SEGMENT, 6' GAP)
	DYLEx	6" DOTTED YELLOW LINE EXTENSION (2' LINE SEGMENT, 6' GAP)
	DBWL	6" DOUBLE WHITE LINE
	DBYL	6" DOUBLE YELLOW LINE
	SWGL	6" SOLID WHITE GORE LINE
		24" BIKE LANE CROSSING MARKINGS (2' SEGMENT, 2' GAP)

ABBREVIATIONS

GENERAL

AADT	ANNUAL AVERAGE DAILY TRAFFIC
ABAN	ABANDON
ADJ	ADJUST
APPROX.	APPROXIMATE
A.C.	ASPHALT CONCRETE
ACCM PIPE	ASPHALT COATED CORRUGATED METAL PIPE
BIT.	BITUMINOUS
BC	BOTTOM OF CURB
BD.	BOUND
BL	BASELINE
BLDG	BUILDING
BM	BENCHMARK
BO	BY OTHERS
BOS	BOTTOM OF SLOPE
BR.	BRIDGE
CB	CATCH BASIN
CBCI	CATCH BASIN WITH CURB INLET
CC	CEMENT CONCRETE
CCM	CEMENT CONCRETE MASONRY
CEM	CEMENT
CI	CURB INLET
CIP	CAST IRON PIPE
CLF	CHAIN LINK FENCE
CL	CENTERLINE
CMP	CORRUGATED METAL PIPE
CSP	CORRUGATED STEEL PIPE
CO.	COUNTY
CONC	CONCRETE
CONT	CONTINUOUS
CONST	CONSTRUCTION
CR GR	CROWN GRADE
DHV	DESIGN HOURLY VOLUME
DI	DROP INLET
DIA	DIAMETER
DIP	DUCTILE IRON PIPE
DW	STEADY DON'T WALK - PORTLAND ORANGE
DWY	DRIVEWAY
ELEV (or EL.)	ELEVATION
EMB	EMBANKMENT
EOP	EDGE OF PAVEMENT
EXIST (or EX)	EXISTING
EXC	EXCAVATION
F&C	FRAME AND COVER
F&G	FRAME AND GRATE
FDN.	FOUNDATION
FLDSTN	FIELDSTONE
GAR	GARAGE
GD	GROUND
GG	GAS GATE
GI	GUTTER INLET
GIP	GALVANIZED IRON PIPE
GRAN	GRANITE
GRAV	GRAVEL
GRD	GUARD
HDW	HEADWALL
HMA	HOT MIX ASPHALT
HOR	HORIZONTAL
HYD	HYDRANT
INV	INVERT
JCT	JUNCTION
L	LENGTH OF CURVE
LB	LEACH BASIN
LP	LIGHT POLE
LT	LEFT
MAX	MAXIMUM
MB	MAILBOX
MH	MANHOLE
MHB	MASSACHUSETTS HIGHWAY BOUND
MIN	MINIMUM
NIC	NOT IN CONTRACT
NO.	NUMBER
PC	POINT OF CURVATURE
PCC	POINT OF COMPOUND CURVATURE
P.G.L.	PROFILE GRADE LINE
PI	POINT OF INTERSECTION
POC	POINT ON CURVE
POT	POINT ON TANGENT
PRC	POINT OF REVERSE CURVATURE
PROJ	PROJECT
PROP	PROPOSED
PSB	PLANTABLE SOIL BORROW
PT	POINT OF TANGENCY
PVC	POINT OF VERTICAL CURVATURE
PVI	POINT OF VERTICAL INTERSECTION
PVT	POINT OF VERTICAL TANGENCY
PVMT	PAVEMENT
PWW	PAVED WATER WAY

WESTMINSTER, MA
ROUTE 140 (WORCESTER ROAD)

STATE	FED. AID PROJ. NO.	SHEET NO.	TOTAL SHEETS
MA	-	2	215
PROJECT FILE NO.	607432		

LEGEND & ABBREVIATIONS

ABBREVIATIONS (cont.)

GENERAL

R	RADIUS OF CURVATURE
R&D	REMOVE AND DISPOSE
RCP	REINFORCED CONCRETE PIPE
RD	ROAD
RDWY	ROADWAY
REM	REMOVE
RET	RETAIN
RET WALL	RETAINING WALL
ROW	RIGHT OF WAY
RR	RAILROAD
R&R	REMOVE AND RESET
R&S	REMOVE AND STACK
RT	RIGHT
SB	STONE BOUND
SHLD	SHOULDER
SMH	SEWER MANHOLE
ST	STREET
STA	STATION
SSD	STOPPING SIGHT DISTANCE
SHLO	STATE HIGHWAY LAYOUT LINE
SW	SIDEWALK
T	TANGENT DISTANCE OF CURVE/TRUCK %
TAN	TANGENT
TEMP	TEMPORARY
TC	TOP OF CURB
TOS	TOP OF SLOPE
TYP	TYPICAL
UP	UTILITY POLE
VAR	VARIES
VERT	VERTICAL
VC	VERTICAL CURVE
WCR	WHEEL CHAIR RAMP
WG	WATER GATE
WIP	WROUGHT IRON PIPE
WM	WATER METER/WATER MAIN
X-SECT	CROSS SECTION

TRAFFIC SIGNAL ABBREVIATIONS

CAB	CABINET
CCVE	CLOSED CIRCUIT VIDEO EQUIPMENT
DW	STEADY UPRAISED HAND
FDW	FLASHING UPRAISED HAND
FR	FLASHING CIRCULAR RED
FRL	FLASHING RED LEFT ARROW
FRR	FLASHING RED RIGHT ARROW
FY	FLASHING CIRCULAR YELLOW
FYL	FLASHING YELLOW LEFT ARROW
FYR	FLASHING YELLOW RIGHT ARROW
G	STEADY CIRCULAR GREEN
GL	STEADY GREEN LEFT ARROW
GR	STEADY GREEN RIGHT ARROW
GSL	STEADY GREEN SLASH LEFT ARROW
GSR	STEADY GREEN SLASH RIGHT ARROW
GV	STEADY GREEN VERTICAL ARROW
OL	OVERLAP
PED	PEDESTRIAN
PTZ	PAN, TILT, ZOOM
R	STEADY CIRCULAR RED
RL	STEADY RED LEFT ARROW
RR	STEADY RED RIGHT ARROW
TR SIG	TRAFFIC SIGNAL
TSC	TRAFFIC SIGNAL CONDUIT
W	STEADY WALKING PERSON
Y	STEADY CIRCULAR YELLOW
YL	STEADY YELLOW LEFT ARROW

GENERAL NOTES

1. THE LOCATION OF THE EXISTING UTILITIES ARE SHOWN APPROXIMATE AND HAVE NOT BEEN INDEPENDENTLY VERIFIED BY THE OWNER OR ITS REPRESENTATIVE. THE CONTRACTOR SHALL DETERMINE THE EXACT LOCATION OF ALL EXISTING UTILITIES AND SUBSURFACE STRUCTURES. THE CONTRACTOR IS RESPONSIBLE FOR MAKING FIELD INVESTIGATIONS AND OBTAINING INFORMATION FROM UTILITY COMPANIES AND INDIVIDUALS TO PINPOINT THE LOCATION AND ELEVATION OF ALL SUBSURFACE UTILITIES AND STRUCTURES. DIG-SAFE : TELEPHONE 1-888-344-7233

2. ALL UTILITY POLES REQUIRING RELOCATION ARE TO BE RELOCATED BY OTHERS.

3. ALL SIDEWALKS WITHIN THE LIMITS OF FULL-DEPTH CONSTRUCTION ARE TO BE CEMENT CONCRETE UNLESS OTHERWISE NOTED.

4. TRANSITION GRANITE CURB AT PROJECT LIMITS TO MATCH EXISTING ELEVATIONS (PAVEMENT OR EXISTING CURB).

5. THE CONTRACTOR SHALL RETAIN ALL CURBS, FENCES, WALLS, TREES, SHRUBS, POSTS, LANDSCAPE FEATURES, AND OTHER MISCELLANEOUS ITEMS WITHIN ABUTTING PROPERTIES, UNLESS OTHERWISE NOTED. WHEN RETAINING THOSE ITEMS IS NOT PRACTICAL IN THE OPINION OF THE ENGINEER, THE CONTRACTOR SHALL REMOVE, STOCKPILE, PROTECT AND RESET THE ITEMS. THE CONTRACTOR SHALL REPLACE ITEMS DAMAGED DURING REMOVAL, STOCKPILING, OR RESETTING DUE TO NEGLIGENCE, CARELESSNESS, OR MISHANDLING WITH EQUIVALENT NEW ITEMS AT NO COST TO THE OWNER.

6. ALL TREES WITHIN THE SLOPE LIMIT SHALL BE RETAINED AND PROTECTED UNLESS OTHERWISE NOTED.

7. ALL TREES CALLED OUT TO BE RETAINED WITH ROADWAY TREE PROTECTION SHALL BE PROTECTED USING ITEM 102.51 TREE PROTECTION - INDIVIDUAL AND ITEM 102.52 TREE PROTECTION - TEMPORARY FENCE.

8. CONTRACTOR SHALL PROTECT ALL PROPERTY MARKERS OF ABUTTERS.

9. TREATMENT OF SLOPE AREAS SHALL BE REPLACED IN KIND UNLESS OTHERWISE NOTED.

10. THE EXISTING CONDITIONS SHOWN ON THIS BASEMAP ARE THE RESULT OF AN ON THE GROUND INSTRUMENT SURVEY PERFORMED BETWEEN 4/15/2014 AND 12/19/2014 BY GREEN INTERNATIONAL AFFILIATES, INC. (GREEN). ADDITIONAL GROUND SURVEY WAS PERFORMED BETWEEN 1/30/2017 AND 4/27/2017, AND BETWEEN 2/21/18 AND 2/23/18 BY GREEN TO SUPPLEMENT EXISTING GROUND SURVEY.

12. HORIZONTAL AND VERTICAL CONTROL WAS ESTABLISHED WITH STATIC GPS VECTORS ON 4/17/2014 BY GREEN (SEE GREEN FIELD BOOK NO. 290-138). HORIZONTAL DATUM IS BASED ON THE MASSACHUSETTS STATE PLANE COORDINATE SYSTEM, VERTICAL DATUM IS NAVD88 (COMPUTED USING GEOID12A). THE UNIT OF MEASUREMENTS IS US SURVEY FEET.

11. WETLANDS WERE DELINEATED BY GREEN 4/18/2014, 4/29/2014, 2/22/18, 8/12/2019, 8/13/2019 AND 8/14/2019 IN ACCORDANCE WITH THE MASSACHUSETTS DEPARTMENT OF ENVIRONMENTAL PROTECTION AND FIELD LOCATED BY GREEN ON MAY 2014 AND AUGUST 2019.

12. THE RIGHT OF WAY LINES SHOWN ON THIS PLAN ARE THE DIRECT RESULT OF AN INSTRUMENT SURVEY PERFORMED ON THE GROUND BY GREEN INTERNATIONAL AFFILIATES, INC. WITH AN ERROR OF CLOSURE LESS THAN 1:15,000, AND FROM PLANS AND DEEDS OF RECORD. PRIVATE PROPERTY LINES ARE COMPILED FROM DEEDS AND PLANS AND SHOULD BE CONSIDERED APPROXIMATE.

13. THE SAID PARCELS SHOWN HERE ARE SUBJECT TO RIGHTS AND EASEMENTS AS CONTAINED IN THE VARIOUS DEEDS OF RECORD DESCRIBING SAID PREMISES. THE LOCATIONS AND EXTENT OF SAID RIGHTS AND EASEMENTS ARE NOT THE SUBJECT OF THIS SURVEY.

UTILITY NOTES:

1. ALL UNDERGROUND UTILITIES AS SHOWN WERE COMPILED USING FIELD SURVEY INFORMATION AND AVAILABLE RECORD INFORMATION. THE LOCATION OF EXISTING PIPES OR OTHER UNDERGROUND STRUCTURES OR PROPERTY LINES ARE NOT WARRANTED TO BE EXACT, NOR IS IT WARRANTED THAT ALL UNDERGROUND PIPES OR STRUCTURES ARE SHOWN. THE CONTRACTOR SHALL CALL "DIG SAFE" (1-888-344-7233) 72 HOURS (EXCLUDING SATURDAYS, SUNDAYS AND HOLIDAYS) PRIOR TO ANY EXCAVATION TO OBTAIN ACCURATE UTILITY LOCATIONS.

2. RECORD UTILITY INFORMATION FROM THE VARIOUS UTILITY COMPANIES AND PUBLIC AGENCIES ARE APPROXIMATE ONLY AND ACTUAL LOCATIONS MUST BE DETERMINED BY THE CONTRACTOR IN THE FIELD.

3. THE COMPLETION AND ACCURACY OF LATERAL UTILITY SERVICES IS NOT GUARANTEED AND MUST BE VERIFIED BY THE CONTRACTOR IN THE FIELD.

4. ALL UTILITY COMPANIES, PUBLIC AND PRIVATE MUST BE NOTIFIED, INCLUDING THOSE IN CONTROL OF UTILITIES NOT SHOWN ON THIS PLAN, (SEE CHAPTER 370, ACTS OF 1963, MASSACHUSETTS) PRIOR TO DESIGNING, EXCAVATING, BLASTING, INSTALLING, BACKFILLING, GRADING, PAVEMENT RESTORING OR REPAVING.

5. SUBSURFACE UTILITY LOCATIONS HAVE BEEN PLOTTED TO MEET UTILITY QUALITY LEVEL "C" AS DESCRIBED IN ASCE STANDARD 38-02 AND SUMMARIZED ON THIS SHEET. THE UNDERGROUND UTILITIES ARE SHOWN IN APPROXIMATE LOCATIONS BASED ON ABOVE-GROUND FIELD OBSERVATION AND EXISTING RECORD INFORMATION RECEIVED FROM UTILITY STAKE-HOLDERS.

6. INVERTS SHOWN ON PLAN ARE NOT GUARANTEED TO BE ACCURATE. DUE TO THE LIMITATIONS OF FIELD OBSERVATION AND SURVEY TECHNIQUES THE INVERTS ARE SHOWN AS APPROXIMATE ONLY AND SHALL NOT BE WARRANTED TO BE CORRECT. ADDITIONAL FIELD INVESTIGATION BY THE CONTRACTOR IS NECESSARY WHERE ACCURATE MEASUREMENTS ARE REQUIRED FOR DESIGN OF CRITICAL AREAS.

7. THE EXISTING CONDITIONS PLAN IS TO BE USED FOR THE SPECIFIED PROJECT ONLY AND IS NOT WARRANTED TO BE COMPLETE FOR ANY OTHER FUTURE PROJECTS.

SUMMARY OF UTILITY MAPPING QUALITY LEVELS:

THE FOLLOWING IS A SUMMARY OF THE SURVEY MAPPING LEVELS FOR UTILITIES AS DESCRIBED IN ASCE STANDARD 38-02, "STANDARD GUIDELINE FOR THE DEPICTION OF EXISTING SUBSURFACE UTILITY DATA". THESE GUIDELINES ARE MORE FULLY DESCRIBED IN THE ASCE STANDARD.

UTILITY QUALITY LEVEL A:
PRECISE HORIZONTAL AND VERTICAL LOCATION OF UTILITIES OBTAINED BY THE ACTUAL EXPOSURE (OR VERIFICATION OF PREVIOUSLY EXPOSED AND SURVEYED UTILITIES) AND SUBSEQUENT MEASUREMENT OF SUBSURFACE UTILITIES, USUALLY AT A SPECIFIC POINT. MINIMALLY INTRUSIVE EXCAVATION EQUIPMENT IS TYPICALLY USED TO MINIMIZE THE POTENTIAL FOR UTILITY DAMAGE. A PRECISE HORIZONTAL AND VERTICAL LOCATION, AS WELL AS OTHER UTILITY ATTRIBUTES, IS SHOWN ON PLAN DOCUMENTS. ACCURACY IS TYPICALLY SET TO 15-MM VERTICAL AND TO APPLICABLE HORIZONTAL SURVEY AND MAPPING ACCURACY AS DEFINED OR EXPECTED BY THE PROJECT OWNER.

UTILITY QUALITY LEVEL B:
INFORMATION OBTAINED THROUGH THE APPLICATION OF APPROPRIATE SURFACE GEOPHYSICAL METHODS TO DETERMINE THE EXISTENCE AND APPROXIMATE HORIZONTAL POSITION OF SUBSURFACE UTILITIES. QUALITY LEVEL B DATA SHOULD BE REPRODUCIBLE BY SURFACE GEOPHYSICS AT ANY POINT OF THEIR DEPICTION. THIS INFORMATION IS SURVEYED TO APPLICABLE TOLERANCES DEFINED BY THE PROJECT AND REDUCED ONTO PLAN DOCUMENTS.

UTILITY QUALITY LEVEL C:
INFORMATION OBTAINED BY SURVEYING AND PLOTTING VISIBLE ABOVE-GROUND UTILITY FEATURES AND BY USING PROFESSIONAL JUDGMENT IN CORRELATING THIS INFORMATION TO QUALITY LEVEL D INFORMATION.

UTILITY QUALITY LEVEL D:
INFORMATION DERIVED FROM EXISTING RECORDS OR ORAL RECOLLECTIONS.

WESTMINSTER, MA
ROUTE 140 (WORCESTER ROAD)

STATE	FED. AID PROJ. NO.	SHEET NO.	TOTAL SHEETS
MA	-	4	215
PROJECT FILE NO.	607432		

KEY PLAN & BORING LOCATIONS

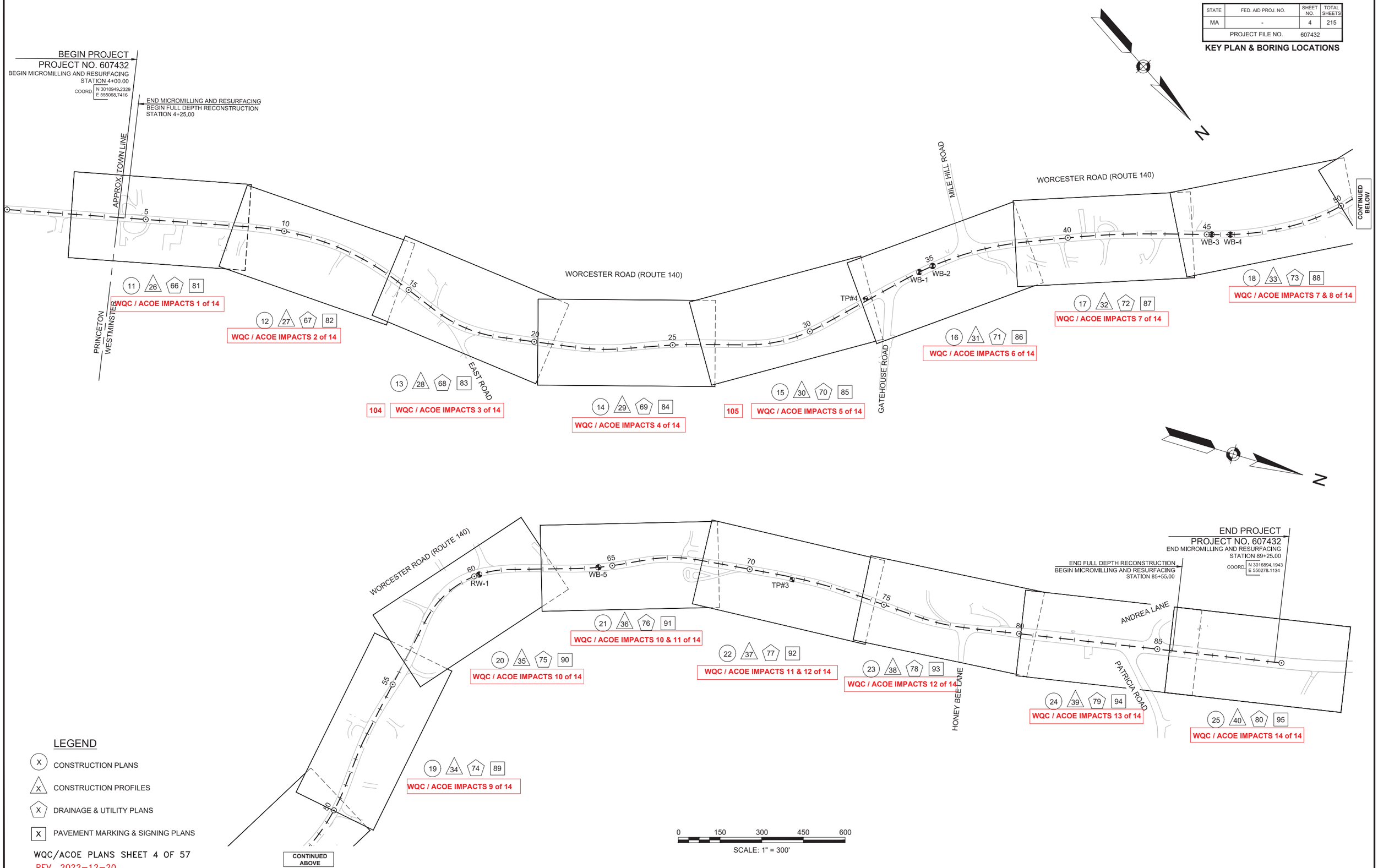

LEGEND

- (X) CONSTRUCTION PLANS
- △X CONSTRUCTION PROFILES
- ⬠X DRAINAGE & UTILITY PLANS
- [X] PAVEMENT MARKING & SIGNING PLANS

WQC/ACOE PLANS SHEET 4 OF 57
REV. 2022-12-20

607432_HD04(KEY PLAN).DWG Plotted on 29-Nov-2022 10:56 AM

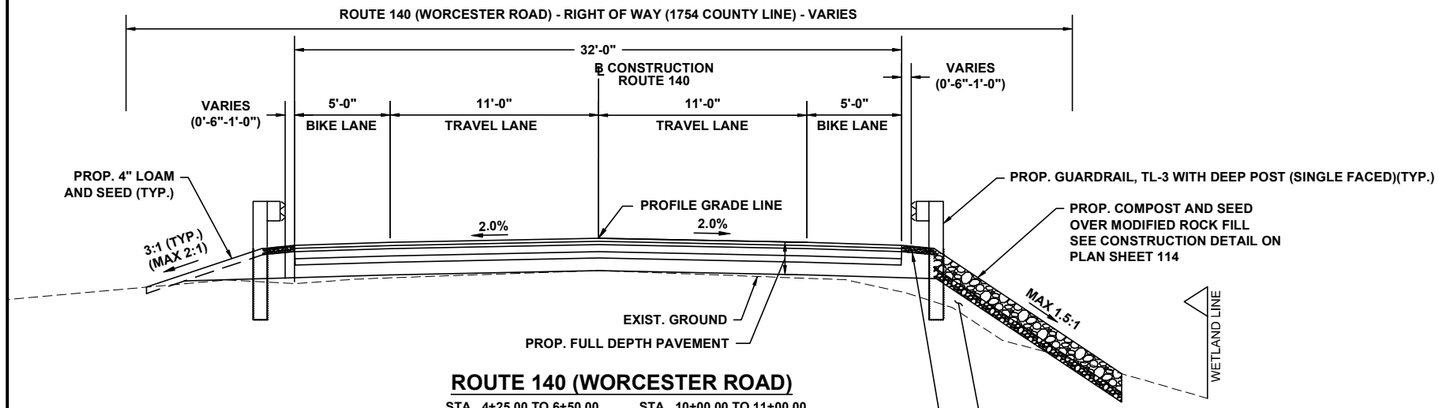

ROUTE 140 (WORCESTER ROAD)

STA. 4+25.00 TO 6+50.00	STA. 10+00.00 TO 11+00.00
STA. 13+50.00 TO 16+00.00	STA. 18+50.00 TO 27+00.00
STA. 33+00.00 TO 37+00.00	STA. 45+50.00 TO 50+50.00
STA. 51+00.00 TO 52+50.00	STA. 54+00.00 TO 60+50.00
STA. 63+00.00 TO 65+00.00	STA. 71+00.00 TO 77+50.00
STA. 79+00.00 TO 82+50.00	STA. 84+00.00 TO 85+00.00

SCALE: 1"=8'

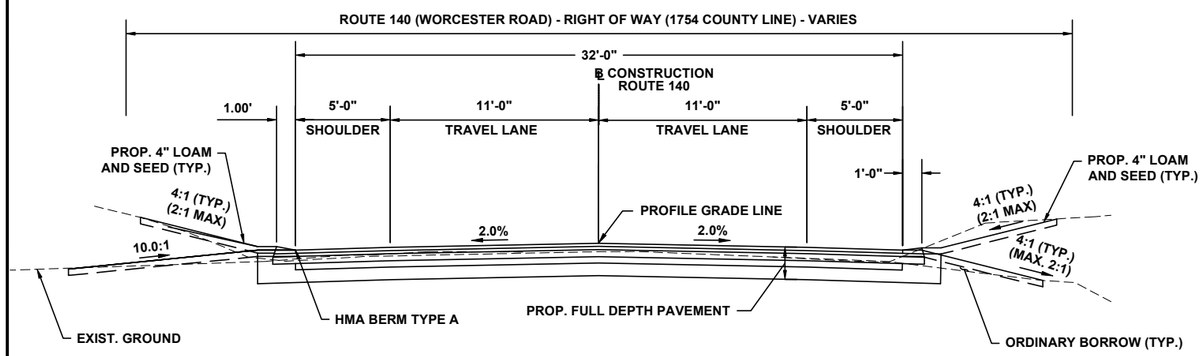

ROUTE 140 (WORCESTER ROAD)

STA. 6+50.00 TO 10+00.00	STA. 11+00.00 TO 13+50.00
STA. 16+00.00 TO 18+50.00	STA. 27+00.00 TO 33+00.00
STA. 37+00.00 TO 45+50.00	STA. 50+50.00 TO 51+00.00
STA. 52+50.00 TO 54+00.00	STA. 60+50.00 TO 63+00.00
STA. 65+00.00 TO 71+00.00	STA. 77+50.00 TO 79+00.00
STA. 82+50.00 TO 84+00.00	STA. 85+00.00 TO 85+50.00

SCALE: 1"=8'

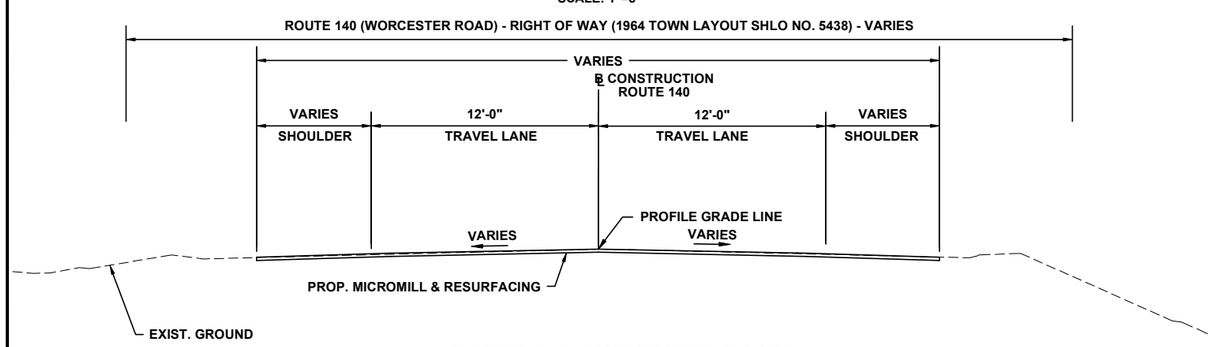

ROUTE 140 (WORCESTER ROAD)

STA. 4+00.00 TO 4+25.00	STA. 85+00.00 TO 89+25.00

SCALE: 1"=8'

PAVEMENT NOTES

PROPOSED FULL DEPTH PAVEMENT

SURFACE:	2" SUPERPAVE SURFACE COURSE 12.5 (SSC-12.5) OVER ASPHALT EMULSION FOR TACK COAT OVER
BASE:	2" SUPERPAVE INTERMEDIATE COURSE 12.5 (SIC-12.5) OVER ASPHALT EMULSION FOR TACK COAT OVER 4.5" SUPERPAVE BASE COURSE 37.5 (SBC-37.5)
SUBBASE:	4" DENSE GRADED CRUSHED STONE FOR SUBBASE OVER 8" GRAVEL BORROW, TYPE B

PROPOSED PAVEMENT MILLING & RESURFACING:

RESURFACING:	2" SUPERPAVE SURFACE COURSE 12.5 (SCC-12.5) ASPHALT EMULSION FOR TACK COAT OVER
PAVEMENT MILLING:	2" PAVEMENT FINE MILLING

PROPOSED HMA DRIVEWAY/APRON

SURFACE:	2" SUPERPAVE SURFACE COURSE 9.5 (SSC-9.5) OVER ASPHALT EMULSION FOR TACK COAT OVER 2" SUPERPAVE INTERMEDIATE COURSE 19.0 (SIC-19.0) OVER
SUBBASE:	8" GRAVEL BORROW, TYPE B

WESTMINSTER, MA
ROUTE 140 (WORCESTER ROAD)

STATE	FED. AID PROJ. NO.	SHEET NO.	TOTAL SHEETS
MA	-	9	215
PROJECT FILE NO.	607432		

TYPICAL SECTIONS 2 (2 OF 3)

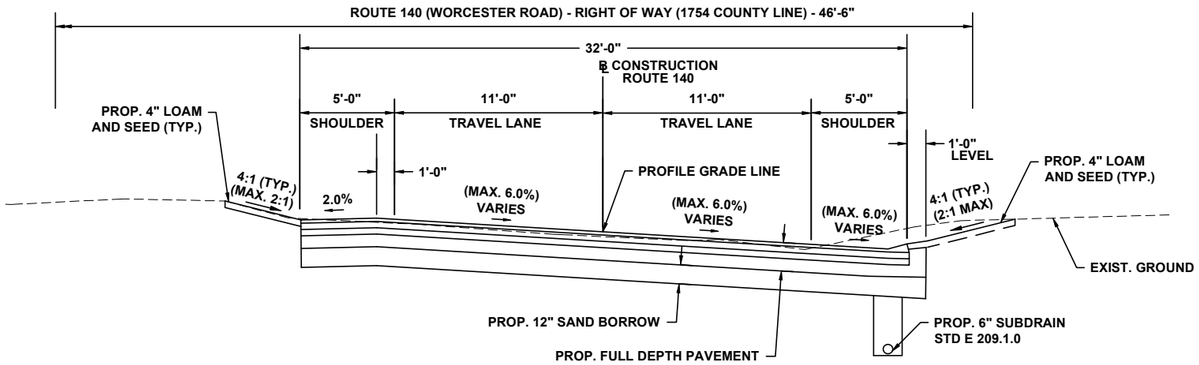

ROUTE 140 (WORCESTER ROAD) RT. SUPERELEVATION (6.0% MAX.)

STA. 56+52 - 62+34

SCALE: 1"=8'

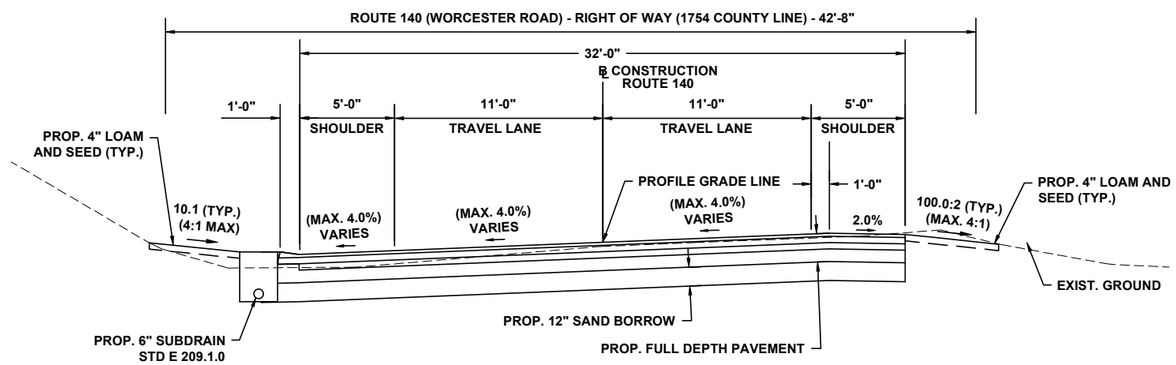

ROUTE 140 (WORCESTER ROAD) LT. SUPERELEVATION (4.0% MAX.)

STA. 26+76 - 31+34

SCALE: 1"=8'

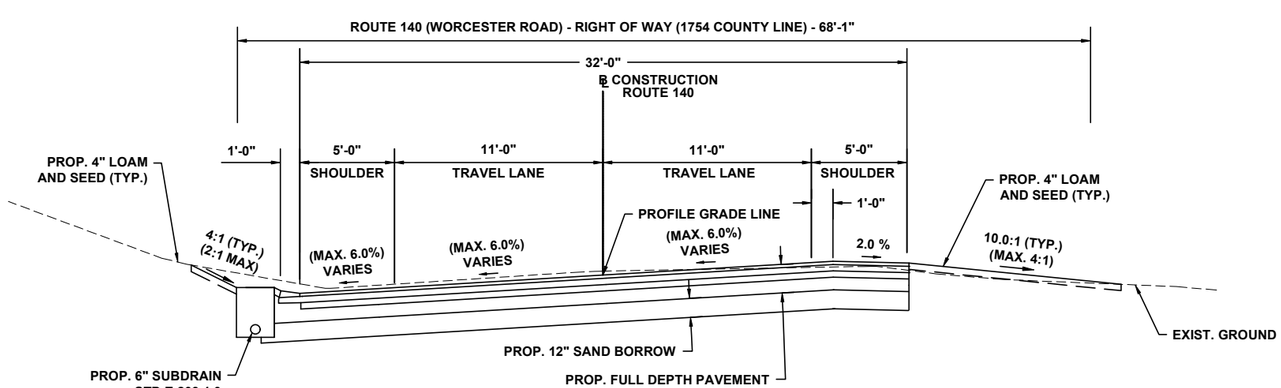

ROUTE 140 (WORCESTER ROAD) LT. SUPERELEVATION (6.0% MAX.)

STA. 15+05 - 19+88

SCALE: 1"=8'

WESTMINSTER, MA
ROUTE 140 (WORCESTER ROAD)

STATE	FED. AID PROJ. NO.	SHEET NO.	TOTAL SHEETS
MA	-	10	215
PROJECT FILE NO.	607432		

TYPICAL SECTIONS 3 (3 OF 3)

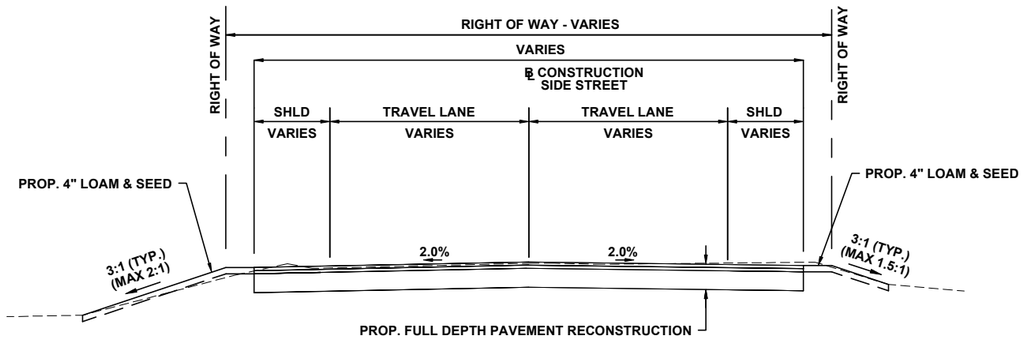

ROUTE 140 (WORCESTER ROAD) SIDE STREETS

SCALE: 1" = 8'

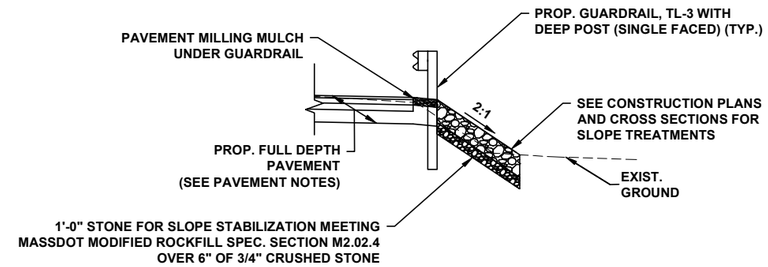

TYPICAL DEEP POST GUARDRAIL DETAIL

SCALE: 1"=8'

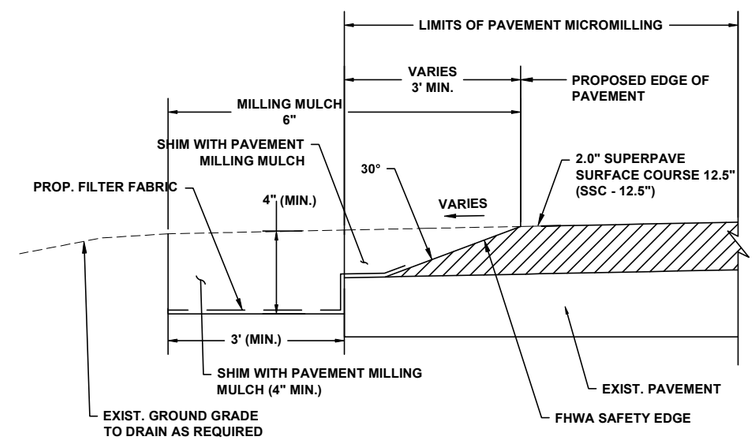

SHOULDER SAFETY EDGE DETAIL

SCALE: NOT TO SCALE

NOTES:
1. SAFETY EDGE TO BE INSTALLED ONLY IN SHOULDERS WITHOUT GUARDRAIL.

2. MILLING MULCH WILL BE PLACED AND GRADED AND COMPACTED TO A WIDTH OF 3-FEET (MIN.) FROM THE EDGE OF PAVEMENT AND A DEPTH OF 4-INCHES (MIN) AFTER COMPACTION.

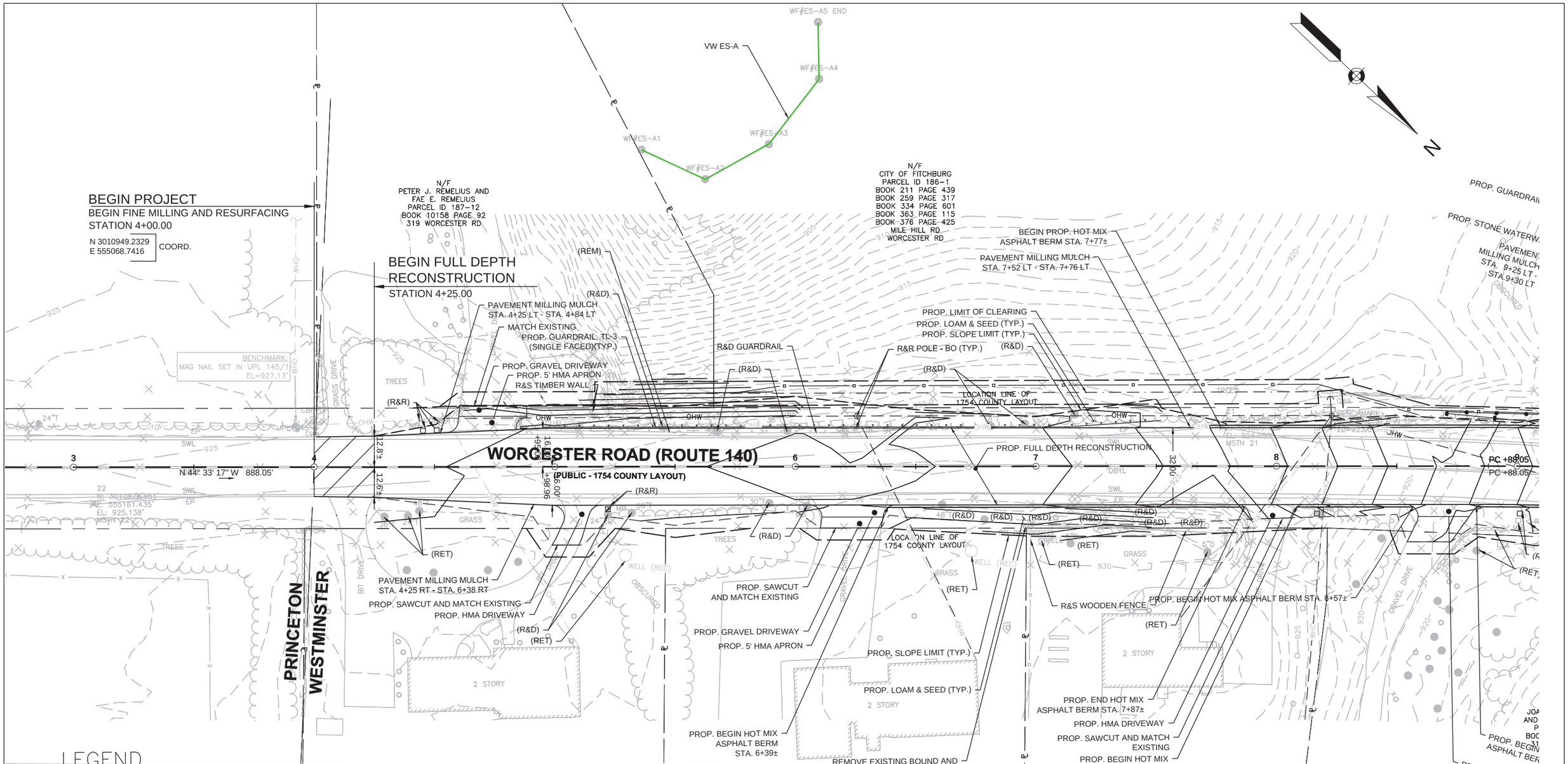

LEGEND

- VEGETATED WETLAND (VW)
- BANK/MAHW/OHW
- PERMANENT VW IMPACT AREA
- TEMPORARY VW IMPACT AREA
- WETLAND REPLICATION AREA
- PERMANENT LUW/WATERWAYS IMPACT AREA
- TEMPORARY LUW/WATERWAYS IMPACT AREA

20 0 20 40
SCALE IN FEET

TOTAL AREA	
PERMANENT VW IMPACT AREA (SF)	884
TEMPORARY WETLAND IMPACT AREA (SF)	328
PERMANENT LUW IMPACT AREA (SF)	3,181
TEMPORARY LUW/WATERWAYS IMPACT AREA (SF)	1,780
WETLAND REPLICATION AREA (SF)	1,500

WQC/ACOE IMPACTS 1 OF 14

WESTMINSTER, MA

RECONSTRUCTION OF ROUTE 140 (WORCESTER ROAD)
FROM PATRICIA ROAD TO THE PRINCETON T.L.

PREPARED BY:
GREEN INTERNATIONAL AFFILIATES, INC.
CIVIL AND STRUCTURAL ENGINEERS
239 LITTLETON RD, WESTFORD, MA (978) 923-0400
24 ALBION RD, LINCOLN, RI (401) 305-7895

PREPARED FOR:
TOWN OF WESTMINSTER
DEPARTMENT OF PUBLIC WORKS
WESTMINSTER TOWN HALL
2 OAKMONT AVENUE
WESTMINSTER, MA 01473 (978) 874-5572

SCALE: AS NOTED

MASSDOT PROJECT NO. 607432
GREEN PROJECT NO. 17025.02

DATE: 08/24/2022
REVISED:

DRAWN BY: OF
CHECKED BY: DS

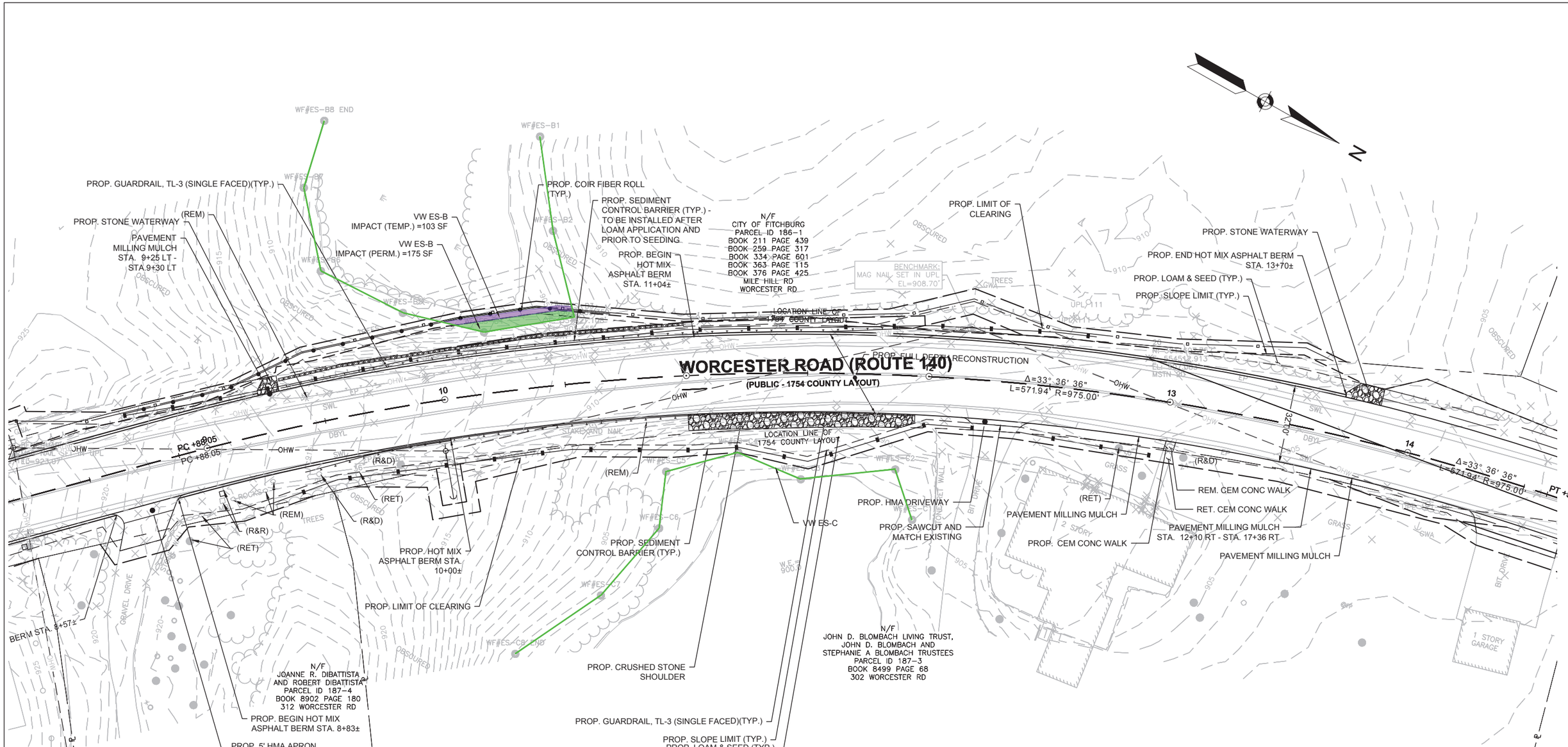

LEGEND

- VEGETATED WETLAND (VW)
- BANK/MAHW/OHW
- PERMANENT VW IMPACT AREA
- TEMPORARY VW IMPACT AREA
- WETLAND REPLICATION AREA
- PERMANENT LUW/WATERWAYS IMPACT AREA
- TEMPORARY LUW/WATERWAYS IMPACT AREA

20 0 20 40
SCALE IN FEET

WQC/ACOE PLANS SHEET 9 OF 57

WQC/ACOE IMPACTS 2 OF 14

WESTMINSTER, MA

RECONSTRUCTION OF ROUTE 140 (WORCESTER ROAD)
FROM PATRICIA ROAD TO THE PRINCETON T.L.

PREPARED BY:	PREPARED FOR:
GREEN INTERNATIONAL AFFILIATES, INC. CIVIL AND STRUCTURAL ENGINEERS 239 LITTLETON RD, WESTFORD, MA (978) 923-0400 24 ALBION RD, LINCOLN, RI (401) 305-7895	TOWN OF WESTMINSTER DEPARTMENT OF PUBLIC WORKS WESTMINSTER TOWN HALL 2 OAKMONT AVENUE WESTMINSTER, MA 01473 (978) 874-5572
SCALE: AS NOTED	MASSDOT PROJECT NO. 607432 GREEN PROJECT NO. 17025.02
DATE: 08/24/2022 REVISED:	DRAWN BY: OF CHECKED BY: DS

PARCEL ID 186-1
BOOK 211 PAGE 439
BOOK 259 PAGE 317
BOOK 334 PAGE 601
BOOK 363 PAGE 115
BOOK 376 PAGE 425
MILE HILL RD
WORCESTER RD

N/F
DAVID A. WOMBLE
PARCEL ID 187-13
BOOK 5979 PAGE 182
295 WORCESTER RD

N/F
CITY OF FITCHBURG
PARCEL ID 186-1
BOOK 211 PAGE 439
BOOK 259 PAGE 317
BOOK 334 PAGE 601
BOOK 363 PAGE 115
BOOK 376 PAGE 425
MILE HILL RD
WORCESTER RD

PAVEMENT MILLING MULCH
STA. 18+50 LT - STA. 23+80 LT
PROP. GRASS SWALE
PROP. SLOPE LIMIT (TYP.)
PROP. LOAM & SEED (TYP.)
PAVEMENT MILLING MULCH

PROP. LOAM & SEED

PAVEMENT MILLING MULCH
STA. 13+70 LT - STA. 16+19 LT
PAVEMENT MILLING MULCH

PROP. BEGIN HOT MIX
ASPHALT BERM
STA. 16+19
PROP. 5' HMA APRON
PROP. GRAVEL DRIVEWAY
MATCH EXISTING
R&R MAILBOX

Δ=33° 36' 36"
L=671.94' R=975.00'
PT +59.99
15
N 10° 56' 41" W 158.86'
16
PC +18.85
17
Δ=30° 08' 30"
L=255.14' R=485.00'
N 64° 07' 48" E 27.14'
18
PT +73.99
19
20
N 41° 06' 11" W 283.43'

PROP. END HOT MIX
ASPHALT BERM
STA. 18+50
LOCATION LINE OF
1754 COUNTY LAYOUT

PROP. FULL DEPTH
RECONSTRUCTION

WORCESTER ROAD (ROUTE 140)
(PUBLIC) 1754 COUNTY LAYOUT

PROP. SEDIMENT
CONTROL BARRIER (TYP.)
PROP. LOAM & SEED (TYP.)
PROP. GUARDRAIL, TL-3 (SINGLE FACED)(TYP.)
BVW ES-D

PAVEMENT
MILLING MULCH
PROP. 5' HMA APRON
PROP. GRAVEL DRIVEWAY
MATCH EXISTING
PROP. 5' HMA APRON
PROP. GRAVEL DRIVEWAY
MATCH EXISTING
PROP. SLOPE LIMITS (TYP.)
PAVEMENT
MILLING MULCH
REMOVE PAVEMENT & PROP. LOAM & SEED
PROP. TREE PROTECTION
PAVEMENT MILLING MULCH
STA. 100+32 RT - STA. 100+75 RT

EAST ROAD
(PUBLIC)
1804 TOWN LAYOUT

LOCATION LINE OF
1754 COUNTY LAYOUT

PAVEMENT MILLING MULCH
STA. 100+13 LT - STA. 100+74 LT

N/F
GRAHAM M. JORDISON
AND JANINE D. JORDISON
PARCEL ID 187-2
BOOK 8829 PAGE 10
204 EAST RD

LIMIT OF FULL DEPTH RECONSTRUCTION
BEGIN GRAVEL PLACEMENT
STA. 100+33.00

LIMIT OF WORK
LIMIT OF GRAVEL PLACEMENT
STA. 100+75.00

1804 TOWN LAYOUT
N 13° 10' 57" E 78.40'

N/F
TOWN OF WESTMINSTER
PARCEL ID 187-1
BOOK XX PAGE XX
EAST RD

N/F
RICHARD E. FORKEY
& SHELBY J. FORKEY
PARCEL ID 171-11
BOOK 5010 PAGE 246
19 GATEHOUSE RD

WETLAND REPLICATION
AREA = 1500 SF

LEGEND

- VEGETATED WETLAND (VW)
- BANK/MAHW
- PERMANENT VW IMPACT AREA
- TEMPORARY VW IMPACT AREA
- WETLAND REPLICATION AREA
- PERMANENT LUW/WATERWAYS IMPACT AREA
- TEMPORARY LUW/WATERWAYS IMPACT AREA

20 0 20 40
SCALE IN FEET

WQC/ACOE PLANS SHEET 10 OF 57

WQC/ACOE IMPACTS 3 OF 14

WESTMINSTER, MA

RECONSTRUCTION OF ROUTE 140 (WORCESTER ROAD)
FROM PATRICIA ROAD TO THE PRINCETON T.L.

PREPARED BY:	PREPARED FOR:
GREEN INTERNATIONAL AFFILIATES, INC. CIVIL AND STRUCTURAL ENGINEERS 239 LITTLETON RD, WESTFORD, MA (978) 923-0400 24 ALBION RD, LINCOLN, RI (401) 305-7895	TOWN OF WESTMINSTER DEPARTMENT OF PUBLIC WORKS WESTMINSTER TOWN HALL 2 OAKMONT AVENUE WESTMINSTER, MA 01473 (978) 874-5572
SCALE: AS NOTED	MASSDOT PROJECT NO. 607432 GREEN PROJECT NO. 17025.02
DATE: 08/24/2022 REVISED:	DRAWN BY: OF CHECKED BY: DS

N/F
CITY OF FITCHBURG
PARCEL ID 186-1
BOOK 211 PAGE 439
BOOK 259 PAGE 317
BOOK 334 PAGE 601
BOOK 363 PAGE 115
BOOK 376 PAGE 425
MILE HILL RD
WORCESTER RD

PAVEMENT MILLING MULCH
STA. 20+32 LT - STA. 27+30 LT

PROP. STONE WATERWAY

PROP. LOAM AND SEED (TYP.)
BVW ES-F

PROP. GRASS SWALE

PROP. SEDIMENT CONTROL
BARRIER (TYP.)

PROP. SLOPE LIMIT (TYP.)

PROP. BEGIN HOT MIX
ASPHALT BERM STA.
23+80±

PROP. END HOT MIX
ASPHALT BERM STA.
24+32±

LOCATION LINE OF
1754 COUNTY LAYOUT

BVW ES-E

PROP. SEDIMEN

WORCESTER ROAD (ROUTE 140)

(PUBLIC - 1754 COUNTY LAYOUT)

N 41° 05' 11" W 283.43'

PC +57.42

Δ=11° 51' 41"
L=158.37' R=765.00'

PT +15.79

N 52° 56' 52" W 146.79'

PC +62.58

Δ=4° 39' 43"
L=122.05' R=1500.00'

PT +84.63

N 48° 17' 09" W 179.67'

32.20'

PROP. FULL DEPTH
RECONSTRUCTION

PAVEMENT MILLING MULCH
STA. 20+95 RT - STA. 23+80 RT

LOCATION LINE OF
1754 COUNTY LAYOUT

PROP. SEDIMENT CONTROL BARRIER (TYP.)

BVW ES-D

PROP. LOAM & SEED (TYP.)

PROP. SLOPE LIMIT (TYP.)

PROP. BEGIN HOT MIX
ASPHALT BERM STA.
23+80±

PROP. END HOT MIX
ASPHALT BERM STA.
24+32±

PROP. STONE FOR
PIPE ENDS

PROP. SLOPE LIMIT (

N/F
SHELBY J. FORKEY, TRUSTEE
OF THE SHELBY J. FORKEY
REVOCABLE TRUST
PARCEL ID 171-11
BOOK 8976 PAGE 332
19 GATEHOUSE RD

N/F
GANNON FAMILY IRREVOCABLE TRUST,

N/F
RICHARD M. PUENTE
AND BRENDA L. PUENTE
PARCEL ID 172-54
BOOK 6636 PAGE 69
11 GATEHOUSE RD

LEGEND

- VEGETATED WETLAND (VW)
- BANK/MAHW
- PERMANENT VW IMPACT AREA
- TEMPORARY VW IMPACT AREA
- WETLAND REPLICATION AREA
- PERMANENT LUW/WATERWAYS IMPACT AREA
- TEMPORARY LUW/WATERWAYS IMPACT AREA

20 0 20 40
SCALE IN FEET

WQC/ACOE PLANS SHEET 11 OF 57

WQC/ACOE IMPACTS 4 OF 14

WESTMINSTER, MA

RECONSTRUCTION OF ROUTE 140 (WORCESTER ROAD)
FROM PATRICIA ROAD TO THE PRINCETON T.L.

PREPARED BY:	PREPARED FOR:
GREEN INTERNATIONAL AFFILIATES, INC. CIVIL AND STRUCTURAL ENGINEERS 239 LITTLETON RD, WESTFORD, MA (978) 923-0400 24 ALBION RD, LINCOLN, RI (401) 305-7895	TOWN OF WESTMINSTER DEPARTMENT OF PUBLIC WORKS WESTMINSTER TOWN HALL 2 OAKMONT AVENUE WESTMINSTER, MA 01473 (978) 874-5572
SCALE: AS NOTED	MASSDOT PROJECT NO. 607432 GREEN PROJECT NO. 17025.02
DATE: 08/24/2022 REVISED:	DRAWN BY: OF CHECKED BY: DS

PROP. SEDIMENT CONTROL BARRIER (TYP.)

PAVEMENT MILLING MULCH
20+32 LT - STA. 27+30 LT

PROP. BEGIN HOT MIX
ASPHALT BERM STA. 27+31±

N/F
CITY OF FITCHBURG
PARCEL ID 186-1
BOOK 211 PAGE 439
BOOK 259 PAGE 317
BOOK 334 PAGE 601
BOOK 363 PAGE 115
BOOK 376 PAGE 425
MILE HILL RD
WORCESTER RD

PROP. STONE RIP RAP

PROP. STONE WATERWAY

PROP. SLOPE LIMIT (TYP.)

PROP. LOAM & SEED (TYP.)

PC +64.30

PROP. FULL DEPTH RECONSTRUCTION

Δ=29° 16' 21"
L=281.00' R=550.00'

320.00'

N 77° 33' 30" W 342.00'

PT +45.30

PC +14.66

PT +43.85

BENCHMARK:
XCUT SET TOP GUARDRAIL POST
EL=893.23'

(REM)

PROP. STONE RIP RAP

PROP. FLOATING SILT FENCE (TYP.)

PROP. COMPOST AND SEED OVER MODIFIED ROCK FILL

PROP. GUARDRAIL, TL-3 (SINGLE FACED)(TYP.)

SLOPE LIMIT (TYP.)

PROP. LOAM & SEED (TYP.)

PROP. SEDIMENT CONTROL BARRIER (TYP.)

PAVEMENT MILLING MULCH
24+32 RT - STA. 28+61 RT

N/F
DAVID M. TAYLOR
PARCEL ID 172-55
BOOK 8756 PAGE 245
5 GATEHOUSE RD

LUW ES-D
IMPACT (PERM.) = 931 SF

COMPENSATORY FLOOD
STORAGE AREA
SEE SHEET 105

VW ES-D

N 45° 53' 36" E 156.15'

LEGEND

- VEGETATED WETLAND (VW)
- BANK/MAHW/OHW
- PERMANENT VW IMPACT AREA
- TEMPORARY VW IMPACT AREA
- WETLAND REPLICATION AREA
- PERMANENT LUW/WATERWAYS IMPACT AREA
- TEMPORARY LUW/WATERWAYS IMPACT AREA

20 0 20 40
SCALE IN FEET

WQC/ACOE PLANS SHEET 12 OF 57

WQC/ACOE IMPACTS 5 OF 14

WESTMINSTER, MA

RECONSTRUCTION OF ROUTE 140 (WORCESTER ROAD)
FROM PATRICIA ROAD TO THE PRINCETON T.L.

PREPARED BY:	PREPARED FOR:
GREEN INTERNATIONAL AFFILIATES, INC. CIVIL AND STRUCTURAL ENGINEERS 239 LITTLETON RD, WESTFORD, MA (978) 923-0400 24 ALBION RD, LINCOLN, RI (401) 305-7895	TOWN OF WESTMINSTER DEPARTMENT OF PUBLIC WORKS WESTMINSTER TOWN HALL 2 OAKMONT AVENUE WESTMINSTER, MA 01473 (978) 874-5572
SCALE: AS NOTED	MASSDOT PROJECT NO. 607432 GREEN PROJECT NO. 17025.02
DATE: 08/24/2022 REVISED:	DRAWN BY: OF CHECKED BY: DS

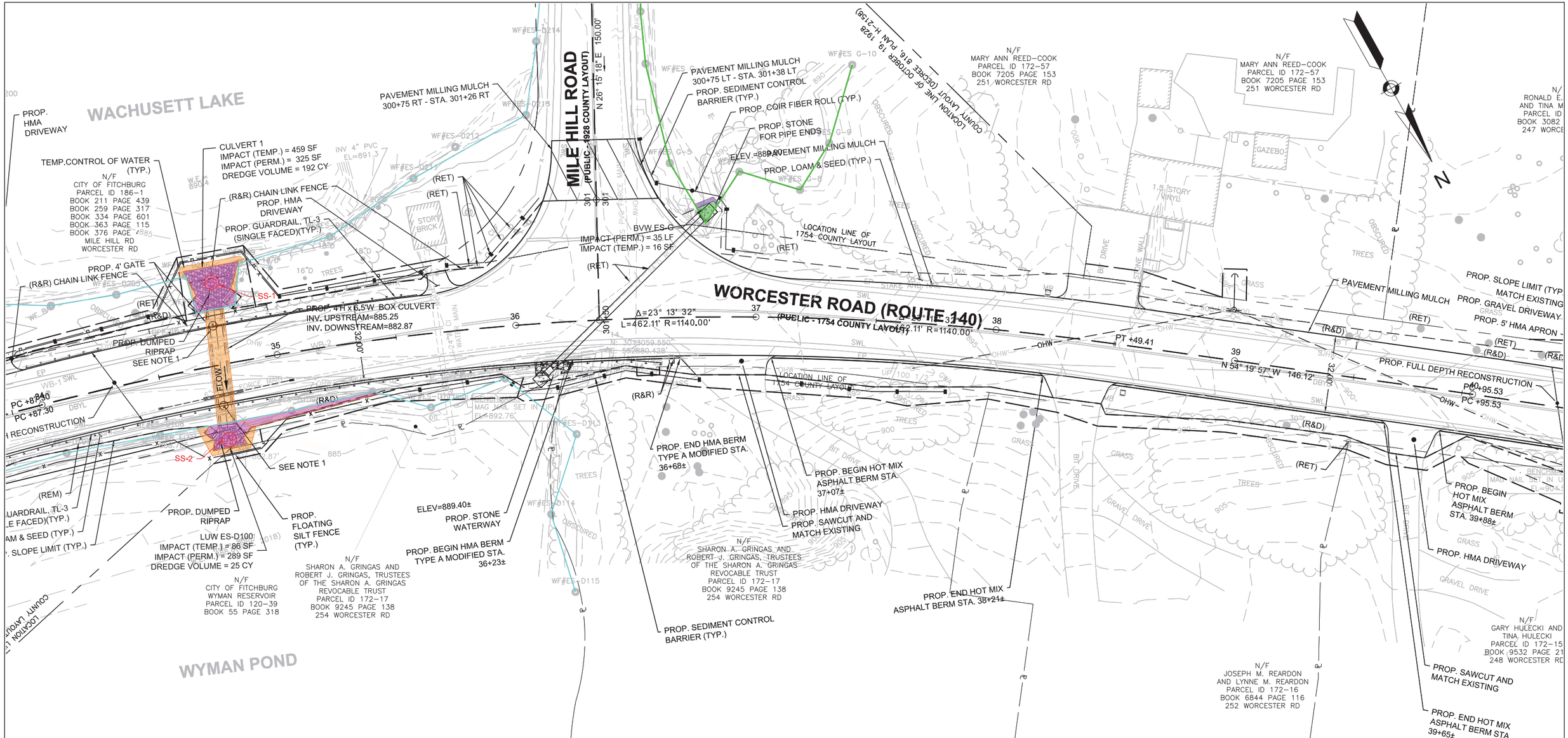

LEGEND

- VEGETATED WETLAND (VW)
- BANK/MAHW/OHW
- PERMANENT VW IMPACT AREA
- TEMPORARY VW IMPACT AREA
- WETLAND REPLICATION AREA
- PERMANENT LUW/WATERWAYS IMPACT AREA
- TEMPORARY LUW/WATERWAYS IMPACT AREA

20 0 20 40
SCALE IN FEET

WQC/ACOE PLANS SHEET 13 OF 57

WQC/ACOE IMPACTS 6 OF 14

WESTMINSTER, MA

RECONSTRUCTION OF ROUTE 140 (WORCESTER ROAD)
FROM PATRICIA ROAD TO THE PRINCETON T.L.

PREPARED BY:	PREPARED FOR:
GREEN INTERNATIONAL AFFILIATES, INC. CIVIL AND STRUCTURAL ENGINEERS 239 LITTLETON RD, WESTFORD, MA (978) 923-0400 24 ALBION RD, LINCOLN, RI (401) 305-7895	TOWN OF WESTMINSTER DEPARTMENT OF PUBLIC WORKS WESTMINSTER TOWN HALL 2 OAKMONT AVENUE WESTMINSTER, MA 01473 (978) 874-5572
SCALE: AS NOTED	MASSDOT PROJECT NO. 607432 GREEN PROJECT NO. 17025.02
DATE: 08/24/2022 REVISED:	DRAWN BY: OF CHECKED BY: DS

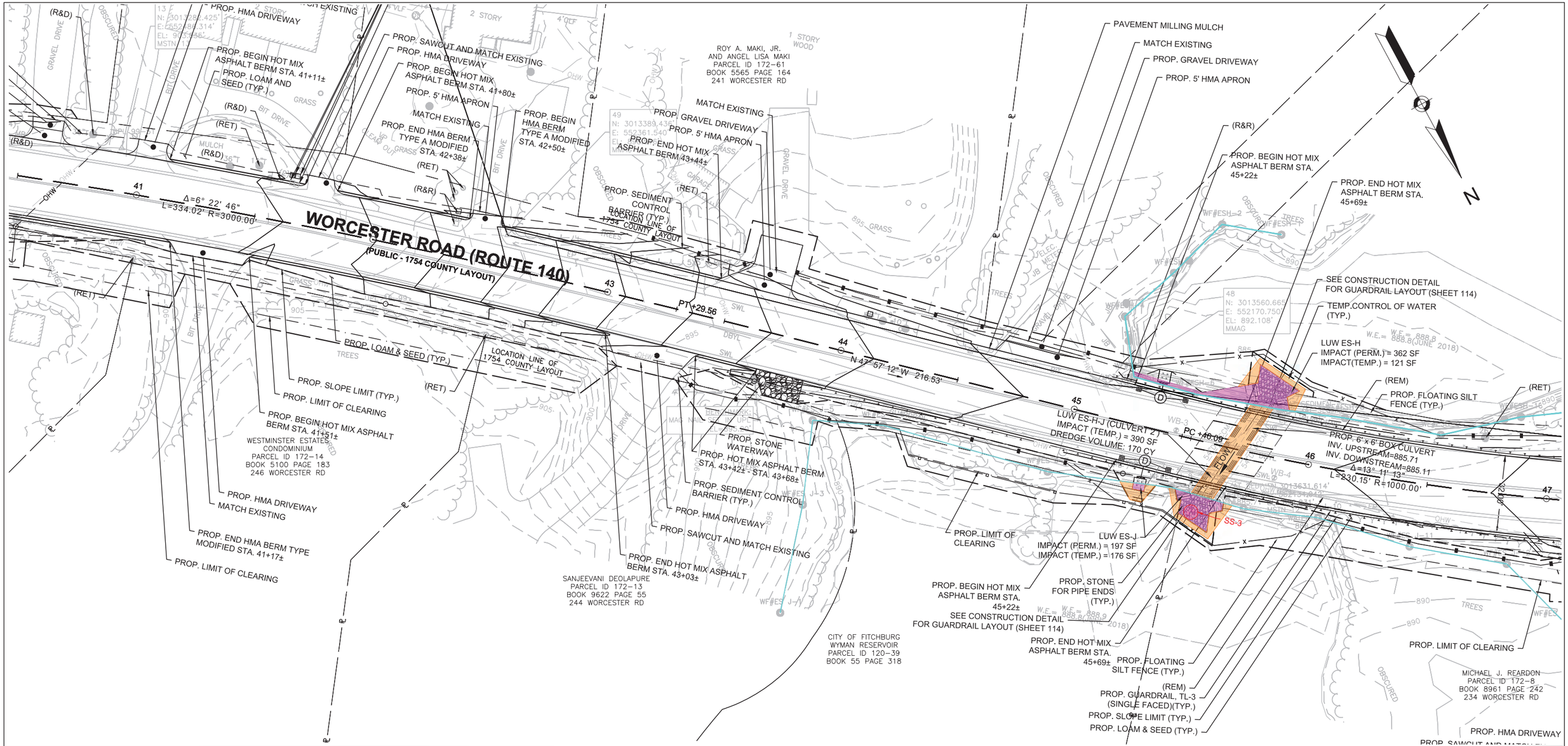

LEGEND

- VEGETATED WETLAND (VW)
- BANK/MAHW/OHW
- PERMANENT VW IMPACT AREA
- TEMPORARY VW IMPACT AREA
- WETLAND REPLICATION AREA
- PERMANENT LUW/WATERWAYS IMPACT AREA
- TEMPORARY LUW/WATERWAYS IMPACT AREA

20 0 20 40
SCALE IN FEET

WQC/ACOE PLANS SHEET 14 OF 57

WQC/ACOE IMPACTS 7 OF 14

WESTMINSTER, MA

RECONSTRUCTION OF ROUTE 140 (WORCESTER ROAD)
FROM PATRICIA ROAD TO THE PRINCETON T.L.

PREPARED BY:	PREPARED FOR:
GREEN INTERNATIONAL AFFILIATES, INC. CIVIL AND STRUCTURAL ENGINEERS 239 LITTLETON RD, WESTFORD, MA (978) 923-0400 24 ALBION RD, LINCOLN, RI (401) 305-7895	TOWN OF WESTMINSTER DEPARTMENT OF PUBLIC WORKS WESTMINSTER TOWN HALL 2 OAKMONT AVENUE WESTMINSTER, MA 01473 (978) 874-5572
SCALE: AS NOTED	MASSDOT PROJECT NO. 607432 GREEN PROJECT NO. 17025.02
DATE: 08/24/2022 REVISED:	DRAWN BY: OF CHECKED BY: DS

N/F
WACHUSETT MOUNTAIN
ASSOCIATES, INC.
PARCEL ID 172-62
BOOK 10085 PAGE 36
WORCESTER RD

N/F
WACHUSETT MOUNTAIN
ASSOCIATES, INC.
PARCEL ID 172-62
BOOK 10085 PAGE 36
WORCESTER RD

W.E.= 891.0(JUNE 2018)

INV.= 894.50±
PROP. HW
ELEV=896.50±

PROP. SEDIMENT CONTROL BARRIER (TYP.)
PROP. LOAM & SEED (TYP.)
PROP. SLOPE LIMIT (TYP.)
LOCATION LINE OF 1754 COUNTY LAYOUT
PROP. GUARDRAIL, TL-3 (SINGLE FACED)(TYP.)
PROP. COIR FIBER ROLL (TYP.)
(REM)
PROP. LOAM & SEED (TYP.)
BVW ES-H
PROP. SEDIMENT CONTROL BARRIER (TYP.)
PROP. GUARDRAIL, TL-3 (SINGLE FACED)(TYP.)
(REM)
PROP. SLOPE LIMIT (TYP.)
(R&D)
PROP. SAWCUT AND MATCH EXIS
PROP. HMA DRIVEWAY
(R&R)
(RET)
(R&R)
PROP. S.
PROP.

WORCESTER ROAD (ROUTE 140)
(PUBLIC - 1754 COUNTY LAYOUT)

Δ=24° 33' 54"
L=327.99' R=765.00'
PROP. FULLDEPTH RECONSTRUCTION
Δ=6° 23' 21"
L=85.30' R=765.00'
PT +98.15
PT +98.15 N 79° 18' 58" W 467.99'

PROP. LIMIT OF CLEARING
PAVEMENT MILLING MULCH
PROP. 5' HMA APRON
PROP. GRAVEL DRIVEWAY
MATCH EXISTING
PROP. 5' HMA APRON
PROP. GRAVEL DRIVEWAY
MATCH EXISTING
BVW ES-I
PROP. HMA DRIVEWAY
PROP. SAWCUT AND MATCH EXISTING
PROP. HOT MIX ASPHALT BERM STA. 50+20± - STA. 51+13
PROP. HOT MIX ASPHALT BERM STA. 50+20±
PROP. BEGIN HOT MIX ASPHALT BERM STA. 52+61±
PROP. SEDIMENT CONTROL BARRIER (TYP.)
(R&R)
PROP. SLOPE LIMIT (TYP.)

N/F
NICKOLAS A. JAKOULOV AND
KANDACE M. JAKOULOV
PARCEL ID 172-7
BOOK 9990 PAGE 148
230 WORCESTER RD

N/F
EUGENE R. LEBLANC, TRUSTEE OF
THE WORCESTER
ROAD REALTY TRUST
PARCEL ID 172-6
BOOK 8735 PAGE 58
232 WORCESTER RD

N/F
EUGENE R. LEBLANC, TRUSTEE OF
THE WORCESTER ROAD REALTY TRUST
PARCEL ID 172-5
BOOK 8407 PAGE 113
226 WORCESTER RD

N/F
EUGENE R. LEBLANC, TRUSTEE
THE WORCESTER ROAD REALTY
PARCEL ID 172-2
BOOK 8169 PAGE 271
224 WORCESTER RD

LEGEND

- VEGETATED WETLAND (VW)
- BANK/MAHW/OHW
- PERMANENT VW IMPACT AREA
- TEMPORARY VW IMPACT AREA
- WETLAND REPLICATION AREA
- PERMANENT LUW/WATERWAYS IMPACT AREA
- TEMPORARY LUW/WATERWAYS IMPACT AREA

20 0 20 40
SCALE IN FEET

WQC/ACOE IMPACTS 8 OF 14

WESTMINSTER, MA

RECONSTRUCTION OF ROUTE 140 (WORCESTER ROAD)
FROM PATRICIA ROAD TO THE PRINCETON T.L.

PREPARED BY:	PREPARED FOR:
GREEN INTERNATIONAL AFFILIATES, INC. CIVIL AND STRUCTURAL ENGINEERS 239 LITTLETON RD, WESTFORD, MA (978) 923-0400 24 ALBION RD, LINCOLN, RI (401) 305-7895	TOWN OF WESTMINSTER DEPARTMENT OF PUBLIC WORKS WESTMINSTER TOWN HALL 2 OAKMONT AVENUE WESTMINSTER, MA 01473 (978) 874-5572
SCALE: AS NOTED	MASSDOT PROJECT NO. 607432 GREEN PROJECT NO. 17025.02
DATE: 08/24/2022 REVISED:	DRAWN BY: OF CHECKED BY: DS

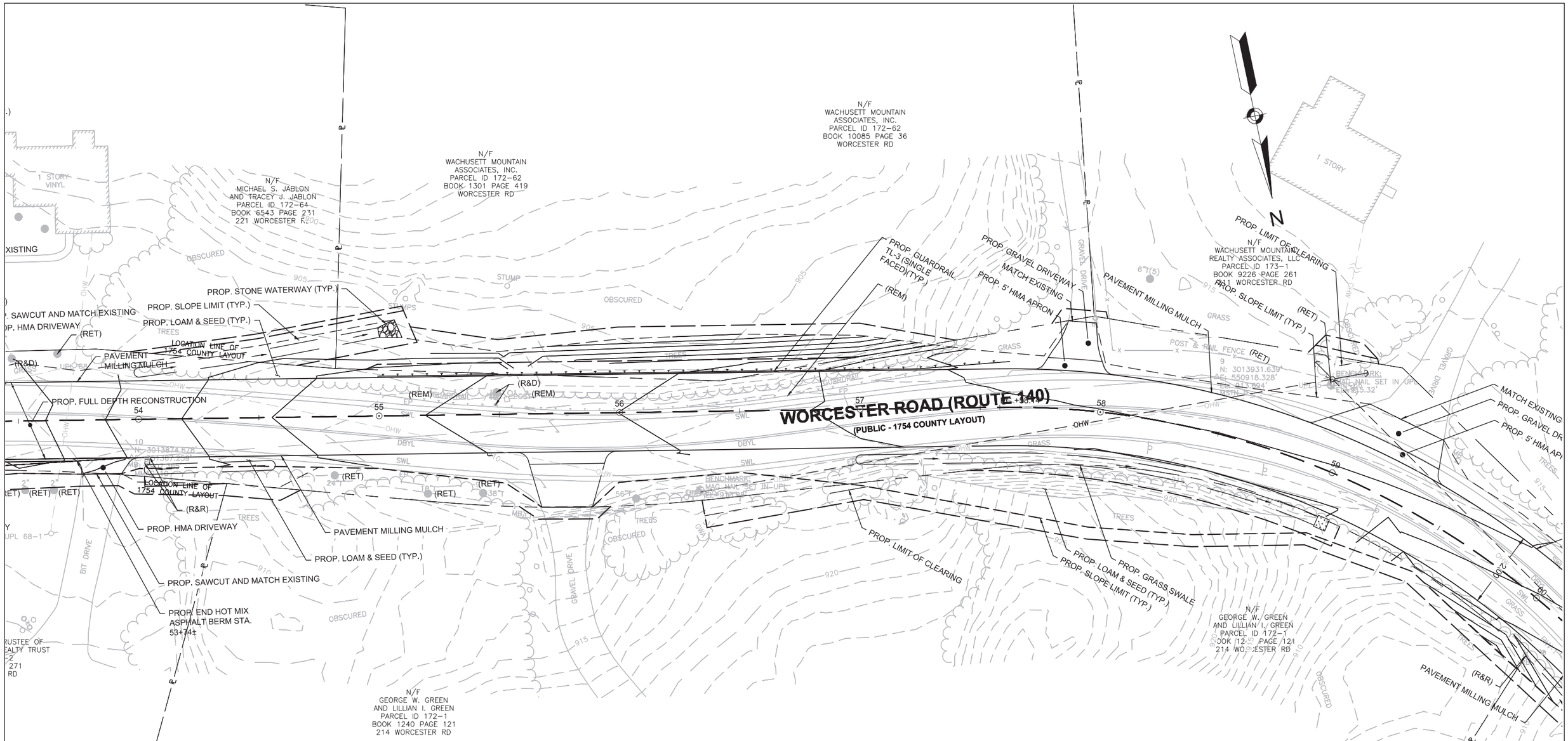

LEGEND

- VEGETATED WETLAND (VW)
- BANK/MAHW/OHW
- PERMANENT VW IMPACT AREA
- TEMPORARY VW IMPACT AREA
- WETLAND REPLICATION AREA
- PERMANENT LUW/WATERWAYS IMPACT AREA
- TEMPORARY LUW/WATERWAYS IMPACT AREA

20 0 20 40
SCALE IN FEET

WQC/ACOE PLANS SHEET 16 OF 57

WQC/ACOE IMPACTS 9 OF 14

WESTMINSTER, MA

RECONSTRUCTION OF ROUTE 140 (WORCESTER ROAD)
FROM PATRICIA ROAD TO THE PRINCETON T.L.

PREPARED BY:	PREPARED FOR:
GREEN INTERNATIONAL AFFILIATES, INC. CIVIL AND STRUCTURAL ENGINEERS 239 LITTLETON RD, WESTFORD, MA (978) 923-0400 24 ALBION RD, LINCOLN, RI (401) 305-7895	TOWN OF WESTMINSTER DEPARTMENT OF PUBLIC WORKS WESTMINSTER TOWN HALL 2 OAKMONT AVENUE WESTMINSTER, MA 01473 (978) 874-5572
SCALE: AS NOTED	MASSDOT PROJECT NO. 607432 GREEN PROJECT NO. 17025.02
DATE: 08/24/2022 REVISED:	DRAWN BY: OF CHECKED BY: DS

N/F
WOODLAND HILLS REALTY TRUST,
LYDIA A. BLANCHE TRUSTEE
PARCEL ID 173-2-1
BOOK 8170 PAGE 20
WORCESTER RD

N/F
BOBBIE JO STANKAITIS
PARCEL ID 173-2
BOOK 8541 PAGE 186
205 WORCESTER RD

N/F
WALTER O. BRIGHAM
AND MARY BRIGHAM
PARCEL ID 162-4
BOOK 6876 PAGE 359
196 WORCESTER RD

N/F
WALTER O. BRIGHAM
AND MARY BRIGHAM
PARCEL ID 162-4
BOOK 6876 PAGE 359
196 WORCESTER RD

WORCESTER ROAD (ROUTE 140)
(PUBLIC - 1754 COUNTY LAYOUT)

PROP. LIMIT OF CLEA

PROP. COIR FIBER ROLL (TYP.)
PROP. GUARDRAIL, TL-3 (SINGLE FACED)(TYP.)
LUW ES-L
IMPACT (PERM.) = 617 SF
IMPACT (TEMP.) =159 SF
PROP. FLOATING SILT FENCE (TYP.)
SEE NOTE 1 ON SHEET 16 FOR PROP. GUARDRAIL INSTALLATION
TEMP.CONTROL OF WATER (TYP.)
PROP. COMPOST AND SEED OVER MODIFIED ROCK FILL
PROP. SEDIMENT CONTROL BARRIER (TYP.)
PROP. LOAM & SEED (TYP.)
PROP. SLOPE LIMIT (TYP.)
PROP. SEDIMENT CONTROL BARRIER (TYP.) - TO BE INSTALLED AFTER LOAM APPLICATION AND PRIOR TO SEEDING
PROP. BEGIN HOT MIX ASPHALT BERM STA. 65+10±
BVW ES-L
IMPACT (PERM.) = 469 SF
IMPACT (TEMP.) = 73 SF
PAVEMENT MILLING MULCH
(R&D)
(REM)
(RET)
(R&D)
(R&D)
(R&D)
(R&R)
PAVEMENT MILLING MULCH
MATCH EXISTING
PROP. GRAVEL DRIVEWAY
PROP. 5' HMA APRON
PAVEMENT MILLING MULCH
PROP. LIMIT OF CLEARING
RET. STONE WALL
LOCATION LINE OF 1754 COUNTY LAYOUT
(RET) WALL AND BUSHES
PROP. FULL DEPTH RECONSTRUCTION
PT +24.87
PC +72.21
PC +29.79
LUW ES-K-L (CULVERT 3)
IMPACT (TEMP.) = 375 LF
DREDGE VOLUME: 200 CY
PROP. DUMPED RIPRAP
PROP. 5' x 6' BOX CULVERT
INV. UPSTREAM=897.02
INV. DOWNSTREAM=896.36
INV.= 901.00±
PROP HW
ELEV=903.00±
BVW ES-K
IMPACT (PERM.) = 75 SF
IMPACT (TEMP.) = 101 SF
PROP. COIR FIBER ROLL (TYP.)
SS-4
SEE NOTE 1 ON SHEET 16 FOR PROP. GUARDRAIL INSTALLATION
PROP. DUMPED RIPRAP
PROP. FLOATING SILT FENCE (TYP.)
LUW ES-K
IMPACT (PERM.) 460 SF
IMPACT (TEMP.) = 14 SF
PROP. COMPOST AND SEED OVER MODIFIED ROCK FILL
PROP. SEDIMENT CONTROL BARRIER (TYP.)
PROP. GUARDRAIL, TL-3 (SINGLE FACED)(TYP.)
(REM)
PROP. LIMIT OF CLEARING
PROP. SLOPE LIMIT (TYP.)
PROP. LOAM & SEED (TYP.)
PROP. CLEARING & GRUBBING STA. 55+87 RT - STA. 69+72 RT
PROP. BEGIN HOT MIX ASPHALT BERM STA. 65+10
PROP. BEGIN HOT MIX ASPHALT BERM STA. 60+50±
PROP. SEDIMENT CONTROL BARRIER (TYP.)
LOCATION LINE OF 1754 COUNTY LAYOUT
60
61
62
63
64
66
+35

LEGEND

- VEGETATED WETLAND (VW)
- BANK/MAHW/OHW
- PERMANENT VW IMPACT AREA
- TEMPORARY VW IMPACT AREA
- WETLAND REPLICATION AREA
- PERMANENT LUW/WATERWAYS IMPACT AREA
- TEMPORARY LUW/WATERWAYS IMPACT AREA

20 0 20 40
SCALE IN FEET

WQC/ACOE IMPACTS 10 OF 14

WESTMINSTER, MA

RECONSTRUCTION OF ROUTE 140 (WORCESTER ROAD)
FROM PATRICIA ROAD TO THE PRINCETON T.L.

PREPARED BY:	PREPARED FOR:
GREEN INTERNATIONAL AFFILIATES, INC. CIVIL AND STRUCTURAL ENGINEERS 239 LITTLETON RD, WESTFORD, MA (978) 923-0400 24 ALBION RD, LINCOLN, RI (401) 305-7895	TOWN OF WESTMINSTER DEPARTMENT OF PUBLIC WORKS WESTMINSTER TOWN HALL 2 OAKMONT AVENUE WESTMINSTER, MA 01473 (978) 874-5572
SCALE: AS NOTED	MASSDOT PROJECT NO. 607432 GREEN PROJECT NO. 17025.02
DATE: 08/24/2022 REVISED:	DRAWN BY: OF CHECKED BY: DS

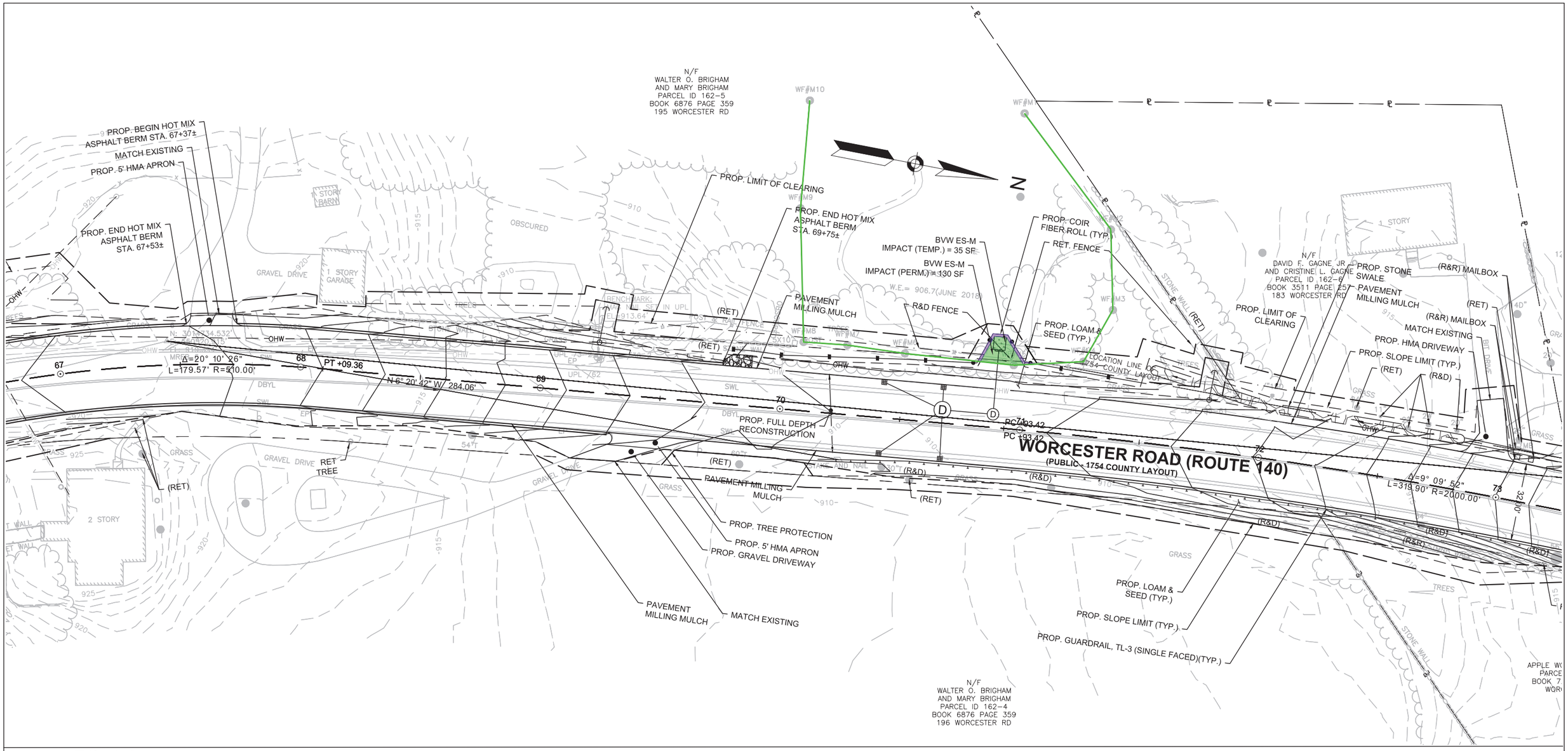

LEGEND

- VEGETATED WETLAND (VW)
- BANK/MAHW/OHW
- PERMANENT VW IMPACT AREA
- TEMPORARY VW IMPACT AREA
- WETLAND REPLICATION AREA
- PERMANENT LUW/WATERWAYS IMPACT AREA
- TEMPORARY LUW/WATERWAYS IMPACT AREA

20 0 20 40
SCALE IN FEET

WQC/ACOE IMPACTS 11 OF 14

WESTMINSTER, MA

RECONSTRUCTION OF ROUTE 140 (WORCESTER ROAD)
FROM PATRICIA ROAD TO THE PRINCETON T.L.

PREPARED BY:	PREPARED FOR:
GREEN INTERNATIONAL AFFILIATES, INC. CIVIL AND STRUCTURAL ENGINEERS 239 LITTLETON RD, WESTFORD, MA (978) 923-0400 24 ALBION RD, LINCOLN, RI (401) 305-7895	TOWN OF WESTMINSTER DEPARTMENT OF PUBLIC WORKS WESTMINSTER TOWN HALL 2 OAKMONT AVENUE WESTMINSTER, MA 01473 (978) 874-5572
SCALE: AS NOTED	MASSDOT PROJECT NO. 607432 GREEN PROJECT NO. 17025.02
DATE: 08/24/2022 REVISED:	DRAWN BY: OF CHECKED BY: DS

N/F
DAVID F. GAGNE JR
AND CRISTINE L. GAGNE
PARCEL ID 162-7
BOOK 3043 PAGE 108
179 WORCESTER RD

PROP. LIMIT OF CLEARING

(R&R) STONE WALL

PROP. STONE SWALE & SUBDRAIN

PAVEMENT MILLING MULCH

PROP. LOAM & SEED (TYP.)

S 23° 52' 30" W 22.28'

PT +83.28

PT +13.32

N 2° 49' 10" E 218.53'

PC +31.85

LOCATION LINE OF 1754 COUNTY LAYOUT

PAVEMENT MILLING MULCH

N/F
APPLE WOOD ACRES LLC
PARCEL ID 162-2
BOOK 7254 PAGE 221
WORCESTER RD

N/F
WILLIAM O. WINTTURI
PARCEL ID 162-3
BOOK 7254 PAGE 200
174 WORCESTER RD

PT +34.27

SEE PROFILE & CROSS SECTION ON SHEET 110

PT +84.27

PROP. GRAVEL DRIVE

PC +05.56

PT +83.28

PC +37.13

S 76° 44' 56" W 37.13'
Δ=13° 06' 00"
L=174.93' R=765.00'

N/F
WACHUSETT MOUNTAIN REALTY ASSOCIATES
PARCEL ID 162-8
BOOK 2273 PAGE 199
175 WORCESTER RD

(REM)

REM & CLOSE EXIST. GRAVEL DRIVEWAY

PROP. SLOPE LIMIT (TYP.)

PROP. 10' HMA APRON

PROP. END HOT MIX ASPHALT BERM STA. 77+21±

LOCATION LINE OF 1779 COUNTY LAYOUT

PROP. FULL DEPTH RECONSTRUCTION

WORCESTER ROAD (ROUTE 140)
(PUBLIC - 1754 COUNTY LAYOUT)

HONEY BEE LANE
(PRIVATE)

(REM) CEM CONC WALK

PROP. END HOT MIX ASPHALT BERM STA. 79+27±

LOCATION LINE OF DECEMBER 30, 1964 TOWN LAYOUT (SHLO NO. 1543B)

LOCATION LINE OF 1779 COUNTY LAYOUT

PROP. LOAM & SEED (TYP.)

PROP. SLOPE LIMIT (TYP.)

PROP. GUARDRAIL, TL-3 (SINGLE FACED)(TYP.)

PROP. LIMIT OF CLEARING

LIMIT OF FULL DEPTH RECONSTRUCTION
BEGIN MICROMILLING AND RESURFACING
STA. 400+55.00

LIMIT OF WORK
LIMIT OF MICROMILLING AND RESURFACING
STA. 400+80.00

N/F
APPLE WOOD ACRES LLC
PARCEL ID 162-2
BOOK 7254 PAGE 221

LEGEND

- VEGETATED WETLAND (VW)
- BANK/MAHW/OHW
- PERMANENT VW IMPACT AREA
- TEMPORARY VW IMPACT AREA
- WETLAND REPLICATION AREA
- PERMANENT LUW/WATERWAYS IMPACT AREA
- TEMPORARY LUW/WATERWAYS IMPACT AREA

20 0 20 40
SCALE IN FEET

WQC/ACOE PLANS SHEET 19 OF 57

WQC/ACOE IMPACTS 12 OF 14

WESTMINSTER, MA

RECONSTRUCTION OF ROUTE 140 (WORCESTER ROAD)
FROM PATRICIA ROAD TO THE PRINCETON T.L.

PREPARED BY:	PREPARED FOR:
GREEN INTERNATIONAL AFFILIATES, INC. CIVIL AND STRUCTURAL ENGINEERS 239 LITTLETON RD, WESTFORD, MA (978) 923-0400 24 ALBION RD, LINCOLN, RI (401) 305-7895	TOWN OF WESTMINSTER DEPARTMENT OF PUBLIC WORKS WESTMINSTER TOWN HALL 2 OAKMONT AVENUE WESTMINSTER, MA 01473 (978) 874-5572
SCALE: AS NOTED	MASSDOT PROJECT NO. 607432 GREEN PROJECT NO. 17025.02
DATE: 08/24/2022 REVISED:	DRAWN BY: OF CHECKED BY: DS

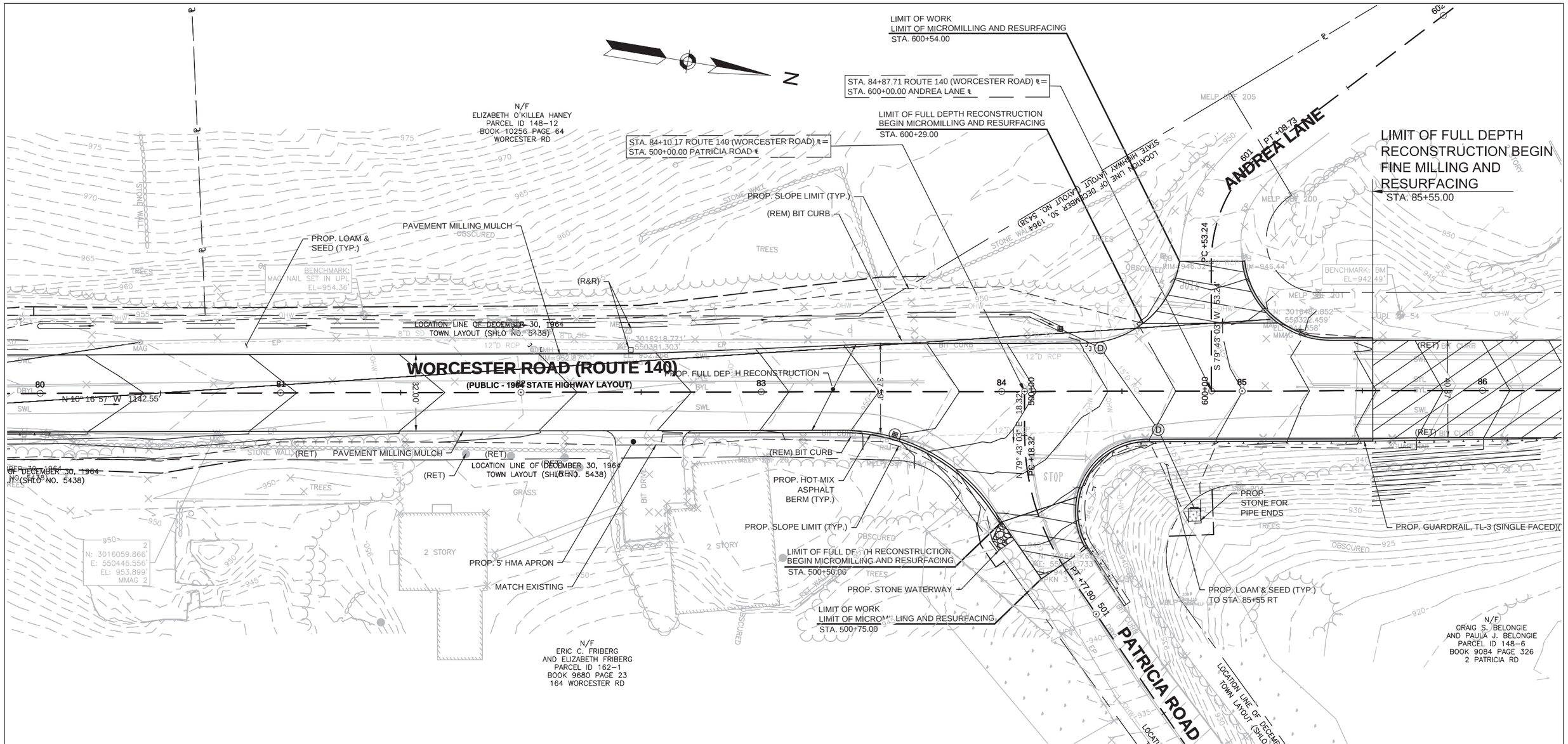

LEGEND

- VEGETATED WETLAND (VW)
- BANK/MAHW/OHW
- PERMANENT VW IMPACT AREA
- TEMPORARY VW IMPACT AREA
- WETLAND REPLICATION AREA
- PERMANENT LUW/WATERWAYS IMPACT AREA
- TEMPORARY LUW/WATERWAYS IMPACT AREA

20 0 20 40
SCALE IN FEET

WQC/ACOE IMPACTS 13 of 14

WESTMINSTER, MA

RECONSTRUCTION OF ROUTE 140 (WORCESTER ROAD)
FROM PATRICIA ROAD TO THE PRINCETON T.L.

PREPARED BY:	PREPARED FOR:
GREEN INTERNATIONAL AFFILIATES, INC. CIVIL AND STRUCTURAL ENGINEERS 239 LITTLETON RD, WESTFORD, MA (978) 923-0400 24 ALBION RD, LINCOLN, RI (401) 305-7895	TOWN OF WESTMINSTER DEPARTMENT OF PUBLIC WORKS WESTMINSTER TOWN HALL 2 OAKMONT AVENUE WESTMINSTER, MA 01473 (978) 874-5572
SCALE: AS NOTED	MASSDOT PROJECT NO. 607432 GREEN PROJECT NO. 17025.02
DATE: 08/24/2022 REVISED:	DRAWN BY: OF CHECKED BY: DS

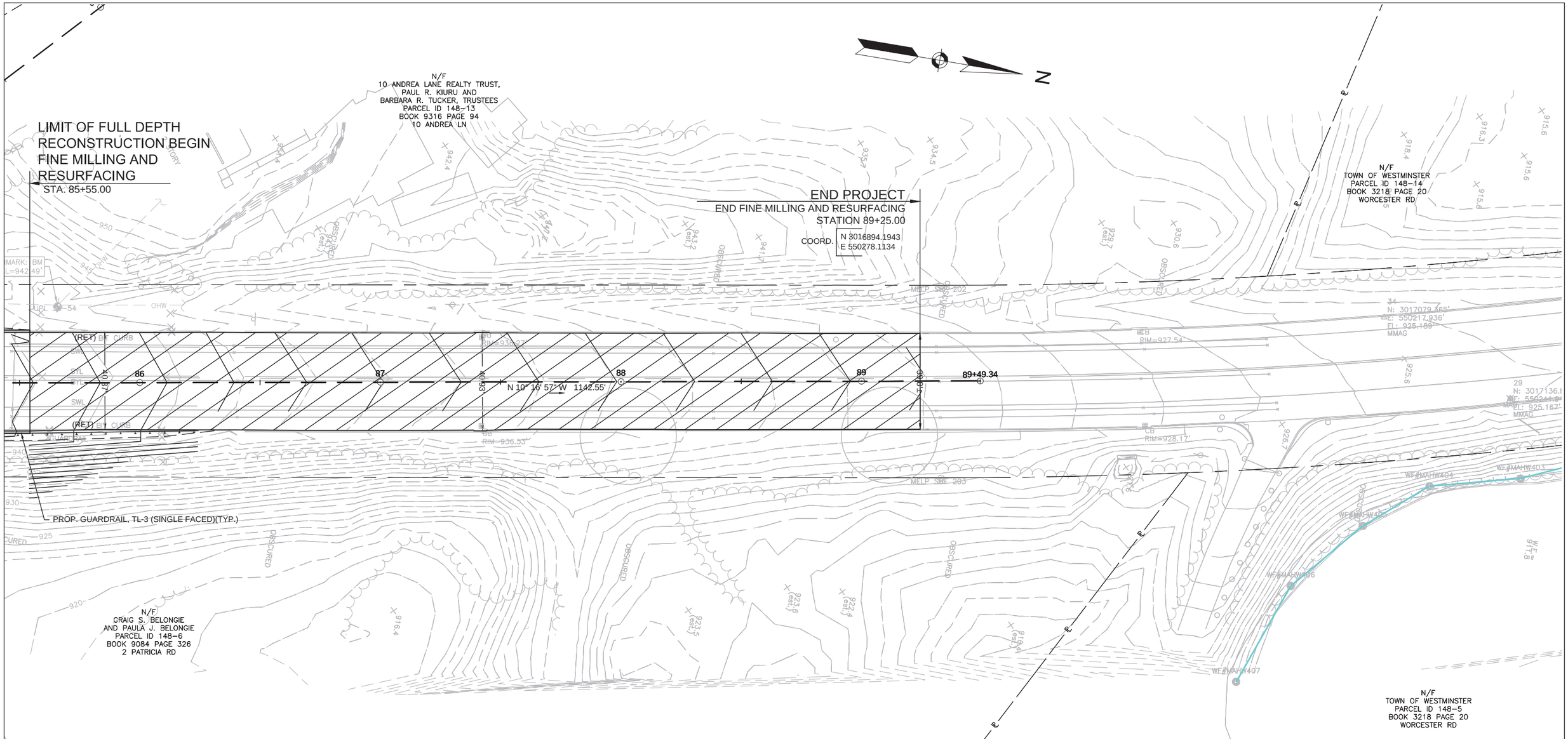

LEGEND

- VEGETATED WETLAND (VW)
- BANK/MAHW/OHW
- PERMANENT VW IMPACT AREA
- TEMPORARY VW IMPACT AREA
- WETLAND REPLICATION AREA
- PERMANENT LUW/WATERWAYS IMPACT AREA
- TEMPORARY LUW/WATERWAYS IMPACT AREA

20 0 20 40
SCALE IN FEET

WQC/ACOE PLANS SHEET 21 OF 57

WQC/ACOE IMPACTS 14 of 14

WESTMINSTER, MA

RECONSTRUCTION OF ROUTE 140 (WORCESTER ROAD)
FROM PATRICIA ROAD TO THE PRINCETON T.L.

PREPARED BY:	PREPARED FOR:
GREEN INTERNATIONAL AFFILIATES, INC. CIVIL AND STRUCTURAL ENGINEERS 239 LITTLETON RD, WESTFORD, MA (978) 923-0400 24 ALBION RD, LINCOLN, RI (401) 305-7895	TOWN OF WESTMINSTER DEPARTMENT OF PUBLIC WORKS WESTMINSTER TOWN HALL 2 OAKMONT AVENUE WESTMINSTER, MA 01473 (978) 874-5572
SCALE: AS NOTED	MASSDOT PROJECT NO. 607432 GREEN PROJECT NO. 17025.02
DATE: 08/24/2022 REVISED:	DRAWN BY: OF CHECKED BY: DS

WESTMINSTER, MA
ROUTE 140 (WORCESTER ROAD)

STATE	FED. AID PROJ. NO.	SHEET NO.	TOTAL SHEETS
MA	-	66	215
PROJECT FILE NO.	607432		

DRAINAGE AND UTILITY PLANS (1 OF 15)

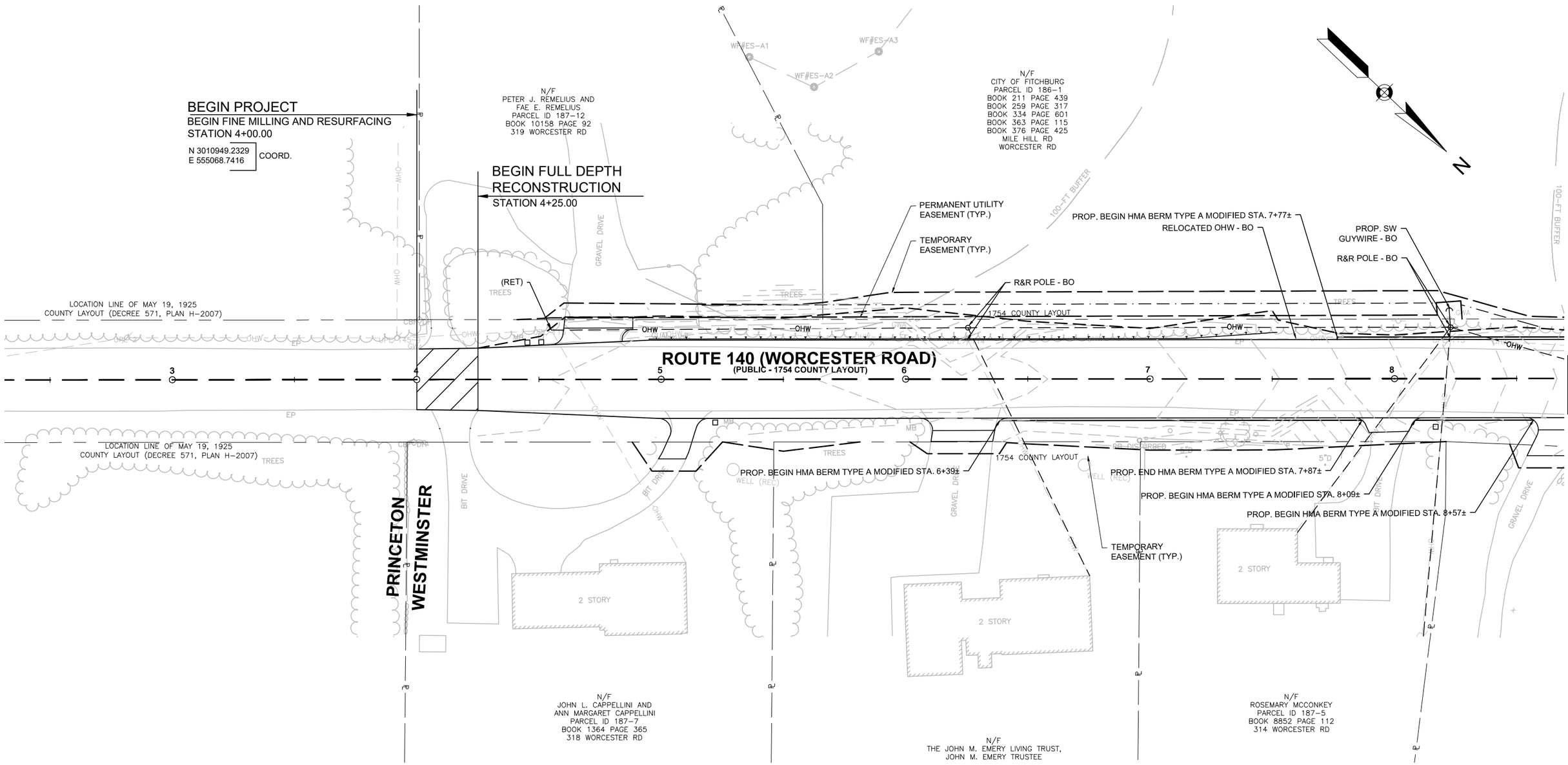

NOTES:

1. ALL PROPOSED CATCH BASINS SHALL BE DEEP SUMP CATCH BASINS WITH HOOD.
2. DRAINAGE ELEVATIONS ARE PROVIDED FOR DESIGN PURPOSES ONLY. THE CONTRACTOR SHALL VERIFY BY TEST PIT, THE LOCATIONS OF EXISTING UTILITIES WHICH MAY CONFLICT WITH THE PROPOSED DRAINAGE DESIGN. FIELD ADJUSTMENTS WILL BE MADE AS APPROVED OR AS REQUIRED BY THE ENGINEER. ONLY AFTER THE CONTRACTOR VERIFIES ELEVATIONS FOR CONTSRUCTABILITY OF THE DRAINAGE SYSTEM SHALL ANY STRUCTURES BE ORDERED. ANY FIELD ADJUSTMENTS TO DRAIN LINE UP TO 5 FEET OF DEPTH IS INCLUDED IN THE COST OF PIPE.
3. FOR DOUBLE GRATE CATCH BASIN REFER TO DETAIL SHEET.
4. 4" HEAVY DUTY FRAME AND GRATE TO BE USED FOR FLAT TOP DRAINAGE STRUCTURES WHERE DISTANCE BETWEEN TOP OF PIPE AND GROUND IS 2 FEET OR LESS.
5. REMOVAL OF EXISTING PIPES AND CULVERTS ARE INCIDENTAL TO THE WORK.

0 20 50 100
SCALE: 1" = 40'

WQC/ACOE PLANS SHEET 22 OF 57

FOR PROFILE:
SEE SHEET NO. 26

WESTMINSTER, MA
ROUTE 140 (WORCESTER ROAD)

STATE	FED. AID PROJ. NO.	SHEET NO.	TOTAL SHEETS
MA	-	67	215
PROJECT FILE NO.	607432		

DRAINAGE AND UTILITY PLANS (2 OF 15)

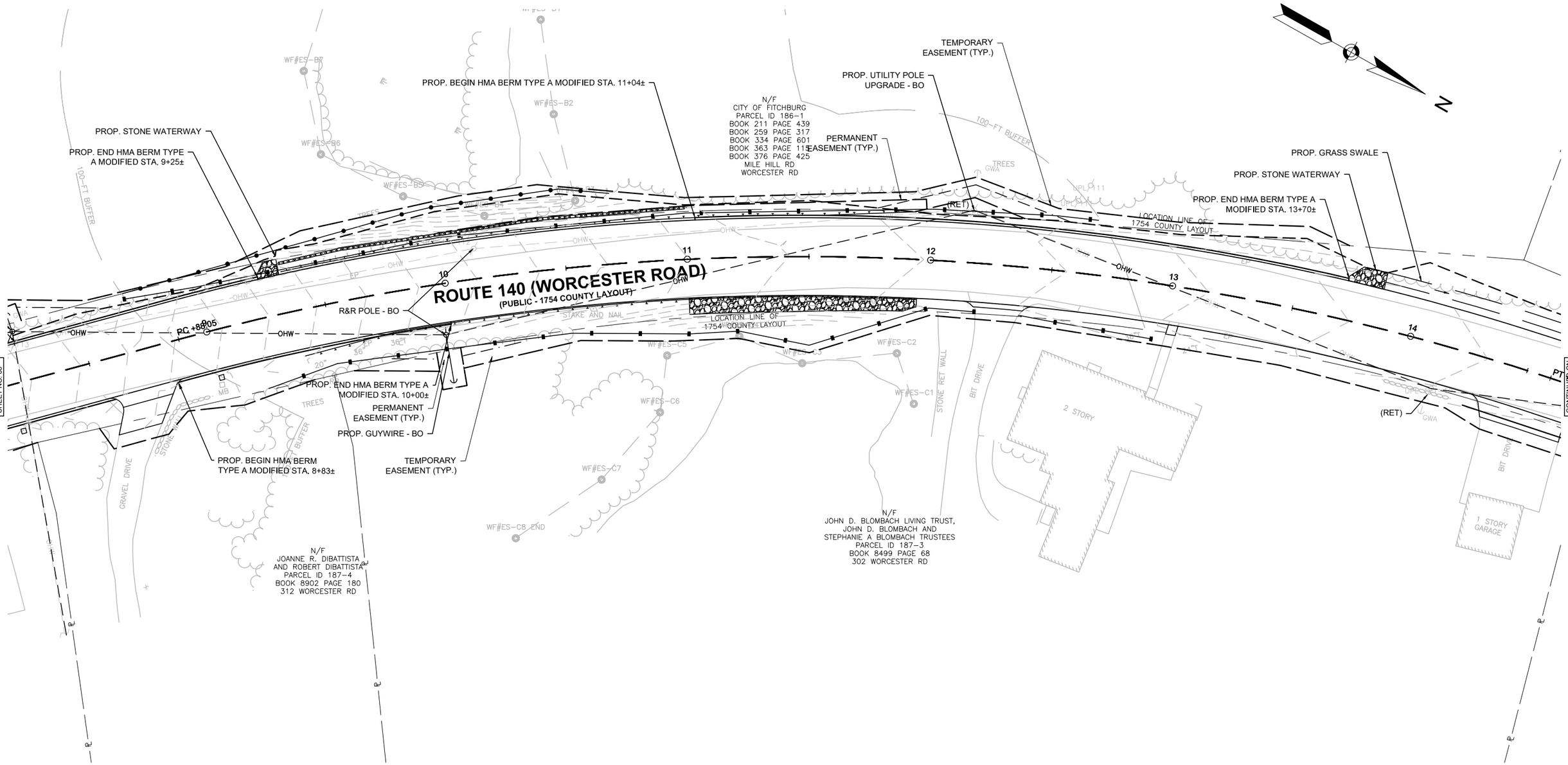

0 20 50 100
SCALE: 1" = 40'

WQC/ACOE PLANS SHEET 23 OF 57

FOR PROFILE:
SEE SHEET NO. 27

607432_HD10(DRAINAGE AND UTILITY PLANS).DWG Plotted on 23-Aug-2022 3:06 PM

WESTMINSTER, MA
ROUTE 140 (WORCESTER ROAD)

STATE	FED. AID PROJ. NO.	SHEET NO.	TOTAL SHEETS
MA	-	68	215
PROJECT FILE NO.	607432		

DRAINAGE AND UTILITY PLANS (3 OF 15)

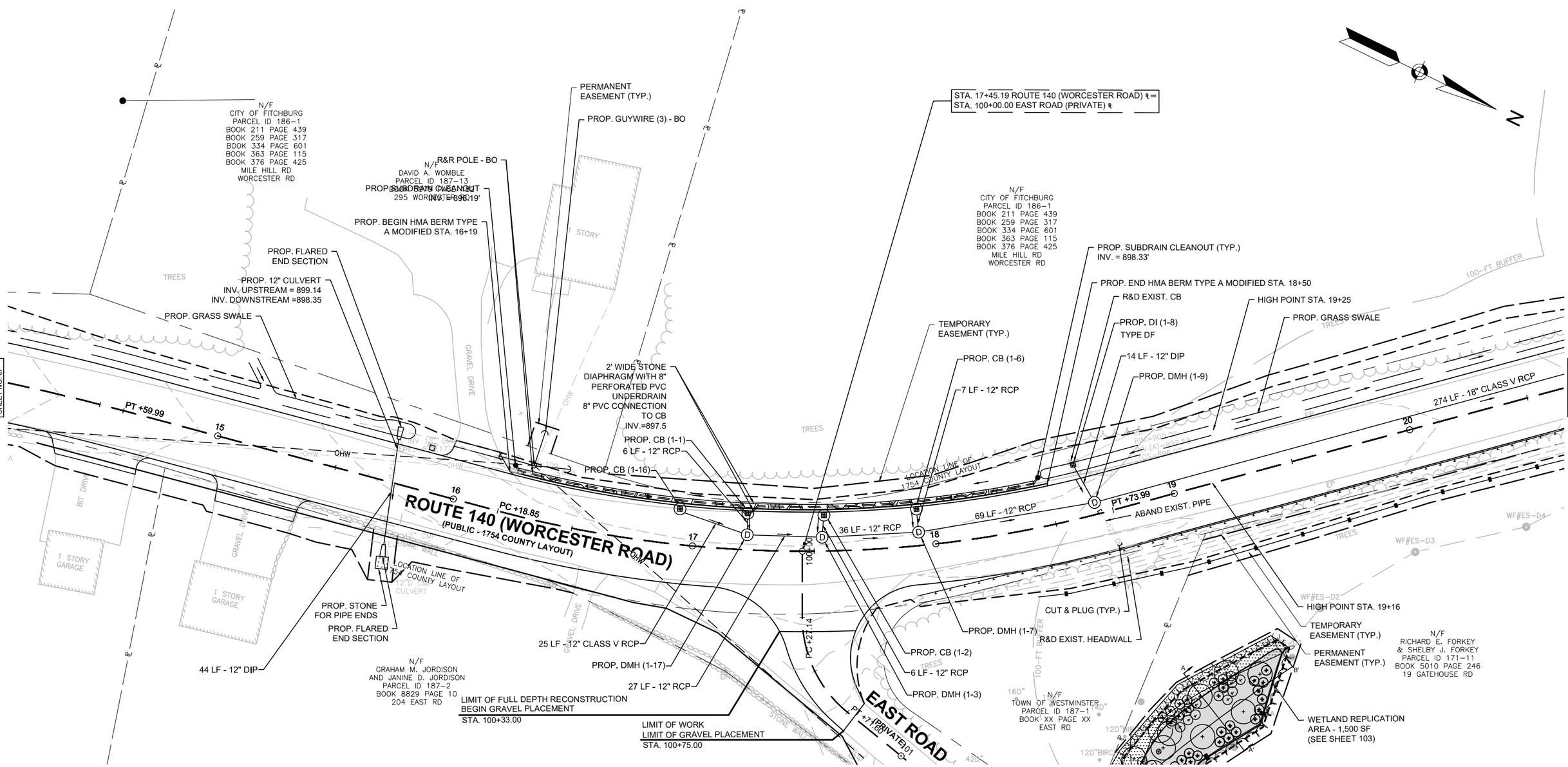

DRAINAGE STRUCTURE TABLE						
NAME/TYPE	STATION	OFFSET	RIM ELEV.	INV. ELEV. IN	INV. ELEV. OUT	REMARKS
PROP. CB (1-1)	17+22.06	16.0 L	900.21	I=897.21' (PROP. 8" SUB DRAINS)	I=896.25' (PROP. DMH (1-17))	FLAT TOP
PROP. CB (1-2)	17+54.26	15.7 L	900.22		I=896.05' (PROP. DMH (1-3))	
PROP. CB (1-6)	17+93.45	16.0 L	900.35		I=896.10' (PROP. DMH (1-7))	
PROP. CB (1-16)	16+93.27	15.6 L	900.24		I=896.50' (PROP. DMH (1-17))	FLAT TOP
PROP. DI (1-8)	18+62.49	22.2 L	899.50		I=896.00' (PROP. DMH (1-9))	FLAT TOP
PROP. DMH (1-3)	17+53.35	5.7 L	900.82	I=895.98' (PROP. CB (1-2)) I=895.95' (PROP. DMH (1-17))	I=895.85' (PROP. DMH (1-7))	FLAT TOP

DRAINAGE STRUCTURE TABLE						
NAME/TYPE	STATION	OFFSET	RIM ELEV.	INV. ELEV. IN	INV. ELEV. OUT	REMARKS
PROP. DMH (1-7)	17+93.45	5.5 L	900.96	I=895.55' (PROP. DMH (1-3)) I=896.00' (PROP. CB (1-6))	I=895.55' (PROP. DMH (1-9))	
PROP. DMH (1-9)	18+67.43	5.0 L	901.36	I=895.05' (PROP. DMH (1-7)) I=895.85' (PROP. DI (1-8))	I=894.75' (PROP. DMH (1-10))	
PROP. DMH (1-17)	17+22.26	6.2 L	900.77	I=896.25' (PROP. CB (1-16)) I=896.15' (PROP. CB (1-1))	I=896.15' (PROP. DMH (1-3))	

0 20 50 100
SCALE: 1" = 40'

FOR PROFILE:
SEE SHEET NO. 28

WESTMINSTER, MA
ROUTE 140 (WORCESTER ROAD)

STATE	FED. AID PROJ. NO.	SHEET NO.	TOTAL SHEETS
MA	-	69	215
PROJECT FILE NO.	607432		

DRAINAGE AND UTILITY PLANS (4 OF 15)

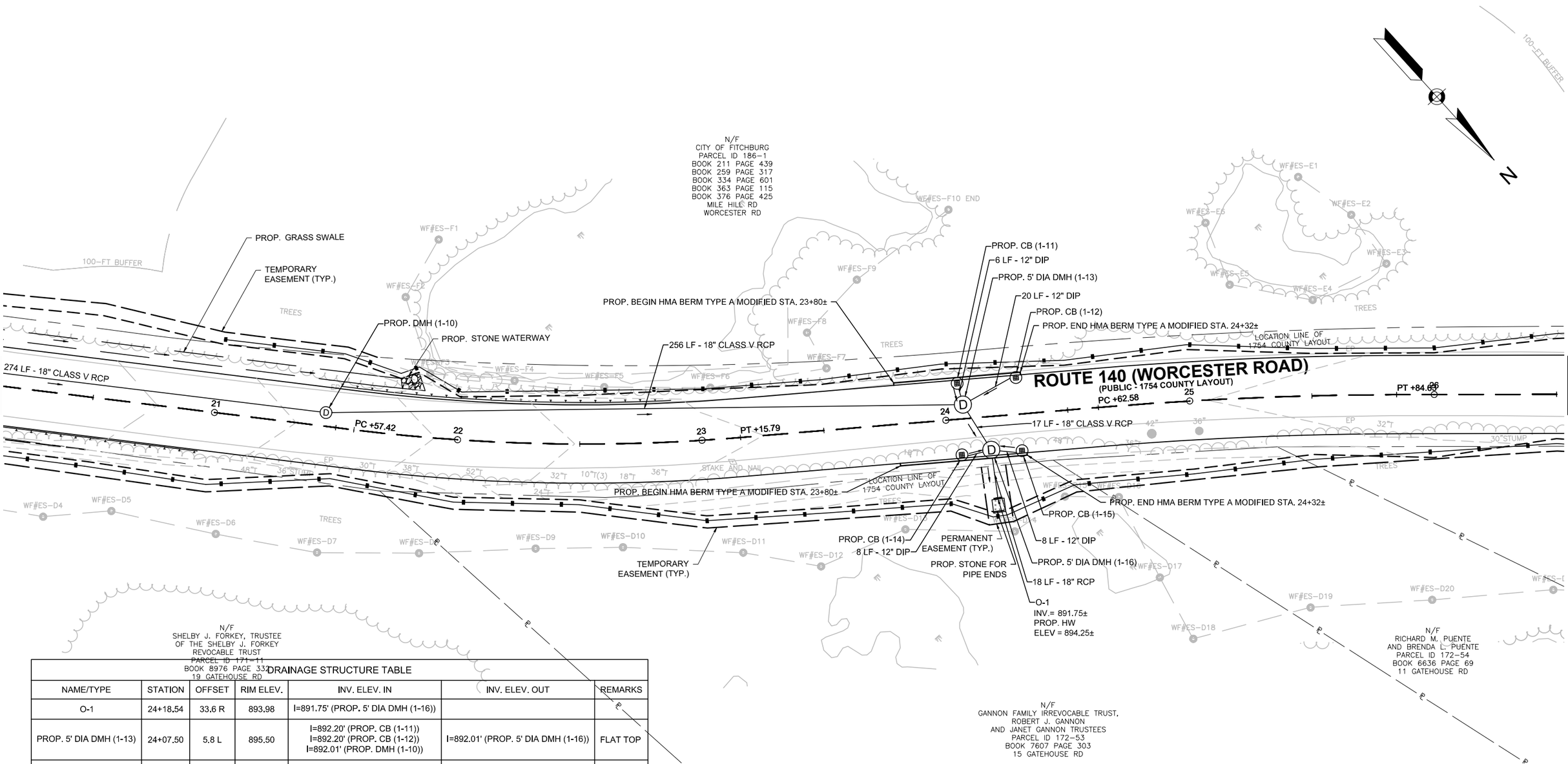

DRAINAGE STRUCTURE TABLE

NAME/TYPE	STATION	OFFSET	RIM ELEV.	INV. ELEV. IN	INV. ELEV. OUT	REMARKS
O-1	24+18.54	33.6 R	893.98	I=891.75' (PROP. 5' DIA DMH (1-16))		
PROP. 5' DIA DMH (1-13)	24+07.50	5.8 L	895.50	I=892.20' (PROP. CB (1-11)) I=892.20' (PROP. CB (1-12)) I=892.01' (PROP. DMH (1-10))	I=892.01' (PROP. 5' DIA DMH (1-16))	FLAT TOP
PROP. 5' DIA DMH (1-16)	24+17.51	13.6 R	895.35	I=892.10' (PROP. CB (1-14)) I=892.10' (PROP. CB (1-15)) I=891.85' (PROP. 5' DIA DMH (1-13))	I=891.85' (O-1)	FLAT TOP
PROP. CB (1-11)	24+05.84	15.6 L	895.30		I=892.30' (PROP. 5' DIA DMH (1-13))	FLAT TOP
PROP. CB (1-12)	24+30	16.0 L	895.32		I=892.30' (PROP. 5' DIA DMH (1-13))	FLAT TOP
PROP. CB (1-14)	24+05.40	15.6 R	895.30		I=892.20' (PROP. 5' DIA DMH (1-16))	FLAT TOP
PROP. CB (1-15)	24+30	16.0 R	895.32		I=892.20' (PROP. 5' DIA DMH (1-16))	FLAT TOP
PROP. DMH (1-10)	21+45.24	5.6 L	898.68	I=893.55' (PROP. DMH (1-9))	I=893.55' (PROP. 5' DIA DMH (1-13))	FLAT TOP

FOR PROFILE:
SEE SHEET NO. 29

DRAINAGE STRUCTURE TABLE

NAME/TYPE	STATION	OFFSET	RIM ELEV.	INV. ELEV. IN	INV. ELEV. OUT	REMARKS
O-2	32+48.34	20.0 R	889.34	I=887.70' (PROP. 5' DIA DEEP SUMP MH (2-6))		
PROP. 5' DIA DEEP SUMP MH (2-6)	32+49.35	13.0 R	891.00	I=887.90' (PROP. GI (2-5)) I=888.00' (PROP. GI (2-4)) I=888.00' (PROP. 5' DIA DEEP SUMP MH (2-3)) I=887.85' (PROP. DMH (2-9))	I=887.75' (O-2)	FLAT TOP
PROP. DEEP SUMP MH (2-8)	31+51.83	7.4 L	891.51	I=888.85' (PROP. GI (2-7))	I=888.85' (PROP. DMH (2-9))	
PROP. DMH (2-9)	32+39.93	5.8 L	891.17	I=888.00' (PROP. DEEP SUMP MH (2-8))	I=888.00' (PROP. 5' DIA DEEP SUMP MH (2-6))	
PROP. GI (2-5)	32+21.88	14.9 R	891.03		I=888.52' (PROP. 5' DIA DEEP SUMP MH (2-6))	
PROP. GI (2-7)	31+49.72	14.7 L	891.37		I=888.87' (PROP. DEEP SUMP MH (2-8))	

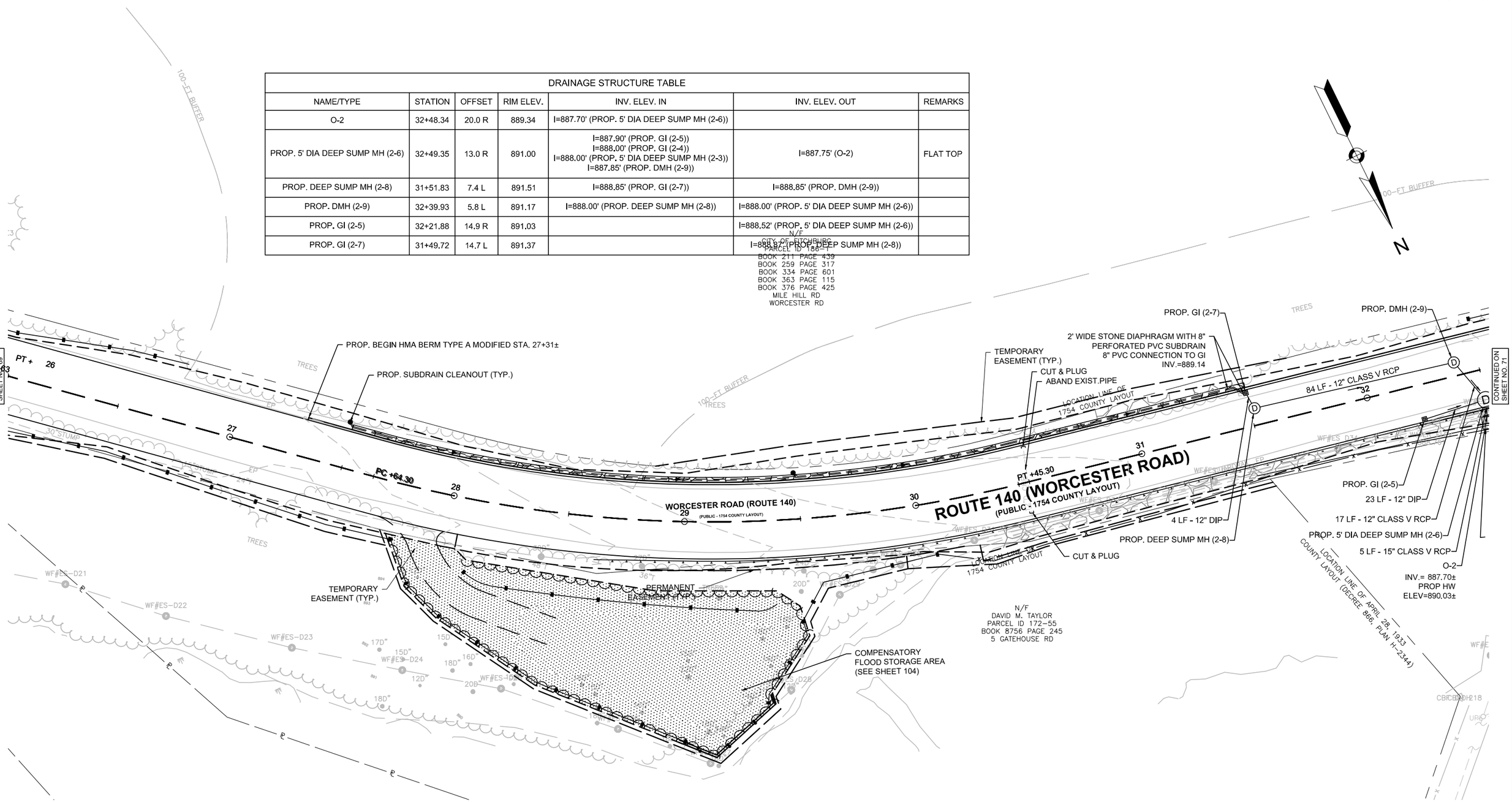

FOR PROFILE:
SEE SHEET NO. 30

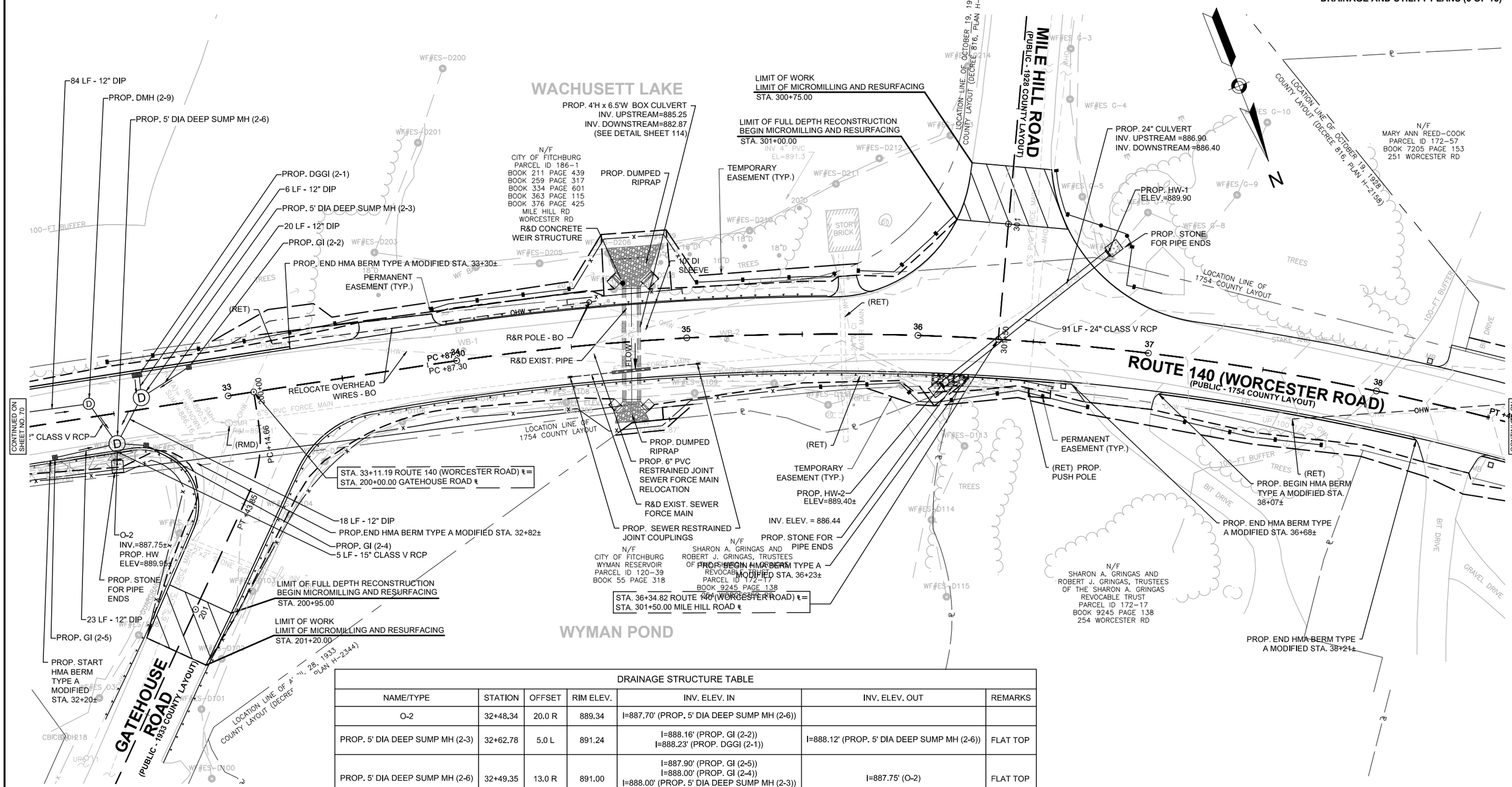

DRAINAGE STRUCTURE TABLE

NAME/TYPE	STATION	OFFSET	RIM ELEV.	INV. ELEV. IN	INV. ELEV. OUT	REMARKS
O-2	32+48.34	20.0 R	889.34	I=887.70' (PROP. 5' DIA DEEP SUMP MH (2-6))		
PROP. 5' DIA DEEP SUMP MH (2-3)	32+62.78	5.0 L	891.24	I=888.16' (PROP. GI (2-2)) I=888.23' (PROP. DGGI (2-1))	I=888.12' (PROP. 5' DIA DEEP SUMP MH (2-6))	FLAT TOP
PROP. 5' DIA DEEP SUMP MH (2-6)	32+49.35	13.0 R	891.00	I=887.90' (PROP. GI (2-5)) I=888.00' (PROP. GI (2-4)) I=888.00' (PROP. 5' DIA DEEP SUMP MH (2-3)) I=887.85' (PROP. DMH (2-9))	I=887.75' (O-2)	FLAT TOP
PROP. DEEP SUMP MH (2-8)	31+51.83	7.4 L	891.51	I=888.85' (PROP. GI (2-7))	I=888.85' (PROP. DMH (2-9))	
PROP. DGGI (2-1)	32+63.38	15.0 L	891.21		I=888.71' (PROP. 5' DIA DEEP SUMP MH (2-3))	
PROP. DMH (2-9)	32+39.93	5.8 L	891.17	I=888.00' (PROP. DEEP SUMP MH (2-8))	I=888.00' (PROP. 5' DIA DEEP SUMP MH (2-6))	
PROP. GI (2-2)	32+85.10	14.9 L	891.23		I=888.73' (PROP. 5' DIA DEEP SUMP MH (2-3))	
PROP. GI (2-4)	32+61.68	15.7 R	890.94		I=888.46' (PROP. 5' DIA DEEP SUMP MH (2-6))	
PROP. GI (2-5)	32+21.88	14.9 R	891.03		I=888.52' (PROP. 5' DIA DEEP SUMP MH (2-6))	

FOR PROFILE:
SEE SHEET NO. 31

WESTMINSTER, MA
ROUTE 140 (WORCESTER ROAD)

STATE	FED. AID PROJ. NO.	SHEET NO.	TOTAL SHEETS
MA	-	72	215
PROJECT FILE NO.	607432		

DRAINAGE AND UTILITY PLANS (7 OF 15)

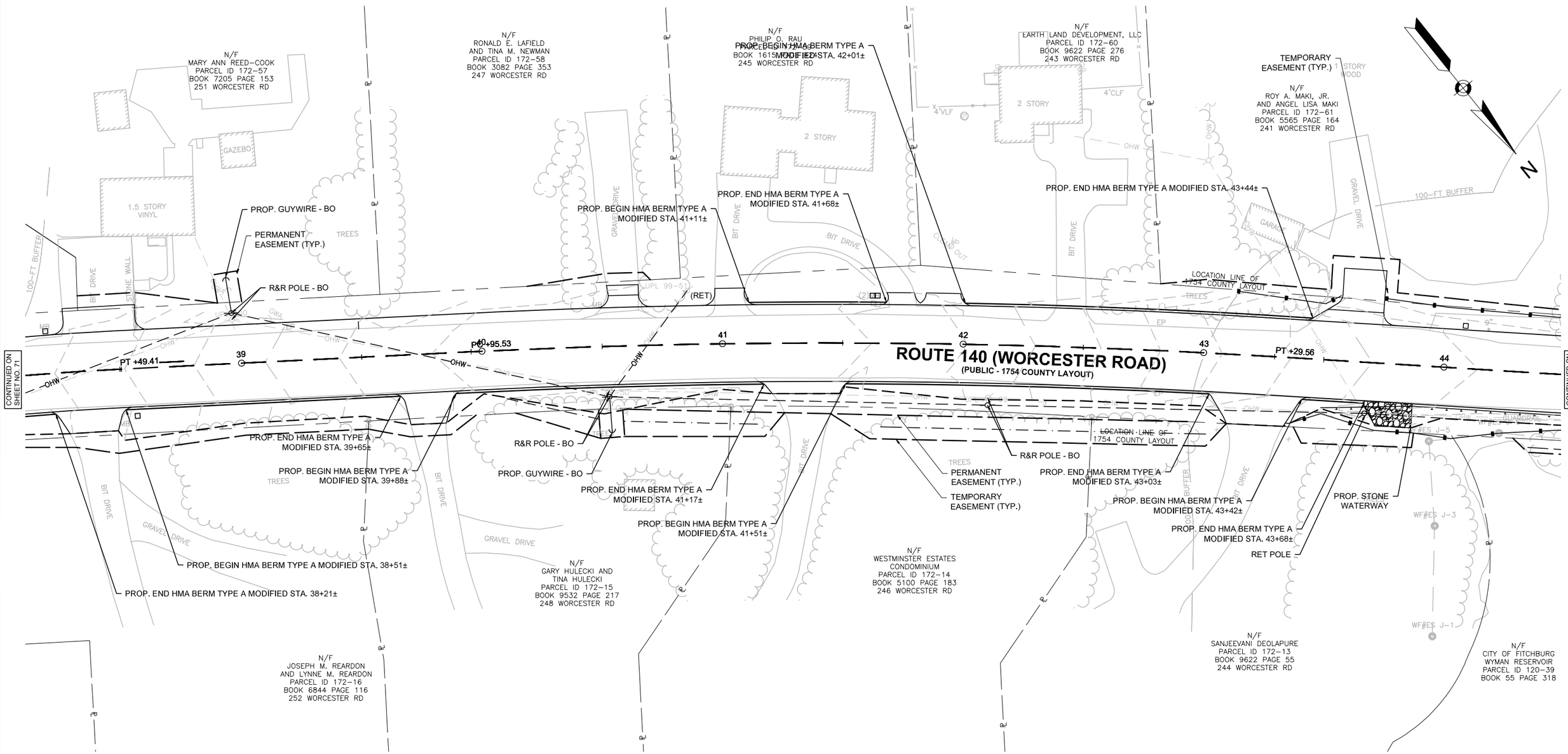

0 20 50 100
SCALE: 1" = 40'

WQC/ACOE PLANS SHEET 28 OF 57

FOR PROFILE:
SEE SHEET NO. 32

607432_HD10(DRAINAGE AND UTILITY PLANS).DWG Plotted on: 23-Aug-2022 3:06 PM

WESTMINSTER, MA
ROUTE 140 (WORCESTER ROAD)

STATE	FED. AID PROJ. NO.	SHEET NO.	TOTAL SHEETS
MA	-	73	215
PROJECT FILE NO.	607432		

DRAINAGE AND UTILITY PLANS (8 OF 15)

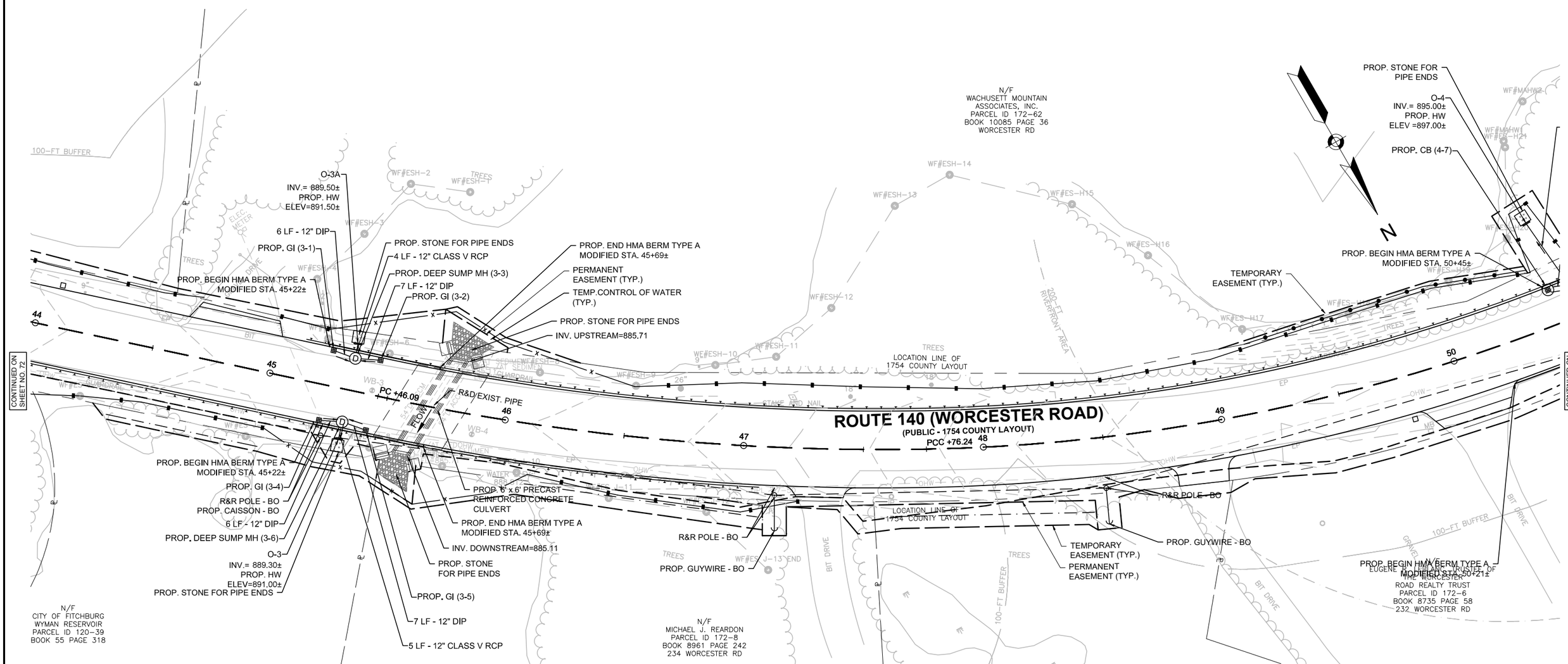

DRAINAGE STRUCTURE TABLE

NAME/TYPE	STATION	OFFSET	RIM ELEV.	INV. ELEV. IN	INV. ELEV. OUT	REMARKS
O-3	45+33.72	20.8 R	890.97	I=889.30' (PROP. DEEP SUMP MH (3-6))		
O-3A	45+33.32	19.6 L	891.22		I=889.55' (PROP. DEEP SUMP MH (3-3))	
O-4	50+49.07	43.9 L	896.67	I=894.50' (PROP. 5' DIA DMH (4-8))		
PROP. CB (4-7)	50+47.30	15.8 L	899.28		I=895.75' (PROP. 5' DIA DMH (4-8))	FLAT TOP
PROP. DEEP SUMP MH (3-3)	45+33.56	13.4 L	892.40	I=889.55' (PROP. GI (3-1)) I=889.55' (PROP. GI (3-2)) I=889.50' (O-3A)		FLAT TOP
PROP. DEEP SUMP MH (3-6)	45+33.70	13.6 R	892.40	I=889.39' (PROP. GI (3-4)) I=889.39' (PROP. GI (3-5))	I=889.35' (O-3)	FLAT TOP
PROP. GI (3-1)	45+24.04	14.8 L	892.38		I=889.88' (PROP. DEEP SUMP MH (3-3))	
PROP. GI (3-2)	45+44	14.9 L	892.36		I=889.85' (PROP. DEEP SUMP MH (3-3))	
PROP. GI (3-4)	45+24.06	14.9 R	892.38		I=889.88' (PROP. DEEP SUMP MH (3-6))	
PROP. GI (3-5)	45+44.03	14.9 R	892.36		I=889.85' (PROP. DEEP SUMP MH (3-6))	

0 20 50 100
SCALE: 1" = 40'

FOR PROFILE:
SEE SHEET NO. 33

WESTMINSTER, MA
ROUTE 140 (WORCESTER ROAD)

STATE	FED. AID PROJ. NO.	SHEET NO.	TOTAL SHEETS
MA	-	74	215
PROJECT FILE NO.	607432		

DRAINAGE AND UTILITY PLANS (9 OF 15)

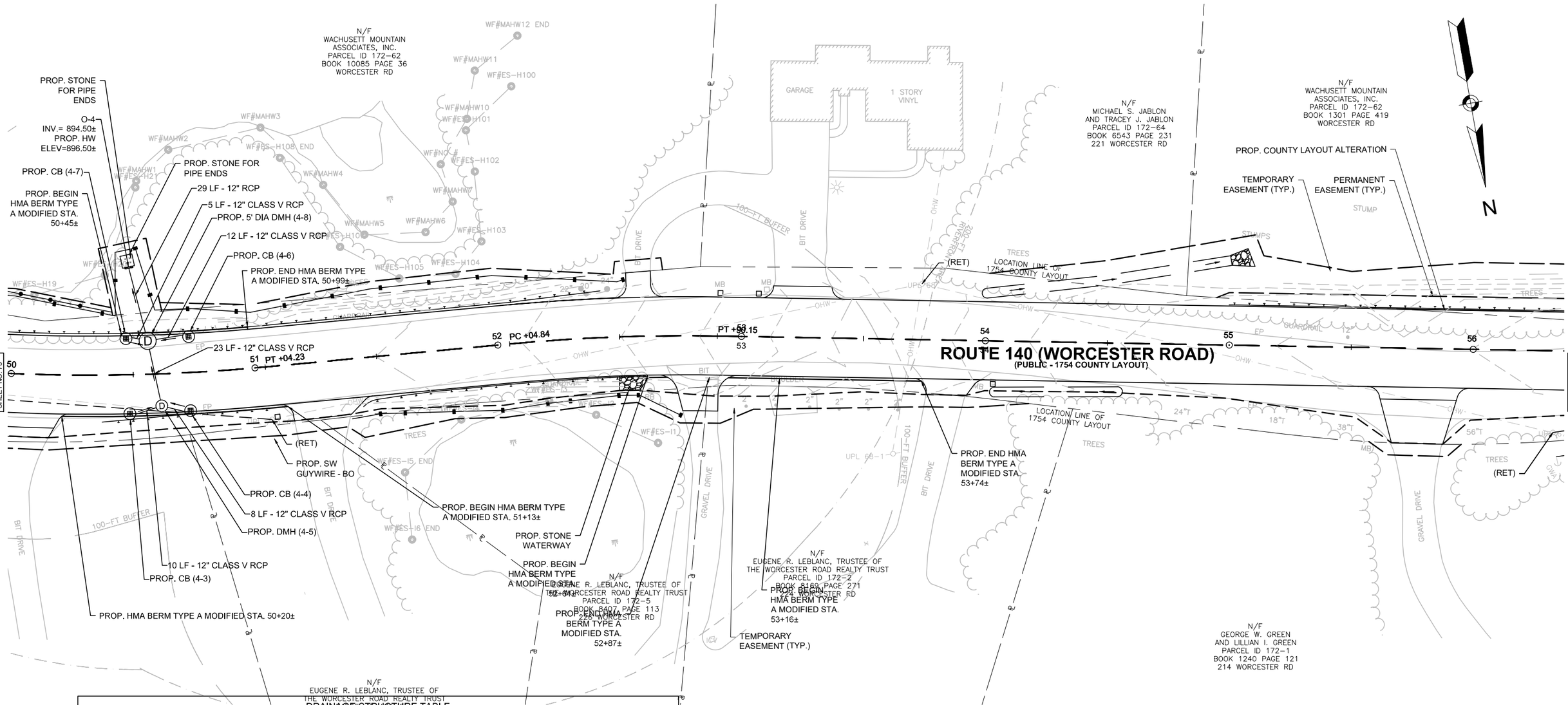

DRAINAGE STRUCTURE TABLE

NAME/TYPE	STATION	OFFSET	RIM ELEV.	INV. ELEV. IN	INV. ELEV. OUT	REMARKS
O-4	50+49.07	43.9 L	896.67	I=894.50' (PROP. 5' DIA DMH (4-8))		
PROP. 5' DIA DMH (4-8)	50+56.35	13.7 L	899.32	I=895.65' (PROP. CB (4-7)) I=894.99' (PROP. CB (4-6)) I=895.35' (PROP. DMH (4-5))	I=895.00' (O-4)	FLAT TOP
PROP. CB (4-3)	50+48.29	17.0 R	899.52		I=896.02' (PROP. DMH (4-5))	FLAT TOP
PROP. CB (4-4)	50+72.71	16.6 R	899.52		I=895.90' (PROP. DMH (4-5))	FLAT TOP
PROP. CB (4-6)	50+73.45	15.7 L	899.28		I=895.07' (PROP. 5' DIA DMH (4-8))	
PROP. CB (4-7)	50+47.30	15.8 L	899.28		I=895.75' (PROP. 5' DIA DMH (4-8))	FLAT TOP
PROP. DMH (4-5)	50+61.22	13.2 R	899.32	I=895.80' (PROP. CB (4-3)) I=895.80' (PROP. CB (4-4))	I=895.55' (PROP. 5' DIA DMH (4-8))	FLAT TOP

WQC/ACOE PLANS SHEET 30 OF 57

FOR PROFILE:
SEE SHEET NO. 34

607432_HD10(DRAINAGE AND UTILITY PLANS).DWG Plotted on 23-Aug-2022 3:07 PM

WESTMINSTER, MA
ROUTE 140 (WORCESTER ROAD)

STATE	FED. AID PROJ. NO.	SHEET NO.	TOTAL SHEETS
MA	-	75	215
PROJECT FILE NO.	607432		

DRAINAGE AND UTILITY PLANS (10 OF 15)

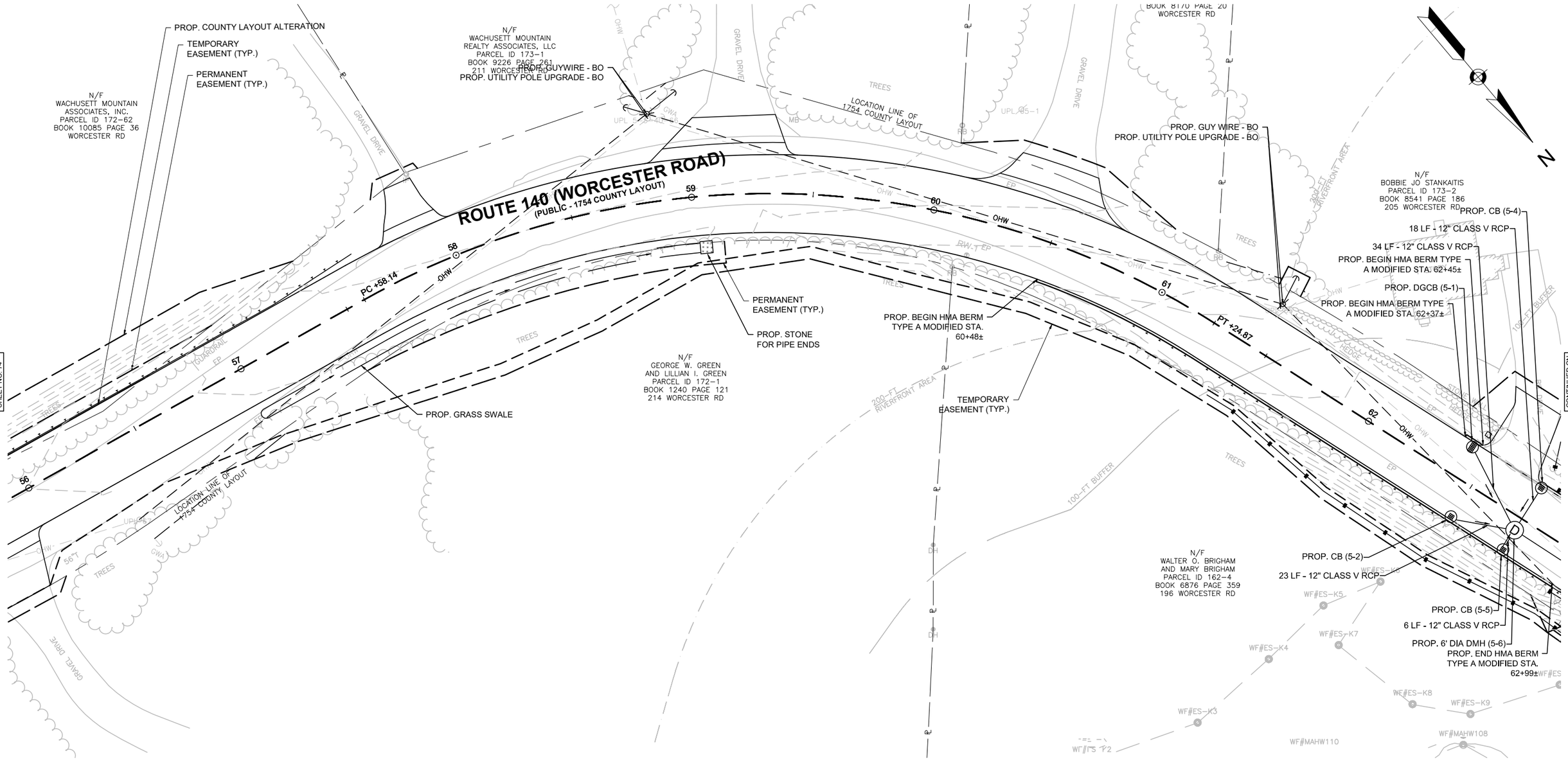

DRAINAGE STRUCTURE TABLE

NAME/TYPE	STATION	OFFSET	RIM ELEV.	INV. ELEV. IN	INV. ELEV. OUT	REMARKS
PROP. 6' DIA DMH (5-6)	62+74.69	5.5 R	908.19	I=904.30' (PROP. CB (5-4)) I=904.35' (PROP. CB (5-2)) I=904.35' (PROP. CB (5-5)) I=904.35' (PROP. DGCB (5-1))	I=904.00' (PROP. DMH (5-7))	FLAT TOP
PROP. CB (5-2)	62+49.62	15.9 R	908.12		I=904.70' (PROP. 6' DIA DMH (5-6))	FLAT TOP
PROP. CB (5-4)	62+74.63	16.0 L	908.03		I=904.45' (PROP. 6' DIA DMH (5-6))	FLAT TOP
PROP. CB (5-5)	62+74.96	15.8 R	908.16		I=904.45' (PROP. 6' DIA DMH (5-6))	FLAT TOP
PROP. DGCB (5-1)	62+41.70	14.0 L	908.09		I=904.60' (PROP. 6' DIA DMH (5-6))	FLAT TOP

WQC/ACOE PLANS SHEET 31 OF 57

FOR PROFILE:
SEE SHEET NO. 35

607432_HD10(DRAINAGE AND UTILITY PLANS).DWG Plotted on 23-Aug-2022 3:07 PM

WESTMINSTER, MA
ROUTE 140 (WORCESTER ROAD)

STATE	FED. AID PROJ. NO.	SHEET NO.	TOTAL SHEETS
MA	-	76	215
PROJECT FILE NO.	607432		

DRAINAGE AND UTILITY PLANS (11 OF 15)

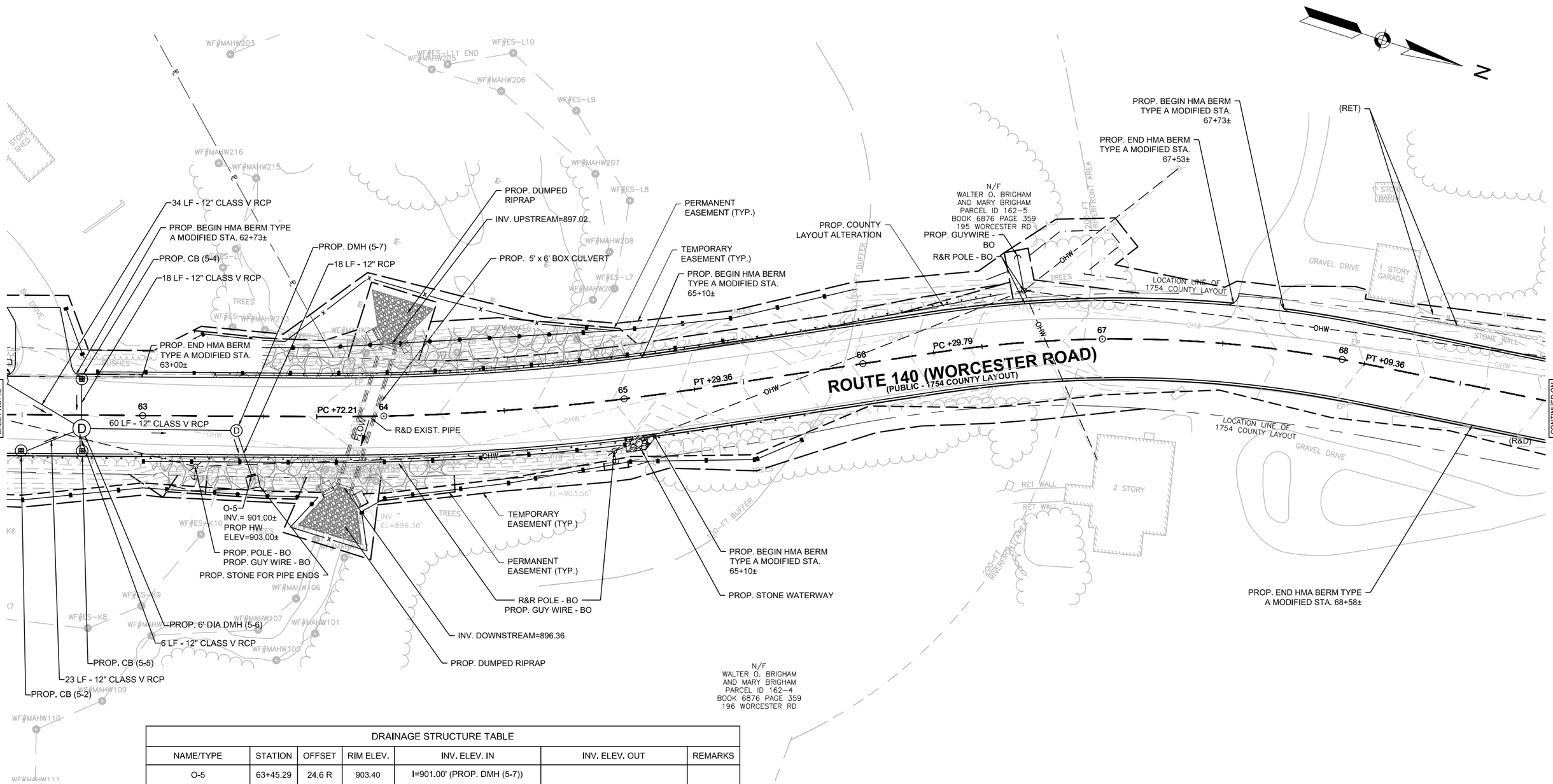

DRAINAGE STRUCTURE TABLE						
NAME/TYPE	STATION	OFFSET	RIM ELEV.	INV. ELEV. IN	INV. ELEV. OUT	REMARKS
O-5	63+45.29	24.6 R	903.40	I=901.00' (PROP. DMH (5-7))		
PROP. 6' DIA DMH (5-6)	62+74.69	5.5 R	908.19	I=904.30' (PROP. CB (5-4)) I=904.35' (PROP. CB (5-2)) I=904.35' (PROP. CB (5-5)) I=904.35' (PROP. DGCB (5-1))	I=904.00' (PROP. DMH (5-7))	FLAT TOP
PROP. CB (5-2)	62+49.62	15.9 R	908.12		I=904.70' (PROP. 6' DIA DMH (5-6))	FLAT TOP
PROP. CB (5-4)	62+74.63	16.0 L	908.03		I=904.45' (PROP. 6' DIA DMH (5-6))	FLAT TOP
PROP. CB (5-5)	62+74.96	15.8 R	908.16		I=904.45' (PROP. 6' DIA DMH (5-6))	FLAT TOP
PROP. DMH (5-7)	63+38.91	6.0 R	908.48	I=902.00' (PROP. 6' DIA DMH (5-6))	I=901.50' (O-5)	

0 20 50 100
SCALE: 1" = 40'

FOR PROFILE:
SEE SHEET NO. 36

WESTMINSTER, MA
ROUTE 140 (WORCESTER ROAD)

STATE	FED. AID PROJ. NO.	SHEET NO.	TOTAL SHEETS
MA	-	77	215
PROJECT FILE NO.	607432		

DRAINAGE AND UTILITY PLANS (12 OF 15)

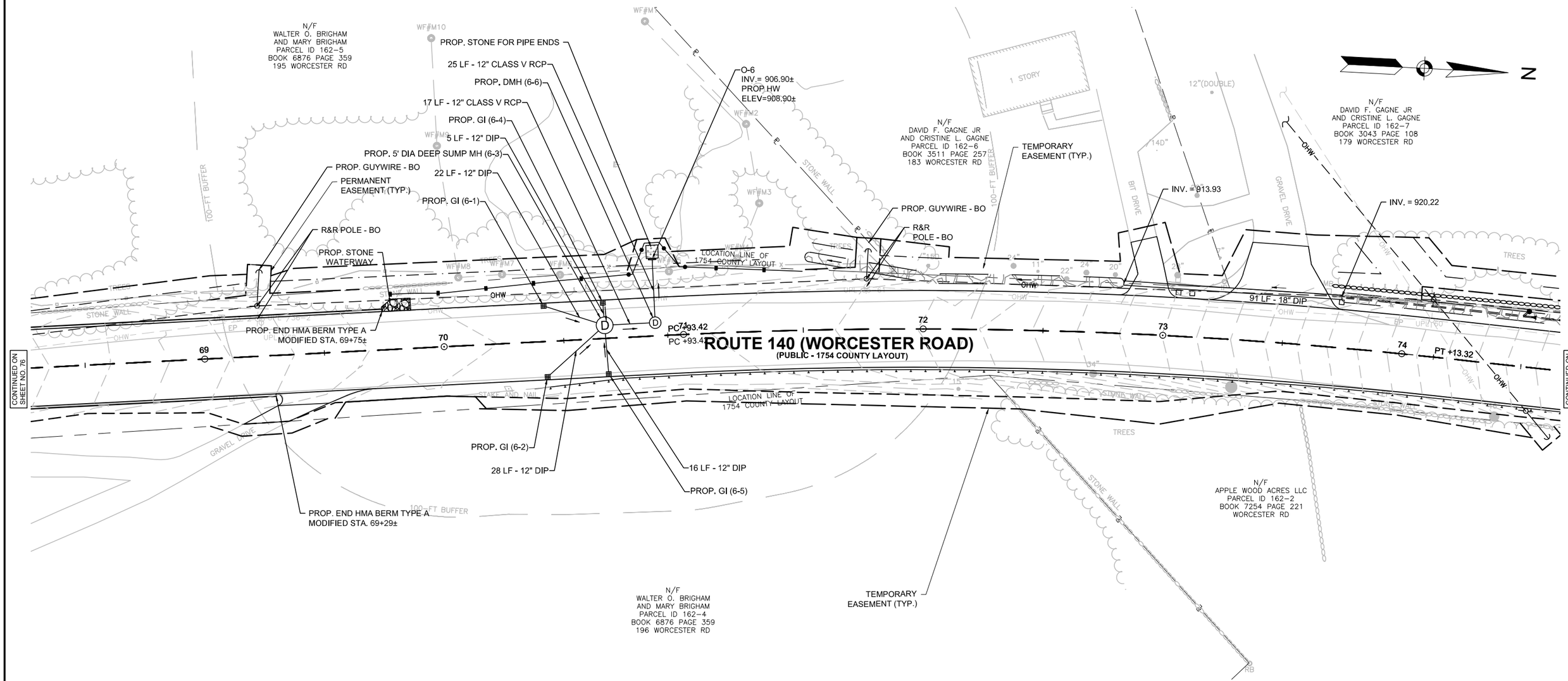

DRAINAGE STRUCTURE TABLE						
NAME/TYPE	STATION	OFFSET	RIM ELEV.	INV. ELEV. IN	INV. ELEV. OUT	REMARKS
O-6	70+88.57	32.1 L	908.73	I=906.90' (PROP. DMH (6-6))		
PROP. 5' DIA DEEP SUMP MH (6-3)	70+67.34	5.5 L	910.62	I=907.25' (PROP. GI (6-5)) I=907.25' (PROP. GI (6-4)) I=907.25' (PROP. GI (6-1)) I=907.25' (PROP. GI (6-2))	I=907.25' (PROP. DMH (6-6))	FLAT TOP
PROP. DMH (6-6)	70+88.46	5.5 L	910.65	I=907.14' (PROP. 5' DIA DEEP SUMP MH (6-3))	I=907.14' (O-6)	FLAT TOP
PROP. GI (6-1)	70+42.31	14.9 L	910.46		I=907.96' (PROP. 5' DIA DEEP SUMP MH (6-3))	
PROP. GI (6-2)	70+42.48	14.8 R	910.46		I=907.96' (PROP. 5' DIA DEEP SUMP MH (6-3))	
PROP. GI (6-4)	70+67.04	14.9 L	910.44		I=907.94' (PROP. 5' DIA DEEP SUMP MH (6-3))	
PROP. GI (6-5)	70+68.02	15.0 R	910.44		I=907.94' (PROP. 5' DIA DEEP SUMP MH (6-3))	

0 20 50 100
SCALE: 1" = 40'

FOR PROFILE:
SEE SHEET NO. 37

WESTMINSTER, MA
ROUTE 140 (WORCESTER ROAD)

STATE	FED. AID PROJ. NO.	SHEET NO.	TOTAL SHEETS
MA	-	78	215
PROJECT FILE NO.	607432		

DRAINAGE AND UTILITY PLANS (13 OF 15)

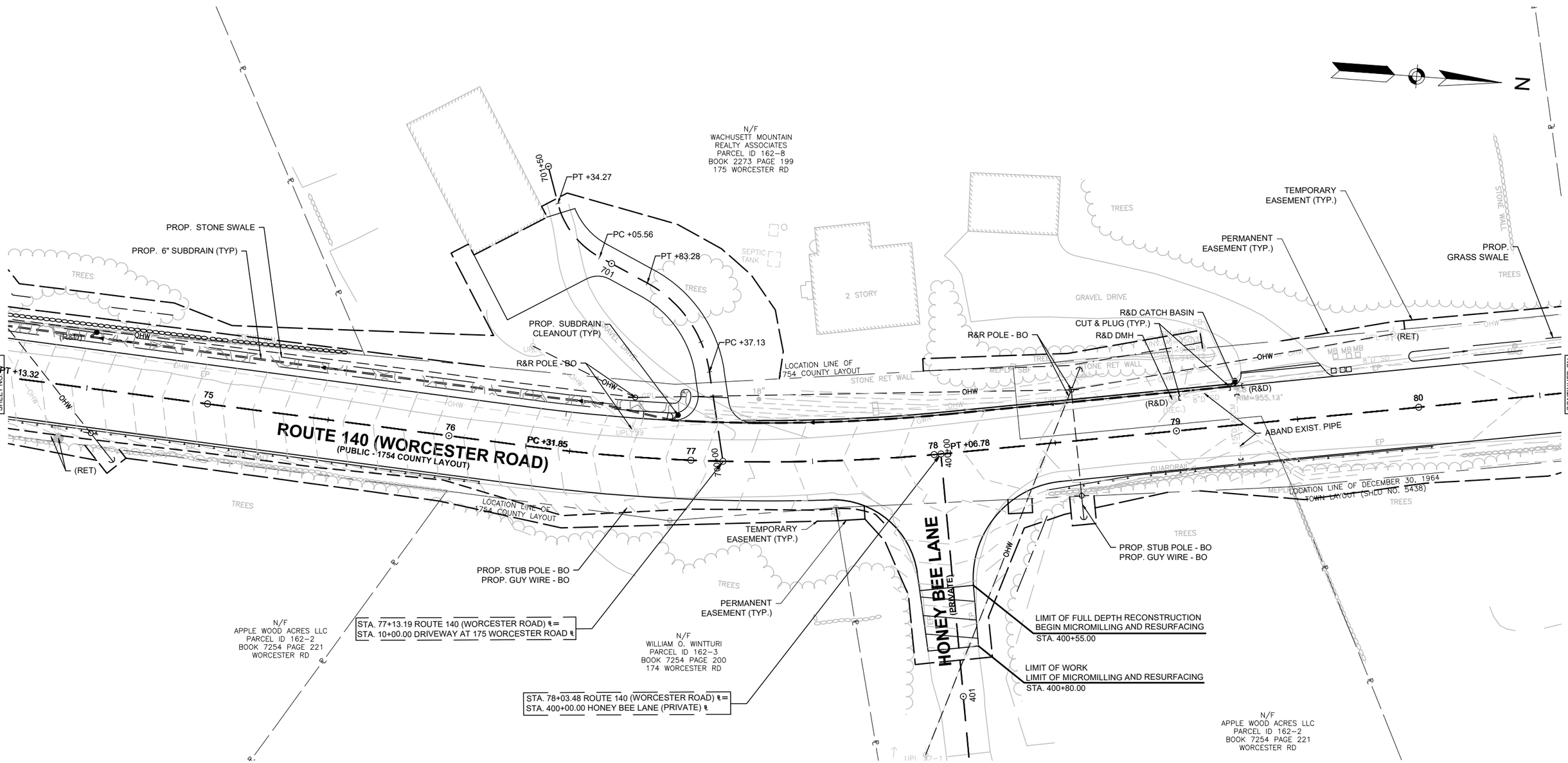

0 20 50 100
SCALE: 1" = 40'

WQC/ACOE PLANS SHEET 34 OF 57

FOR PROFILE:
SEE SHEET NO. 38

607432_HD10(DRAINAGE AND UTILITY PLANS).DWG Plotted on: 23-Aug-2022 3:07 PM

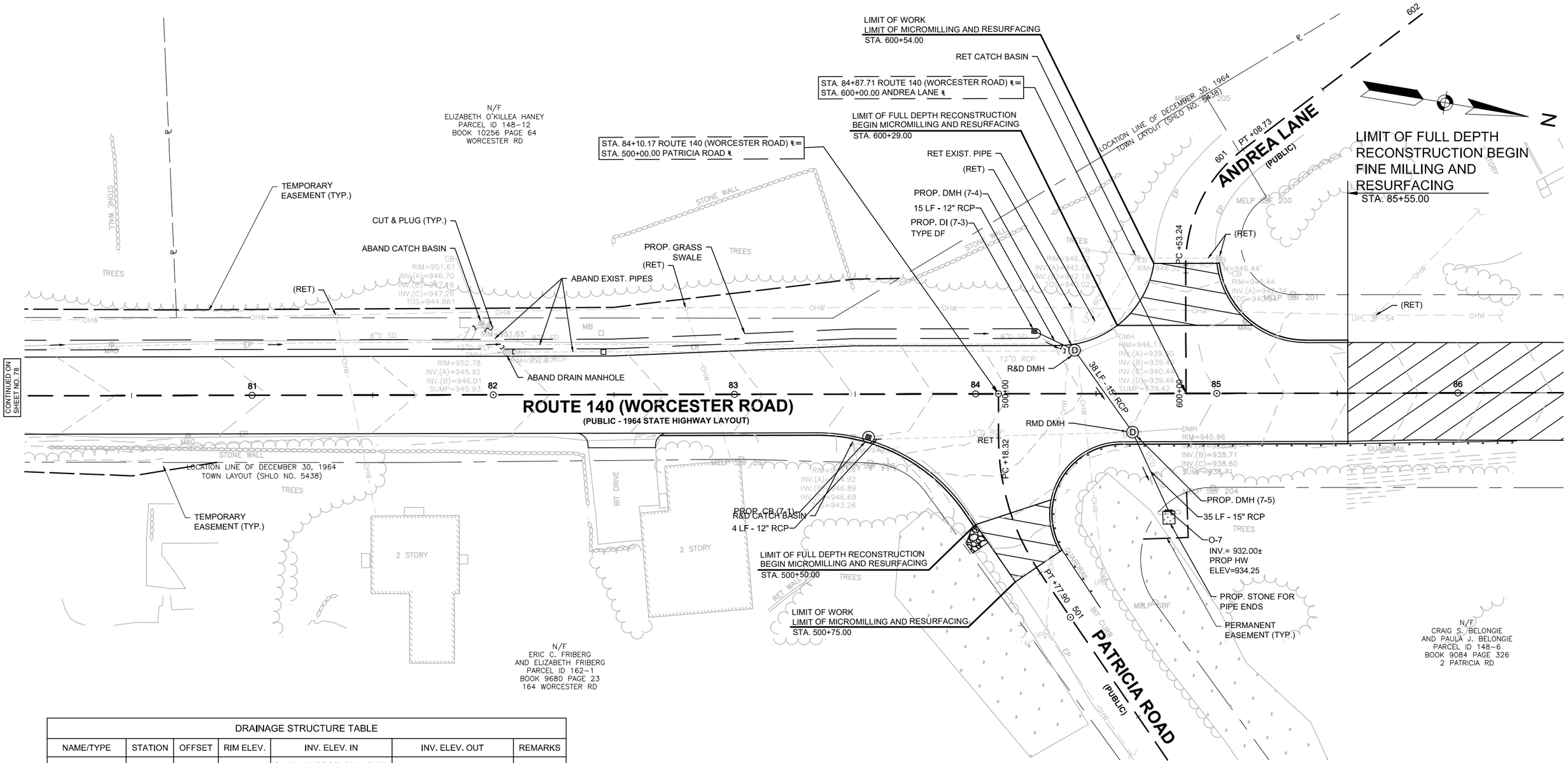

DRAINAGE STRUCTURE TABLE						
NAME/TYPE	STATION	OFFSET	RIM ELEV.	INV. ELEV. IN	INV. ELEV. OUT	REMARKS
O-7	84+79.95	48.6 R	934.54	I=932.00' (PROP. DMH (7-5))		
PROP. CB (7-1)	83+55.20	18.8 R	949.20		I=944.50' ()	
PROP. DI (7-3)	84+24.40	26.0 L	946.36		I=942.86' (PROP. DMH (7-4))	
PROP. DMH (7-4)	84+41.12	18.0 L	946.89	I=942.56' (PROP. DI (7-3))	I=939.00' (PROP. DMH (7-5))	
PROP. DMH (7-5)	84+65.06	16.0 R	945.95	I=938.60' (PROP. DMH (7-4))	I=938.45' (O-7)	

0 20 50 100
SCALE: 1" = 40'

FOR PROFILE:
SEE SHEET NO. 39

WESTMINSTER, MA
ROUTE 140 (WORCESTER ROAD)

STATE	FED. AID PROJ. NO.	SHEET NO.	TOTAL SHEETS
MA	-	80	215
PROJECT FILE NO.	607432		

DRAINAGE AND UTILITY PLANS (15 OF 15)

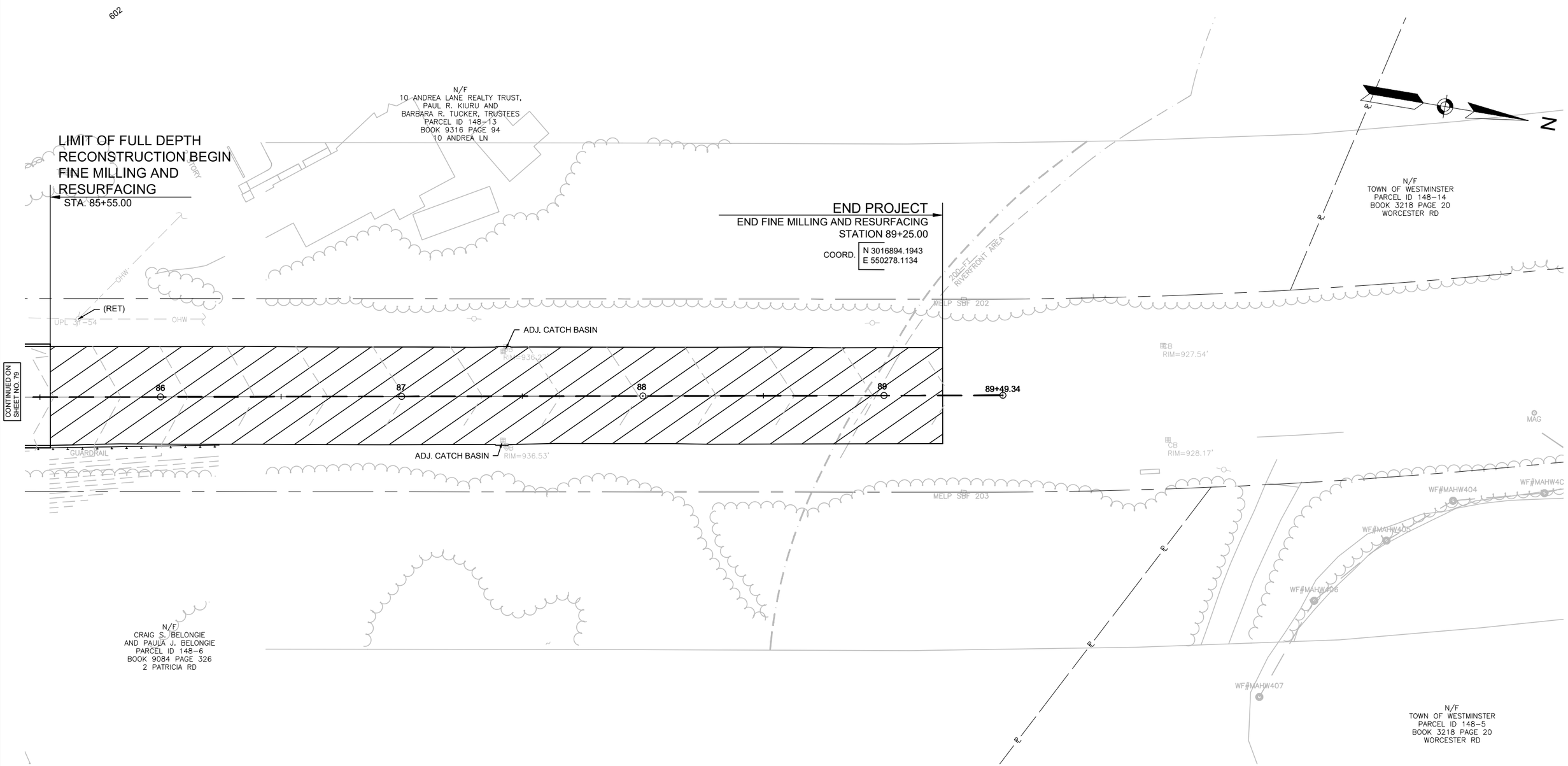

0 20 50 100
SCALE: 1" = 40'

FOR PROFILE:
SEE SHEET NO. 40

WQC/ACOE PLANS SHEET 36 OF 57

607432_HD10(DRAINAGE AND UTILITY PLANS).DWG Plotted on 23-Aug-2022 3:07 PM

WESTMINSTER, MA
ROUTE 140 (WORCESTER ROAD)

STATE	FED. AID PROJ. NO.	SHEET NO.	TOTAL SHEETS
MA	-	104	215
PROJECT FILE NO.	607432		

WETLAND REPLICATION AREA

LEGEND

- LIMIT OF WORK
- SEDIMENT CONTROL BARRIER
- PROPOSED LIMIT OF EXISTING VEGETATION
- 595 — PROPOSED CONTOUR
- 595 — EXISTING CONTOUR
- 124.694 — PROPOSED SPOT GRADE
- COMPOST BLANKET AND WOODLAND EDGE SHADE SEED MIX
- WETLAND SOIL AND WETLAND SEED MIX
- PROPOSED SHRUB
- PROPOSED TREE
- EXISTING TREE ARMORING
- TIMBER MAT AND PROTECTION FABRIC

953 SF AREA OF SHADE TOLERANT SEED MIX
1,500 SF AREA OF WETLAND SEED MIX
119 LF LENGTH OF SEDIMENT CONTROL BARRIER

NOTES:

1. IMPACTS TO EXISTING TREES AND SOILS SHALL BE MINIMIZED TO THE EXTENT POSSIBLE.
2. NO VEHICULAR ACCESS TO THE SITE, CLEARING OR EARTHWORK SHALL OCCUR PRIOR TO THE SITE MEETING DESCRIBED IN NOTE 4.
3. THE CONTRACTOR SHALL STAKE THE LIMITS OF THE WETLAND REPLICATION AREA AS SHOWN ON THIS PLAN PRIOR TO ANY CLEARING AND GRUBBING AND PRIOR TO THE MEETING DESCRIBED IN NOTE 4.
4. THE RESIDENT ENGINEER, REPRESENTATIVE FROM MASS DOT LANDSCAPE DESIGN SECTION, THE CONTRACTOR AND THE WETLAND SPECIALIST SHALL MEET ON SITE TO REVIEW THE STAKED WETLAND REPLICATION LOCATION, REVIEW EQUIPMENT TO BE USED, METHOD OF ACCESS, IDENTIFY TREES TO BE RETAINED, IDENTIFY TREES TO BE CUT AND REUSED ON SITE AND TO REVIEW LIMIT OF WORK, ACCESS ROUTE, AND LOCATION OF SEDIMENT CONTROL BARRIER.
5. THE CONTRACTOR SHALL ARRANGE TO HAVE THE REPRESENTATIVE FROM MASS DOT LANDSCAPE DESIGN SECTION ON SITE DURING CONSTRUCTION IF REQUESTED BY THE REPRESENTATIVE.
6. THE REPRESENTATIVE FROM MASS DOT LANDSCAPE DESIGN SECTION FOR THIS PROJECT IS TARA MITCHELL Tara.Mitchell@dot.state.ma.us

PLANTING & SEEDING NOTES:

1. PLANTING PLAN IS SCHEMATIC ONLY. PLANTS SHALL BE LOCATED IN THE FIELD BY THE MASSDOT LANDSCAPE DESIGN REPRESENTATIVE IN COORDINATION WITH THE WETLAND SPECIALIST AS APPROPRIATE TO AS-BUILT CONDITIONS AND HYDROLOGY.
2. SEED SHALL BE MANUALLY BROADCAST. LIMITS SHOWN ARE APPROXIMATE. ACTUAL LIMITS SHALL BE AS DIRECTED BY THE WETLAND SPECIALIST AND MASSDOT LANDSCAPE DESIGN REPRESENTATIVE.

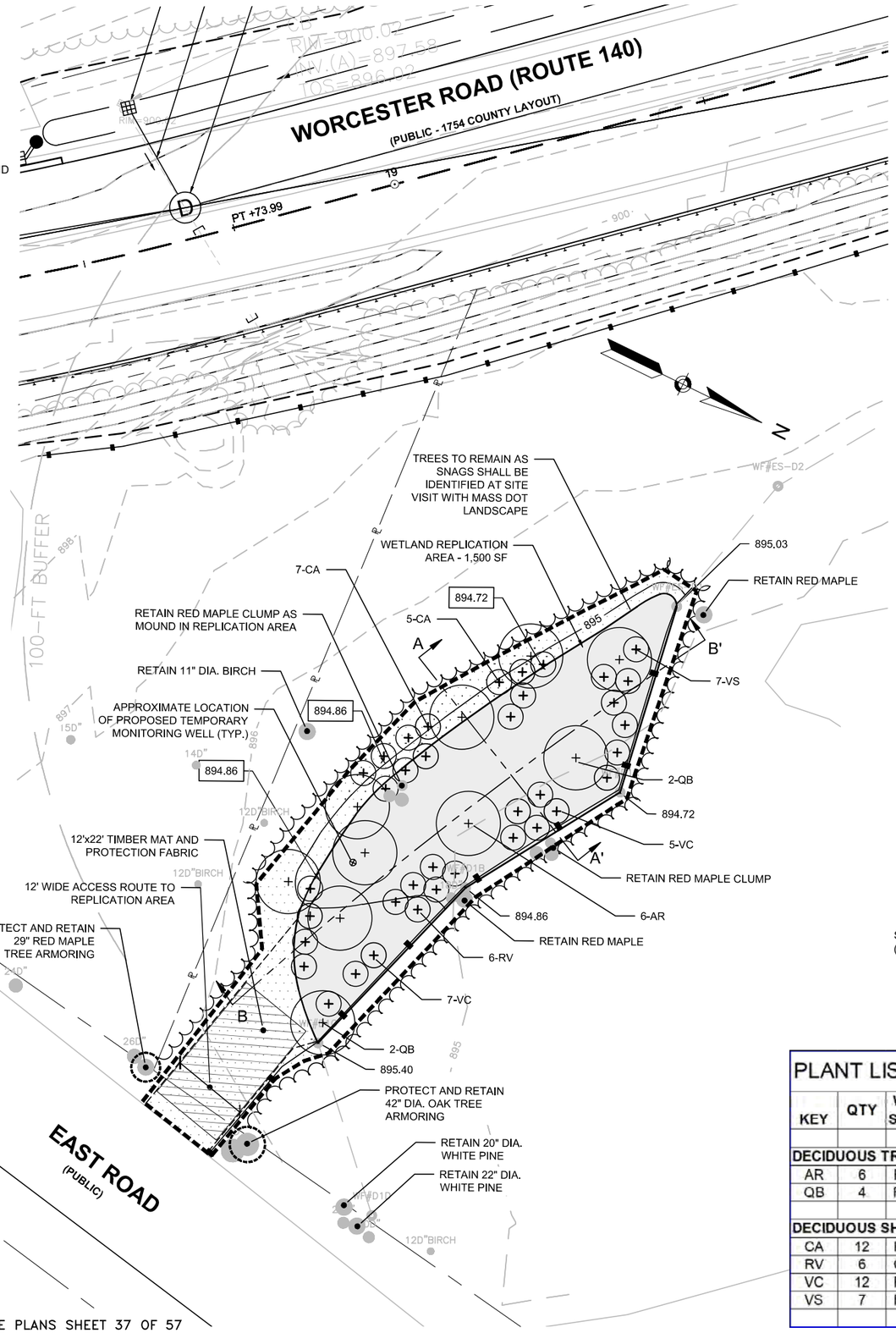

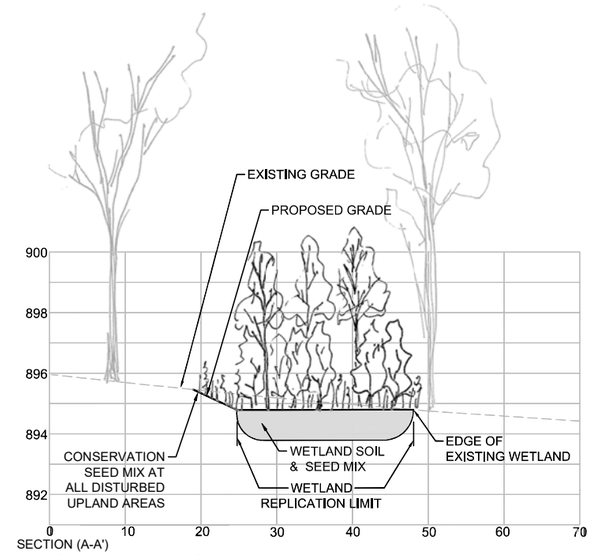

SECTION (A-A')
(HOR. SCALE 1" = 20' , VERT. SCALE 1" = 5')

NOTE: EXCAVATE AND INSTALL WETLAND SOIL TO THE DEPTH OF EXISTING HYDRIC SOIL OR AS REQUIRED TO MEET SPECIFICATIONS.

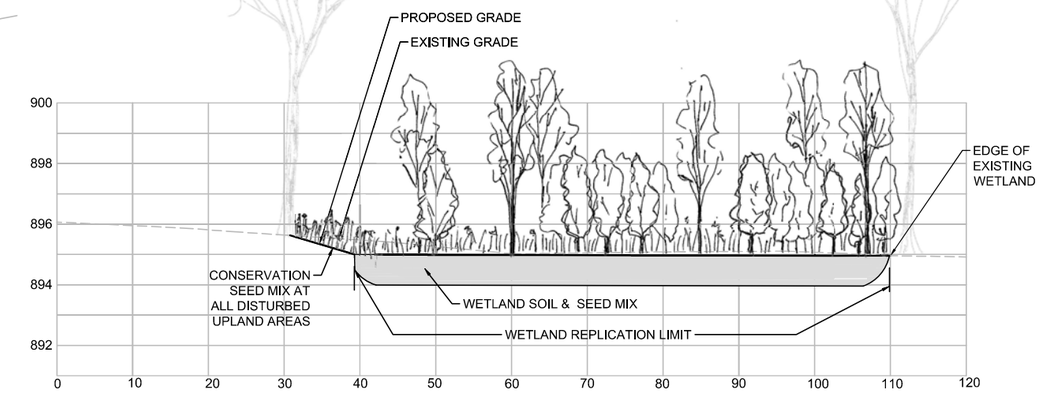

SECTION (B-B')
(HOR. SCALE 1" = 20' , VERT. SCALE 1" = 5')

PLANT LIST - WETLAND REPLICATION

KEY	QTY	WETLAND STATUS	BOTANICAL NAME	COMMON NAME	PLANT SIZE	SPACING/NOTES
DECIDUOUS TREES						
AR	6	FAC	ACER RUBRUM	RED MAPLE	4-6' HT	SEE SPECIFICATION
QB	4	FACW	QUERCUS BICOLOR	SWAMP WHITE OAK	4-6' HT	SEE SPECIFICATION
DECIDUOUS SHRUBS						
CA	12	FAC+	CLETHRA ALNIFOLIA	SWEET PEPPERBUSH	2-2.5' HT	SEE SPECIFICATION
RV	6	OBL	RHODODENDRON VISCOSUM	SWAMP AZALEA	2-2.5' HT	SEE SPECIFICATION
VC	12	FACW	VACCINIUM CORYMBOSUM	HIGHBUSH BLUEBERRY	2-2.5' HT	SEE SPECIFICATION
VS	7	FACW	VIBURNUM RECOGNITUM	SMOOTH ARROWWOOD	2-2.5' HT	SEE SPECIFICATION

10 0 10 20
SCALE IN FEET

WESTMINSTER, MA
ROUTE 140 (WORCESTER ROAD)

STATE	FED. AID PROJ. NO.	SHEET NO.	TOTAL SHEETS
MA	-	105	215
PROJECT FILE NO.	607432		

COMPENSATORY FLOOD STORAGE

LEGEND

- LIMIT OF WORK
- SEDIMENT CONTROL BARRIER
- COIR FIBER ROLL
- PROPOSED LIMIT OF EXISTING VEGETATION
- 100 PROPOSED CONTOUR
- 100 EXISTING CONTOUR
- COMPOST BLANKET AND MID-HEIGHT GRASSLAND SEED MIX
- COMPOST BLANKET AND RIPARIAN SEED MIX
- COMPENSATORY FLOOD STORAGE
- PROPOSED SHRUB
- PROPOSED TREE
- PROPOSED EVERGREEN TREE

344 LN FT LENGTH OF SEDIMENT CONTROL BARRIER

111 LN FT LENGTH OF COIR LOG

4409 SQ FT AREA OF NATIVE UPLAND SEED MIX

4213 SQ FT AREA OF WETLAND SEED MIX

NOTES:

1. PRIOR TO ANY CLEARING AND GRUBBING, THE CONTRACTOR SHALL STAKE THE LIMITS OF THE FLOOD COMPENSATION AREA AS SHOWN ON THIS PLAN.
2. NO VEHICULAR ACCESS TO THE SITE, CLEARING OR EARTHWORK SHALL OCCUR PRIOR TO THE SITE MEETING DESCRIBED IN NOTE 3.
3. THE RESIDENT ENGINEER, REPRESENTATIVE FROM MASSDOT LANDSCAPE DESIGN SECTION, THE CONTRACTOR AND THE WETLAND SPECIALIST SHALL MEET ON SITE TO REVIEW THE STAKED COMPENSATION AREA, IDENTIFY TREES TO BE RETAINED, TREES TO BE REMOVED AND REUSED ON SITE AND TO REVIEW LIMIT OF WORK AND THE ACCESS ROUTE, METHODS OF TREE REMOVAL, AND LOCATION OF SEDIMENT BARRIERS FOR CONSTRUCTION AND POST CONSTRUCTION.
4. THE CONTRACTOR SHALL ARRANGE TO HAVE THE REPRESENTATIVE FROM MASSDOT LANDSCAPE DESIGN SECTION ON SITE DURING CONSTRUCTION IF REQUESTED BY THE REPRESENTATIVE.
5. THE REPRESENTATIVE FROM MASSDOT LANDSCAPE DESIGN SECTION FOR THIS PROJECT IS TARA MITCHELL TARA.MITCHELL@DOT.STATE.MA.US

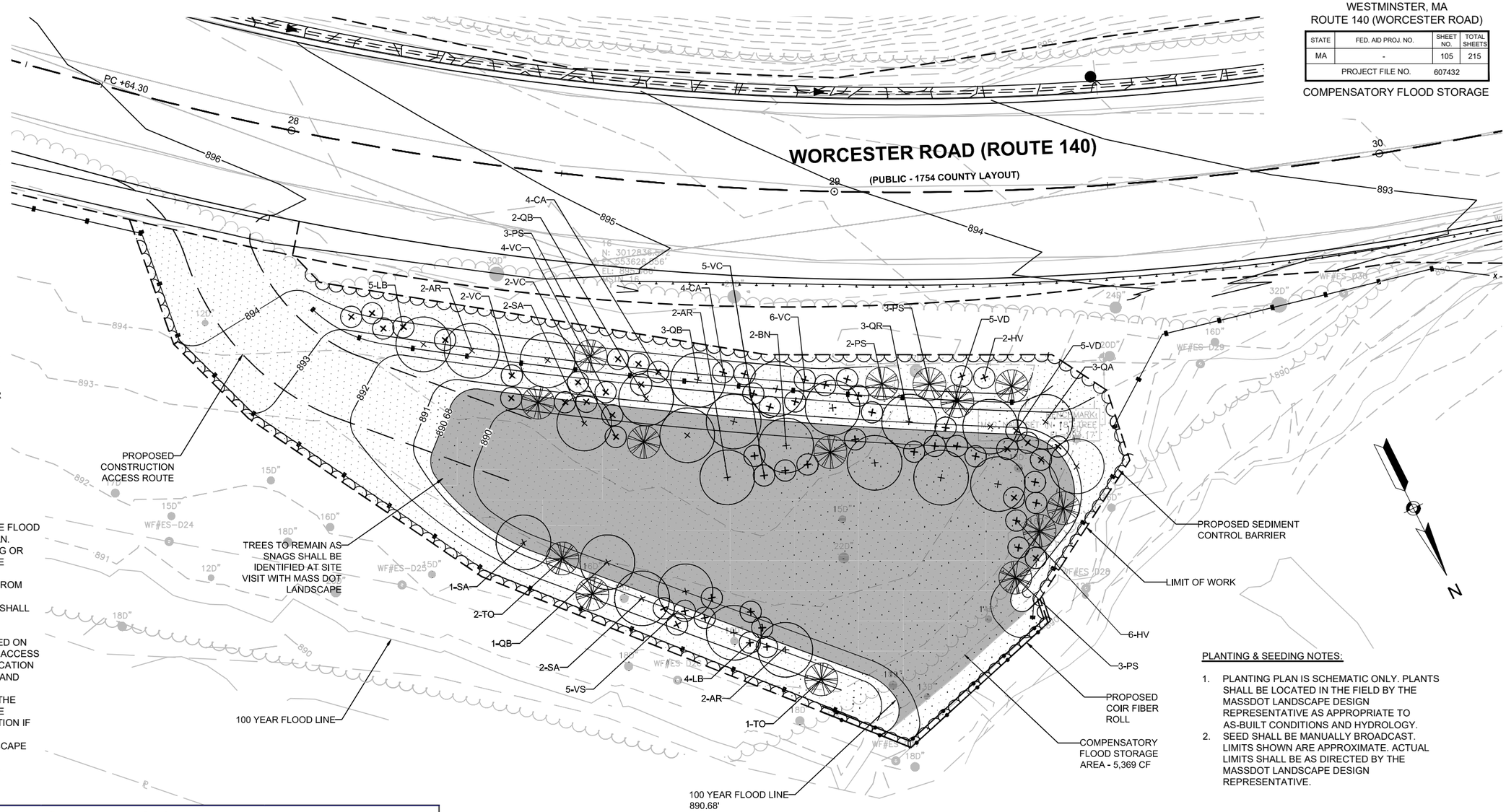

PLANTING & SEEDING NOTES:

1. PLANTING PLAN IS SCHEMATIC ONLY. PLANTS SHALL BE LOCATED IN THE FIELD BY THE MASSDOT LANDSCAPE DESIGN REPRESENTATIVE AS APPROPRIATE TO AS-BUILT CONDITIONS AND HYDROLOGY.
2. SEED SHALL BE MANUALLY BROADCAST. LIMITS SHOWN ARE APPROXIMATE. ACTUAL LIMITS SHALL BE AS DIRECTED BY THE MASSDOT LANDSCAPE DESIGN REPRESENTATIVE.

PLANT LIST - COMPENSATORY STORAGE AREA RESTORATION

KEY	QTY	WETLAND STATUS	BOTANICAL NAME	COMMON NAME	PLANT SIZE	SPACING/NOTES
DECIDUOUS TREES						
AR	6	FAC	ACER RUBRUM	RED MAPLE	4-6' HT	SEE SPECIFICATION
BN	2	FACW	BETULA NIGRA	RIVER BIRCH	4-6' HT	SEE SPECIFICATION
QA	3	FACU-	QUERCUS ALBA	WHITE OAK	4-6' HT	SEE SPECIFICATION
QB	6	FACW	QUERCUS BICOLOR	SWAMP WHITE OAK	4-6' HT	SEE SPECIFICATION
QR	3	FACU-	QUERCUS RUBRA	NORTHERN RED OAK	4-6' HT	SEE SPECIFICATION
SA	5	FACU-	SASSAFRAS ALBIDUM	SASSAFRAS	4-6' HT	SEE SPECIFICATION
EVERGREEN TREES						
PS	11	FACU	PINUS STROBUS	WHITE PINE	3-4' HT	SEE SPECIFICATION
TO	3	FACW	THUJA OCCIDENTALIS	NORTHERN WHITE CEDAR	3-4' HT	SEE SPECIFICATION
DECIDUOUS SHRUBS						
CA	8	FAC+	CLETHRA ALNIFOLIA	SWEET PEPPERBUSH	2-2.5' HT	SEE SPECIFICATION
HV	8	FAC-	HAMAMELIS VIRGINIANA	WITCH HAZEL	2-2.5' HT	SEE SPECIFICATION
LB	9	FACW	LINDERA BENZOIN	SPICE BUSH	2-2.5' HT	SEE SPECIFICATION
VC	19	FACW	VACCINIUM CORYMBOSUM	HIGHBUSH BLUEBERRY	2-2.5' HT	SEE SPECIFICATION
VD	10	FAC	VIBURNUM DENTATUM	ARROWWOOD VIBURNUM	2-2.5' HT	SEE SPECIFICATION
VS	5	FACW	VIBURNUM RECOGNITUM	SMOOTH ARROWWOOD	2-2.5' HT	SEE SPECIFICATION

Elevation	Elevation	Proposed Cut Volume Volume (CF)	Total Proposed Fill Volume Volume (CF)	Incremental Net Cut/Fill Volume (CF)
885-886	885	0	0	0
	886			
886-887	886	0	0	0
	887			
887-888	887	0	87	87
	888			
888-889	888	0	438	438
	889			
889-890	889	1670	933	-737
	890			
890-890.68	890	3698	3472	-226
	890.68			
	Total	**5369**	**4931**	**-438**

10 0 10 20
SCALE IN FEET

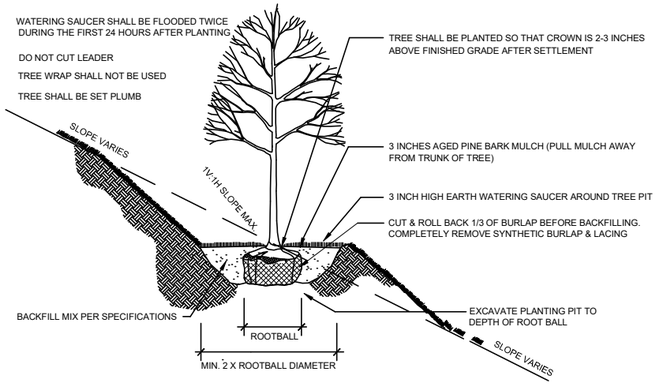

1 DECIDUOUS TREE PLANTING (SLOPE)
NOT TO SCALE

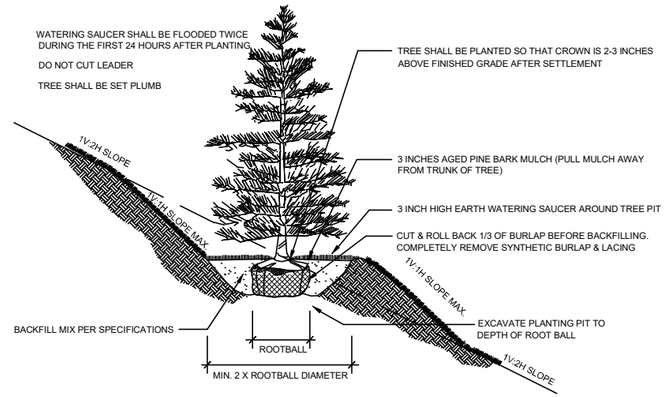

2 EVERGREEN TREE PLANTING (SLOPE)
NOT TO SCALE

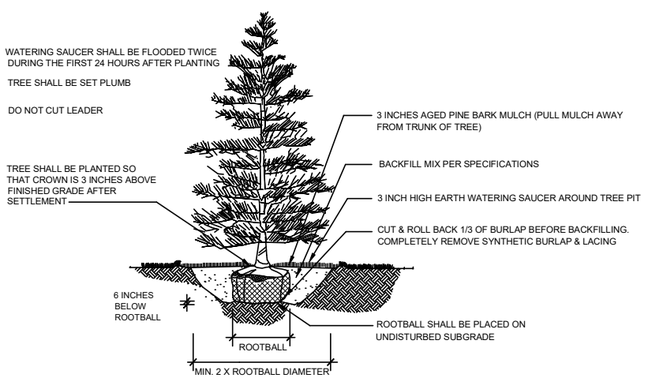

3 EVERGREEN TREE PLANTING
NOT TO SCALE

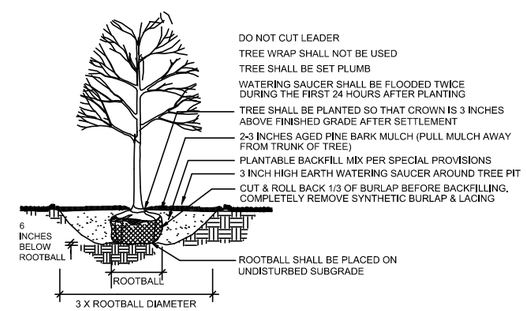

4 TREE PLANTING
NOT TO SCALE

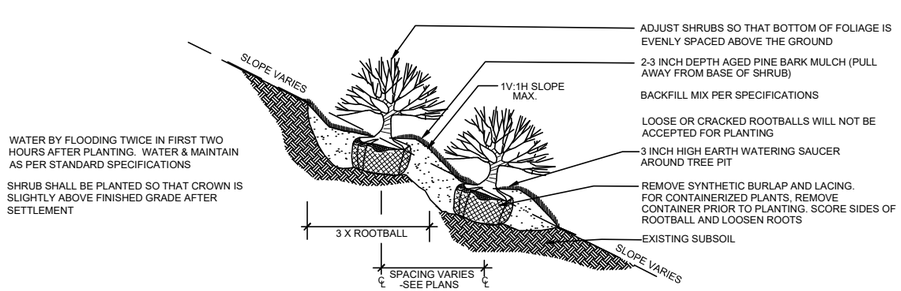

5 CONTAINERIZED SHRUB PLANTING (SLOPE) DETAIL
NOT TO SCALE

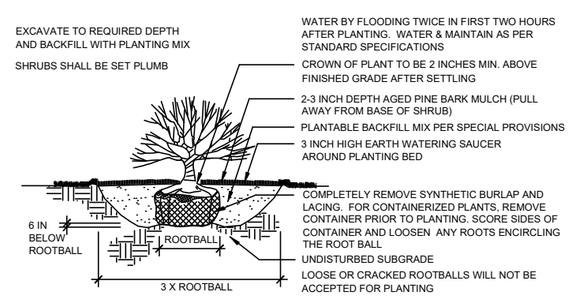

6 SHRUB PLANTING
NOT TO SCALE

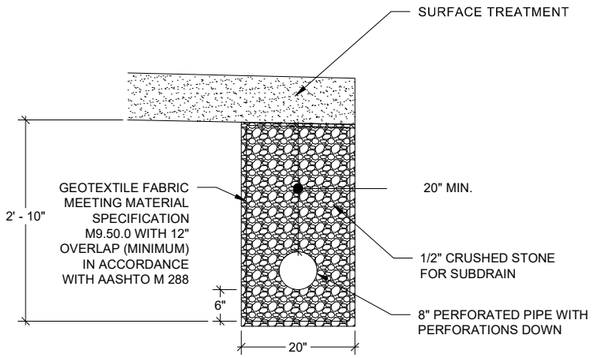

NOTES:

1. SEE CROSS SECTIONS FOR PROPOSED PIPE INVERTS.

TYPICAL SUBDRAIN

NOT TO SCALE

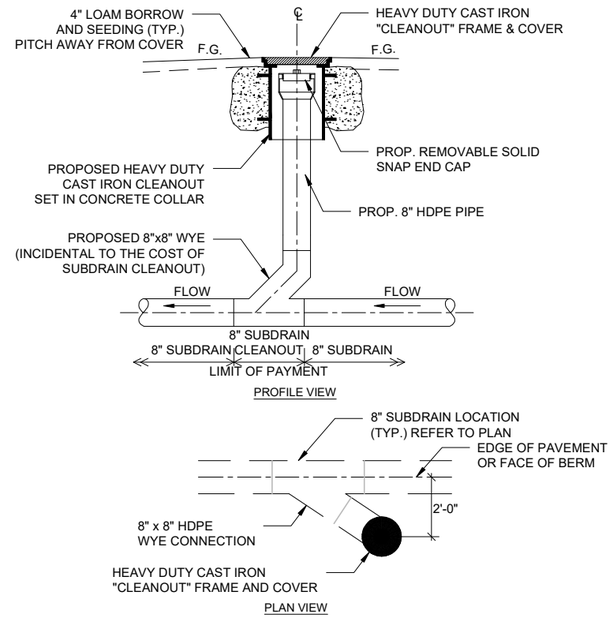

TYPICAL 8" SUBDRAIN CLEANOUT AT SUBDRAIN MIDPOINT DETAIL

NOT TO SCALE

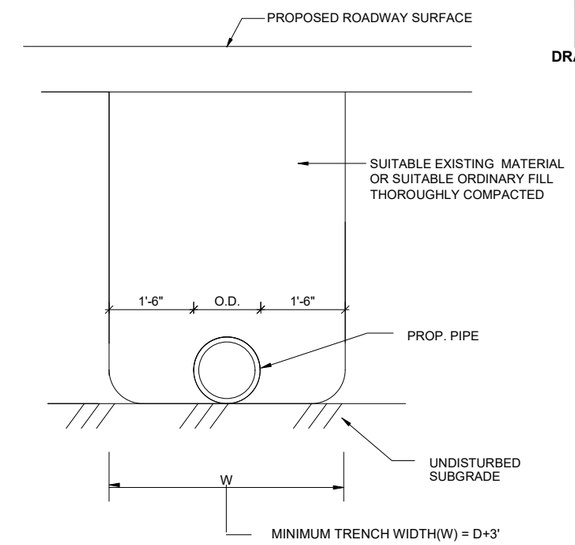

TYPICAL DRAIN TRENCH DETAIL

NOT TO SCALE

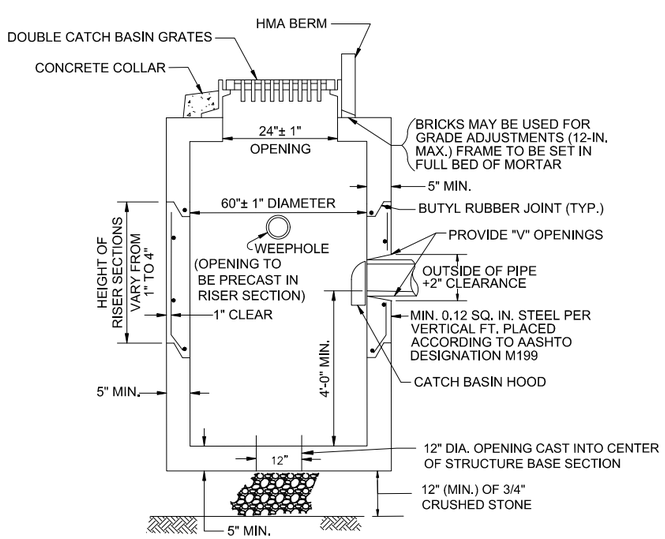

DOUBLE GRATE CATCH BASIN

NOT TO SCALE

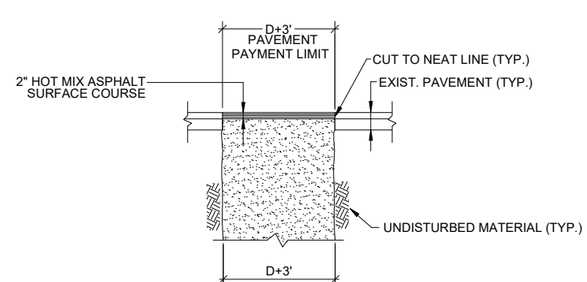

TRENCH WIDTH
SUITABLE BACKFILL MATERIAL
D = INSIDE PIPE DIAMETER
HMA PAVEMENT SHALL BE PAID FOR UNDER ITEM 472.

TEMPORARY TRENCH PATCH

NOT TO SCALE

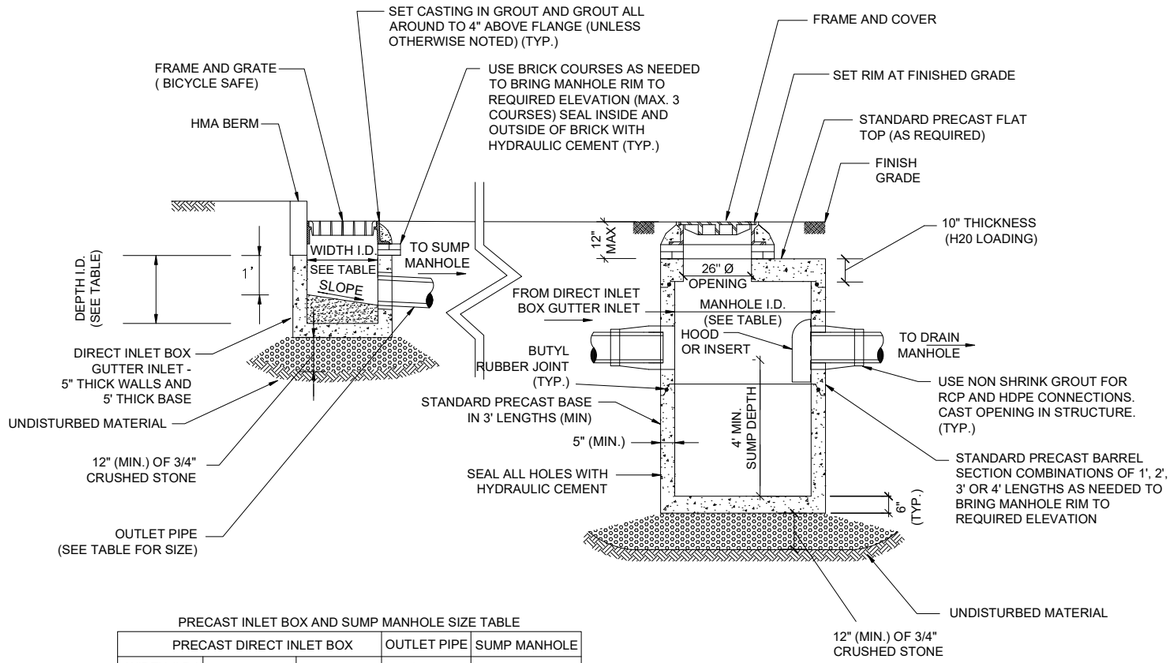

PRECAST INLET BOX AND SUMP MANHOLE SIZE TABLE

	PRECAST DIRECT INLET BOX			OUTLET PIPE	SUMP MANHOLE
	WIDTH (I.D.)	LENGTH (I.D.)	DEPTH (I.D.)	Ø (I.D.)	Ø (I.D.)*
SINGLE GRATE	24"	24"	24"	12"	4'
DOUBLE GRATE	24"	48"	36"	15"	4'

I.D. = INSIDE DIMENSION

SINGLE/DOUBLE GRATE GUTTER INLET AND DEEP SUMP MANHOLE

* UNLESS NOTED ON THE PLANS

NOT TO SCALE

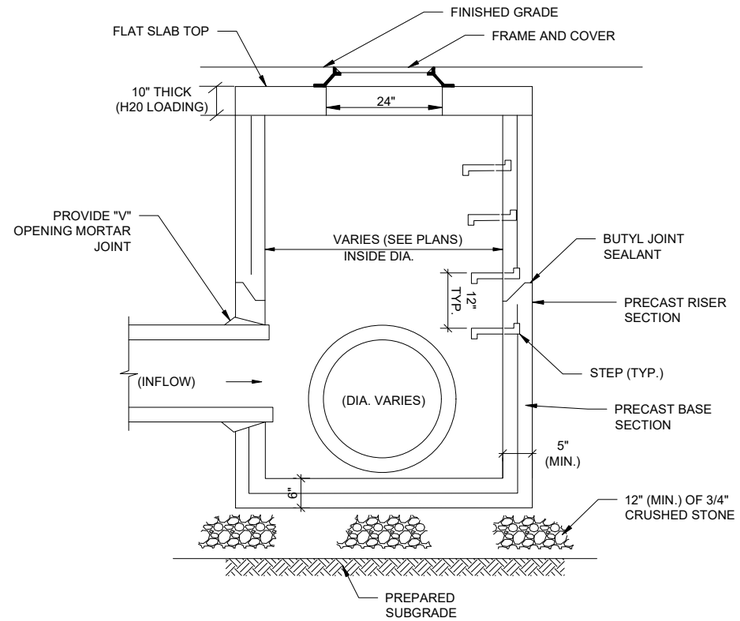

FLAT TOP SLAB DRAIN MANHOLE DETAIL

NOT TO SCALE

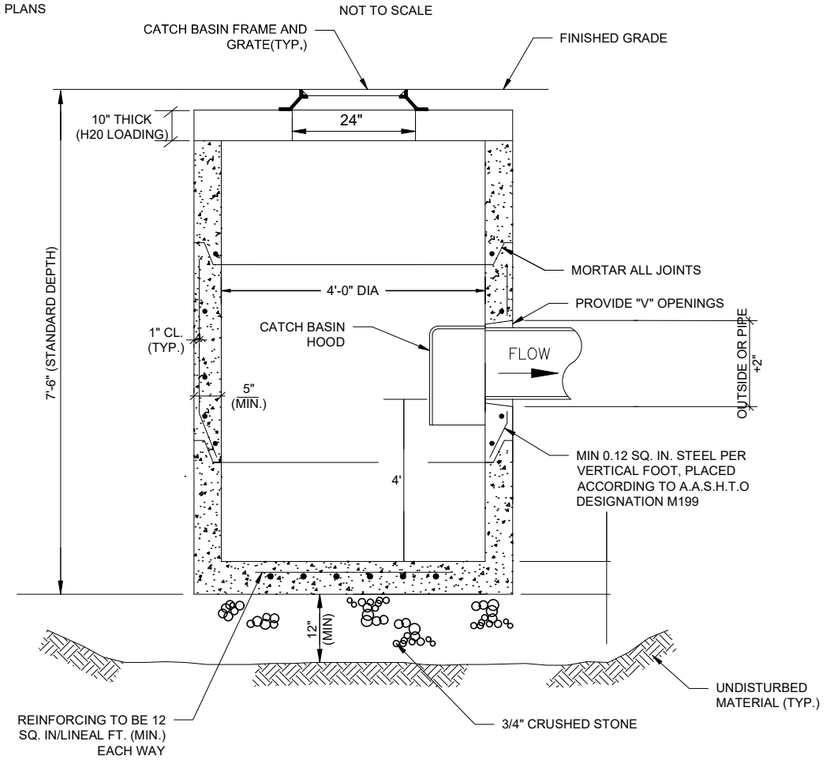

TYPICAL FLAT TOP SLAB CATCH BASIN DETAIL

NOT TO SCALE

CLASS	D (FEET)	D_{50} (INCHES)	LENGTH OF APRON L (FEET)	DEPTH OF APRON H (FEET)	MASSDOT RIPRAP SIZE	STATION
3	4.0	10	12.0	2.0	M2.02.3	34+80
3	6.0	10	12.0	2.0	M2.02.3	45+70
3	5.0	10	20.0	2.0	M2.02.3	63+90

D IS THE CULVERT RISE

SOURCE:

FHWA STANDARD DRAWING C251-50
MASSDOT STANDARD SPECIFICATIONS FOR HIGHWAYS AND BRIDGES

RIRRAP CLASSES AND APRON DIMENSIONS

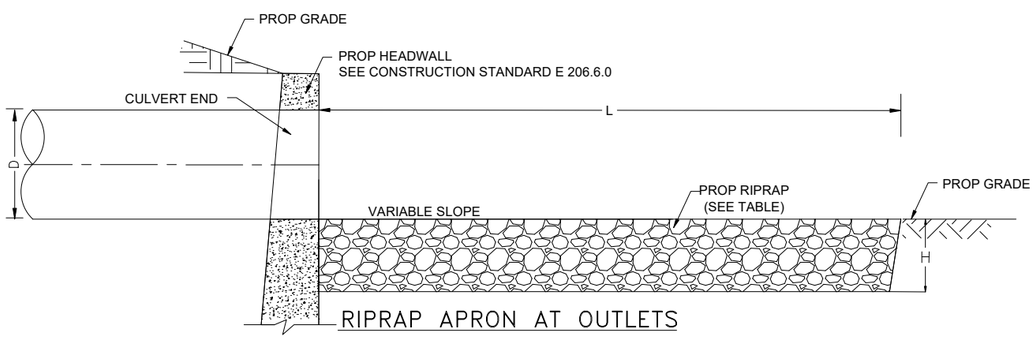

RIPRAP APRON AT OUTLETS

CROSS SECTION VIEW
NOT TO SCALE

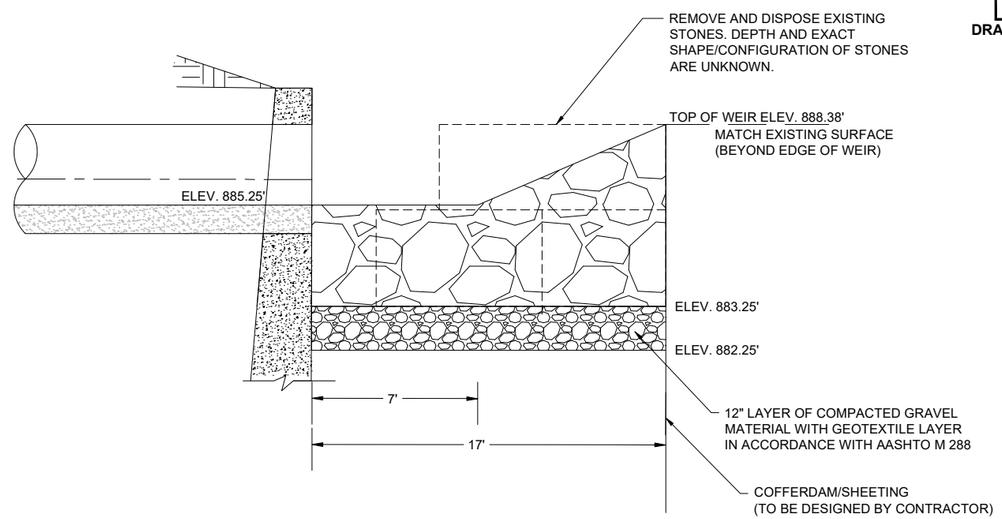

CULVERT INLET AT STA 34+80 SECTION A–A

LONGITUDINAL SECTION
NOT TO SCALE

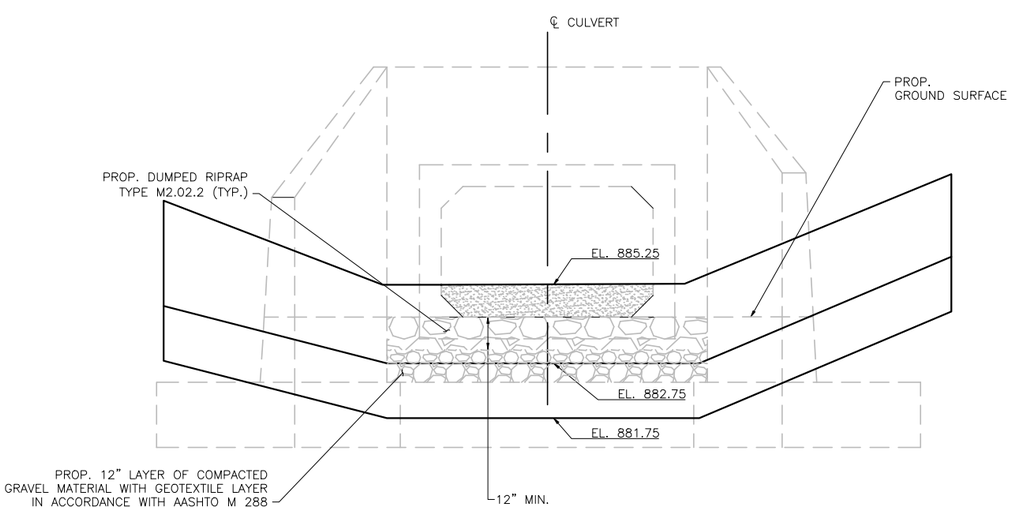

NOTE:
REFER TO STRUCTURAL DRAWINGS FOR ADDITIONAL DETAILS

CULVERT AT STA 34+80 SECTION B–B

CROSS SECTION VIEW
NOT TO SCALE

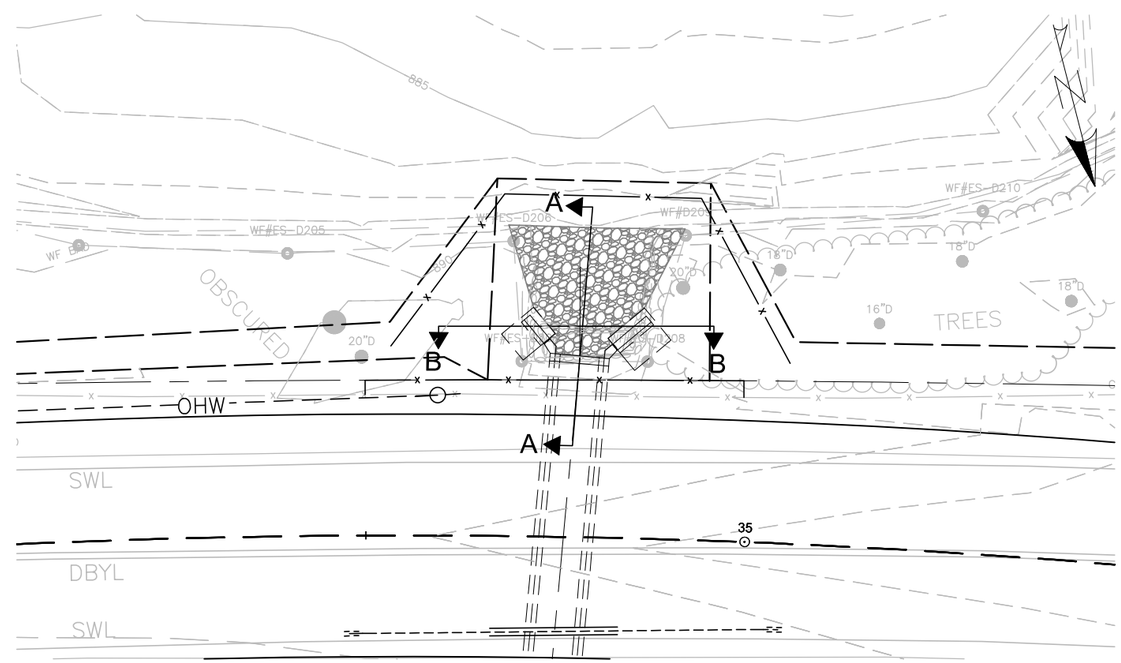

CULVERT AT STA 34+80

PLAN VIEW

0 10 20 30 40

SCALE: 1" = 20'

DRIVEWAY AT #175 WORCESTER ROAD

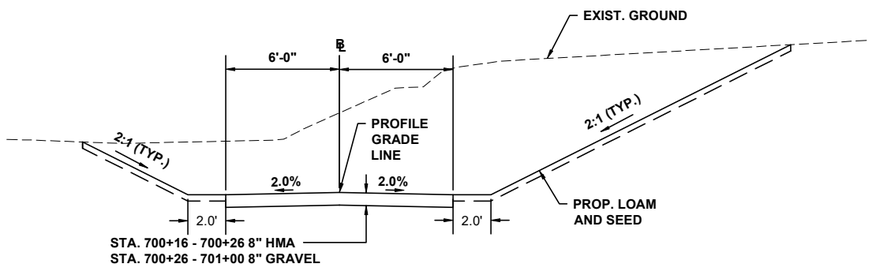

DRIVEWAY AT 175 WORCESTER ROAD

STA. 700+16.00 TO 701+00.00=
SCALE: 1" = 8'

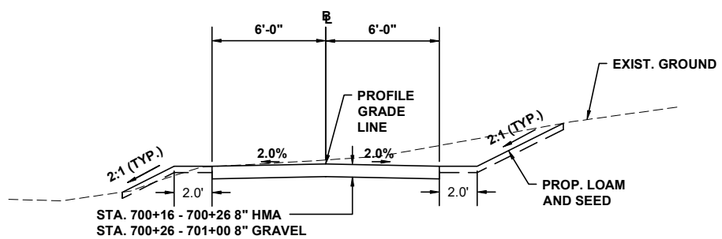

DRIVEWAY AT 175 WORCESTER ROAD

STA. 701+00.00 TO 701+30.00=
SCALE: 1" = 8'

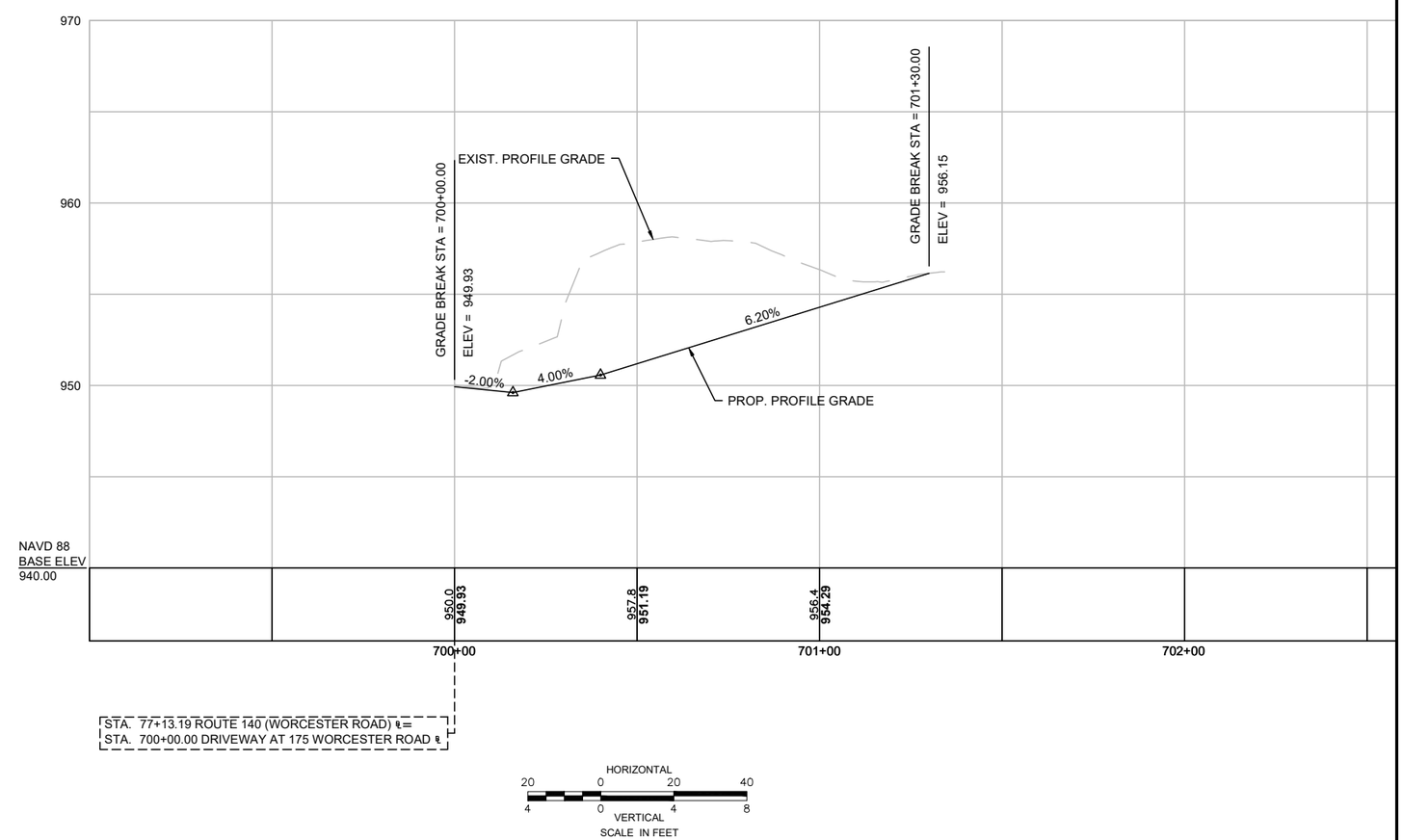

FOR CONSTRUCTION PLAN:
SEE SHEET NO. 23

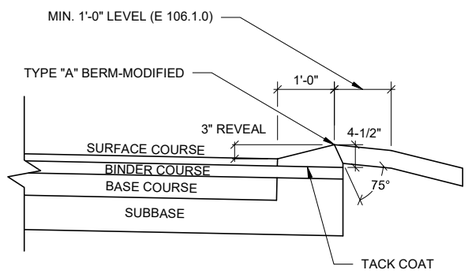

TYPICAL HOT MIX ASPHALT BERM

NOT TO SCALE

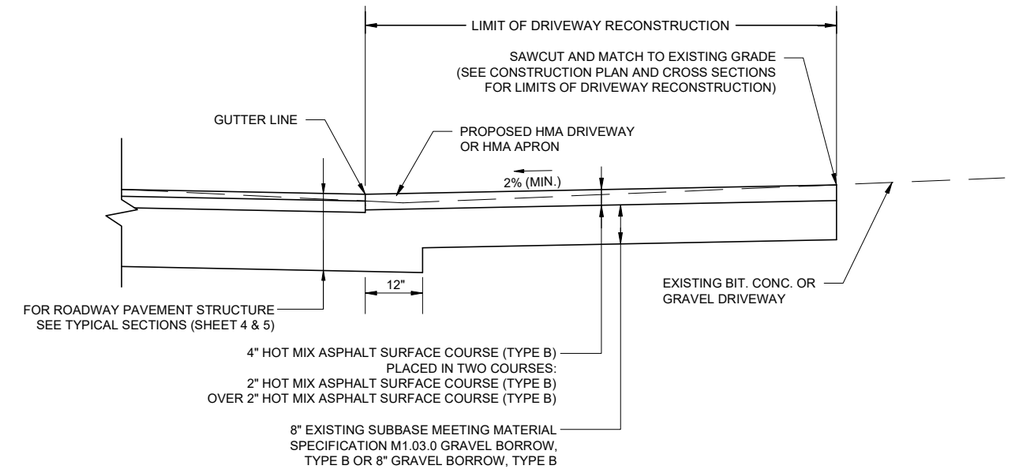

TYPICAL HMA DRIVEWAY/HMA APRON DETAIL

NOT TO SCALE

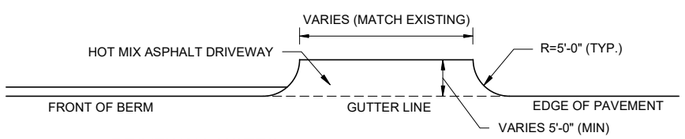

DRIVEWAY NOTES:

1. CONTRACTOR SHALL CONSTRUCT DRIVEWAYS TO MATCH THE EXISTING WIDTH.
2. ALL APRONS SHALL BE A MINIMUM OF 5'-0" LONG.
3. PITCH TO DRAIN.

TYPICAL HMA DRIVEWAY/HMA APRON DETAIL (PLAN)

NOT TO SCALE

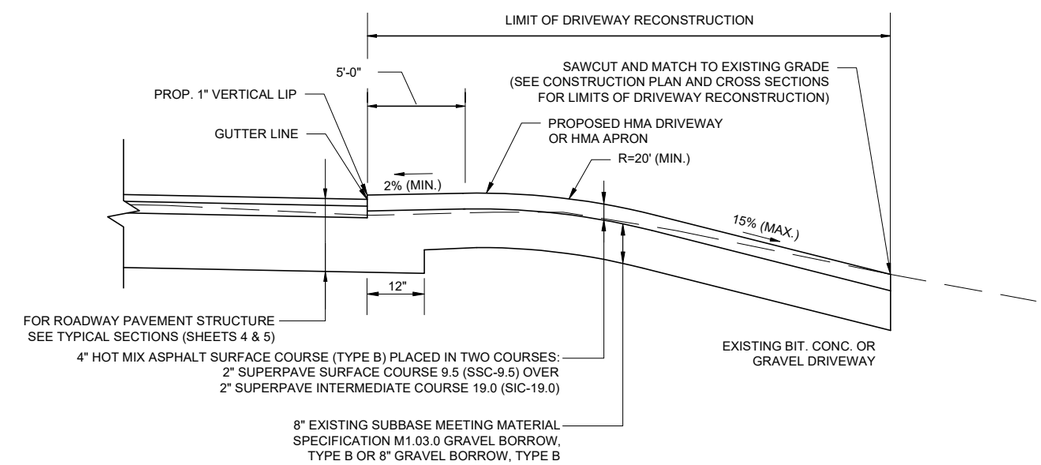

TYPICAL HMA DRIVEWAY/HMA APRON DETAIL FOR DEPRESSED DRIVEWAYS

NOT TO SCALE

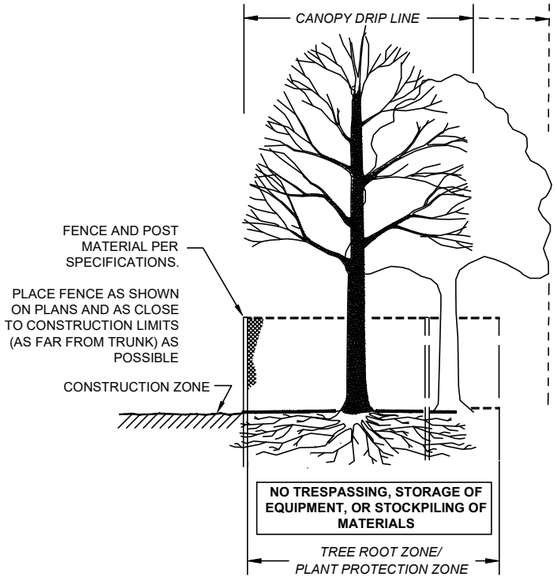

SECTION - FENCE PROTECTION OF ROOT ZONE

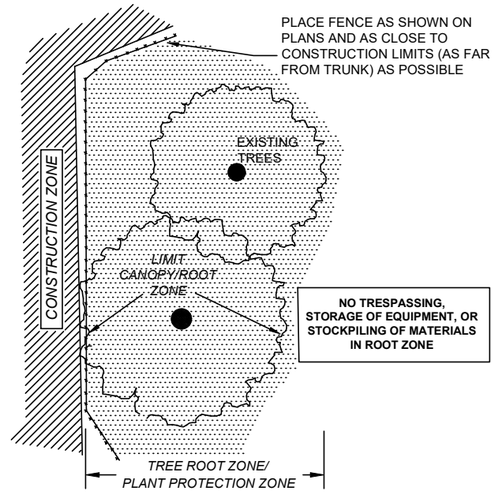

PLAN VIEW - FENCE PROTECTION OF ROOT ZONE

TREE PROTECTION - ROOT ZONE

NOT TO SCALE

EROSION AND SEDIMENT CONTROLS

1. THE CONTRACTOR IS RESPONSIBLE FOR CONTROLLING THE EROSION AND SEDIMENT DURING THE CONSTRUCTION PROCESS. SITE SPECIFIC CONDITIONS MAY REQUIRE MODIFICATIONS IN THE FIELD, BUT THE CONTRACTOR MUST ENSURE THAT THE CHANGES MEET THE MINIMUM REQUIREMENTS OF THIS PLAN AND ARE APPROVED BY THE ENGINEER.
2. IN ORDER TO MINIMIZE EROSION AND SEDIMENT RUNOFF FROM THE SITE, THE CONTRACTOR SHALL MAINTAIN EXISTING VEGETATION WHERE POSSIBLE AND STABILIZE THE DISTURBED PORTIONS OF THE SITE AS QUICKLY AS POSSIBLE. THIS MAY INCLUDE PHASING THE PROJECT AS NEEDED TO MINIMIZE THE SIZE OF THE DISTURBED AREAS ON THE SITE. THE COST OF PHASING THE PROJECT IS INCIDENTAL TO THE CONTRACT.
3. THE CONTRACTOR MUST ALSO ANTICIPATE INCREASED RUNOFF FROM STEEPER SLOPES DURING STORM EVENTS AND DURING HIGH GROUNDWATER CONDITIONS. THIS MAY OCCUR DURING THE WET SEASON (TYPICALLY MARCH THROUGH APRIL) OR AFTER SIGNIFICANT PRECIPITATION EVENTS.
4. THE CONTRACTOR IS RESPONSIBLE FOR THE INSTALLATION OF SEDIMENT CONTROL BARRIER, FLOATING SILT FENCE, DRAINAGE SWALES, EARTH DIKES, CHECK DAMS AND TEMPORARY SEDIMENT BASINS. THESE PRACTICES INCLUDE DIVERTING FLOWS FROM EXPOSED SOILS, LIMITING RUNOFF AND LIMITING THE DISCHARGE OF POLLUTANTS FROM EXPOSED AREAS OF THE SITE TO THE MAXIMUM EXTENT PRACTICABLE AND SHALL BE CONSIDERED INCIDENTAL TO THE CONTRACT.
5. ALL DISTURBED SURFACES SHALL BE STABILIZED WITHIN 14 DAYS AFTER CONSTRUCTION IN ANY PORTION OF THE SITE THAT HAS BEEN COMPLETED OR WHERE CONSTRUCTION HAS TEMPORARILY CEASED.
6. THE CONTRACTOR SHALL, AT ALL TIMES, HAVE A STOCKPILE OF SEDIMENT CONTROL BARRIER, FLOATING SILT FENCE AND SILT FENCE ADEQUATE TO REINFORCE/REPLACE EROSION AND SEDIMENT CONTROL AS NEEDED.
7. THE CONTRACTOR SHALL OBTAIN ANY AND ALL PERMITS ASSOCIATED WITH DEWATERING ACTIVITIES AT NO ADDITIONAL COST TO MASSDOT
8. THE CONTRACTOR SHALL PREPARE AND SUBMIT A NOTICE OF INTENT PER THE NPDES GENERAL PERMIT. REFER TO THE SPECIAL PROVISIONS FOR ADDITIONAL INFORMATION AND REQUIREMENTS.

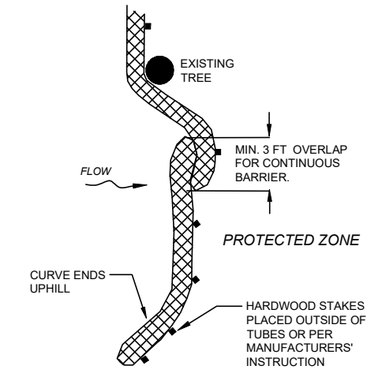

PLACE TUBE ALONG CONTOURS AND PERPENDICULAR TO FLOW.

ADJUST LOCATION AS REQUIRED FOR OPTIMUM EFFECTIVENESS. DO NOT INSTALL IN WATERWAYS.

PLACE STAKES AS NEEDED TO SECURE TUBES IN PLACE.

PLAN VIEW

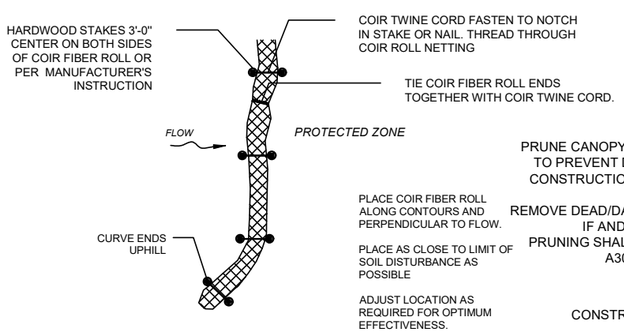

PLAN VIEW

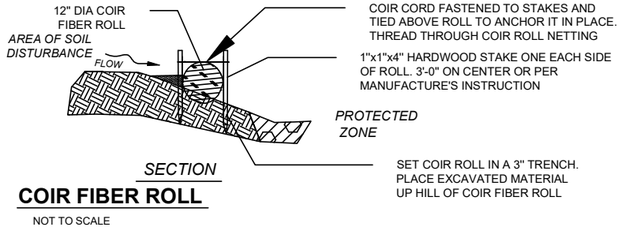

SECTION

COIR FIBER ROLL

NOT TO SCALE

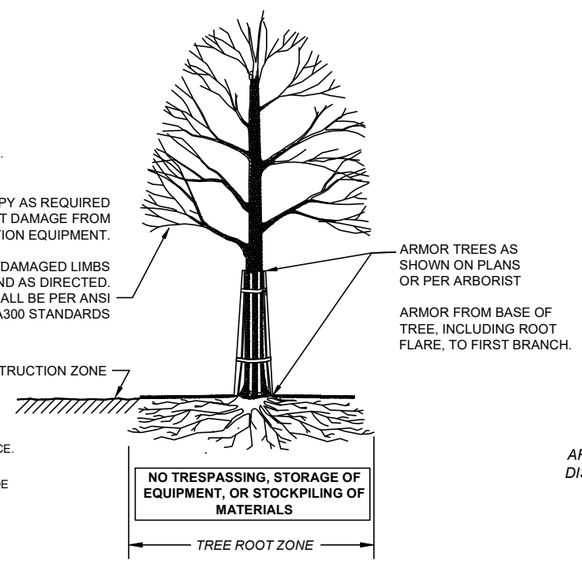

SECTION - TRUNK ARMORING & PRUNING

TREE PROTECTION - TRUNK

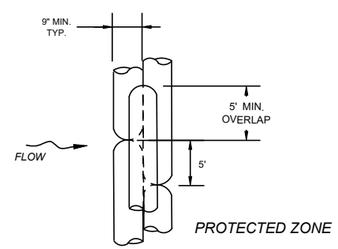

PLAN VIEW

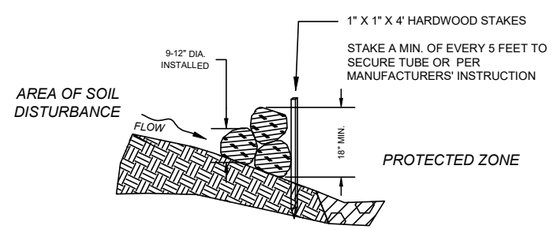

SECTION

COMPOST FILTER TUBE BERM (SLOPES 2:1 OR STEEPER)

NOT TO SCALE

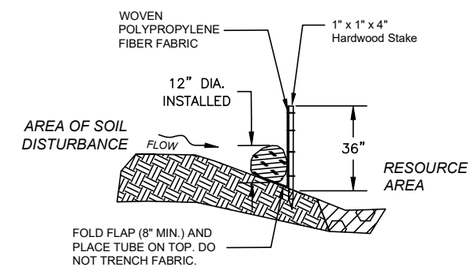

SECTION

COMPOST FILTER TUBE & SILT FENCE

NOT TO SCALE

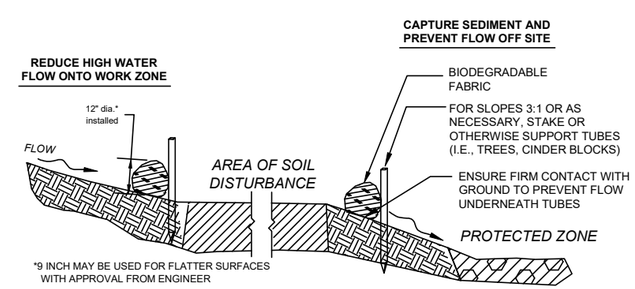

SECTION

SEDIMENT BARRIER - COMPOST FILTER TUBES

NOT TO SCALE

SEDIMENT CONTROL BARRIERS - COMPOST FILTER TUBE & STRAW WATTLES

NOT TO SCALE

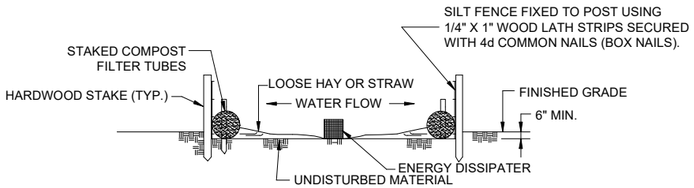

ELEVATION

NOTE:
THIS DETAIL SHOWS ONE METHOD OF SEDIMENTATION CONTROL DURING DEWATERING. PROPOSED DEWATERING DETAILS SHALL BE INCLUDED IN SWPPP SUBMITTAL.

DEWATERING SEDIMENTATION BASIN DETAIL

NOT TO SCALE

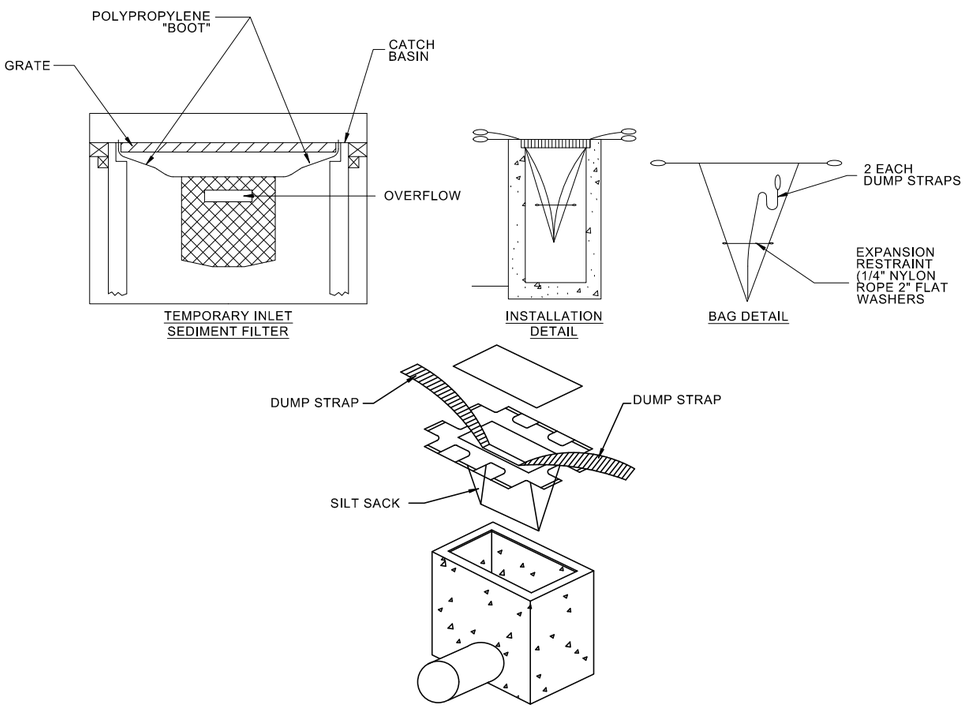

INLET PROTECTION FILTER BAG

NOT TO SCALE

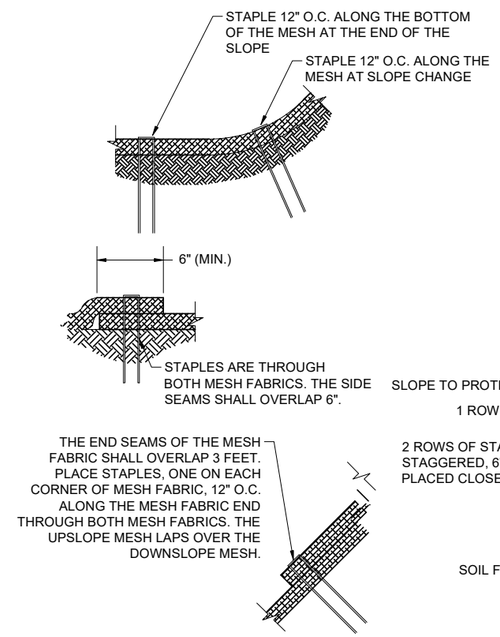

STAPLING DETAILS

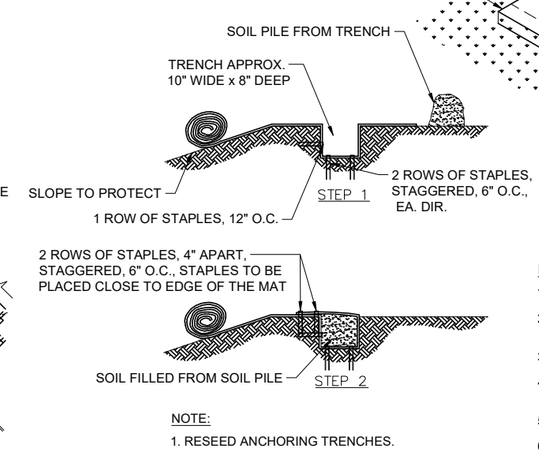

NOTE:
1. RESEED ANCHORING TRENCHES.

ANCHORING TRENCH DETAILS

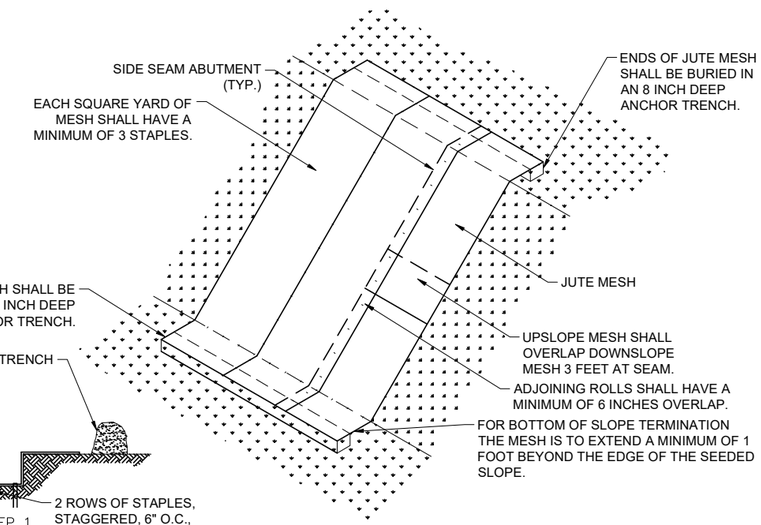

JUTE MESH FABRIC ON SLOPE

NOTES:

1. SEE MANUFACTURER'S STAPLE PATTERN GUIDE FOR DETAILS.
2. INSTALL JUTE MESH ON SLOPES GREATER THAN 3 FEET HORIZONTAL TO 1 FOOT VERTICAL AND WHERE ADDED STABILIZATION FOR EROSION CONTROL IS NEEDED.
3. JUTE MESH SHALL BE INSTALLED WITH CONTINUOUS CONTACT WITH THE SOIL.
4. AREAS WITH JUTE MESH SHALL BE SEEDED PRIOR TO THE INSTALLATION OF THE JUTE MESH.
5. STAPLES SHALL BE DRIVEN IN UNTIL THEIR TOPS ARE FLUSH WITH THE SOIL.
6. STAPLES SHALL BE 11 GAUGE STEEL 6 OR 9 INCHES IN LENGTH. IN AREAS THAT WILL BE MOWN FREQUENTLY EIGHT INCH WOOD STAKES SHALL BE USED TO ANCHOR MESH.
7. JUTE MESH SHALL BE BIODEGRADABLE.

JUTE MESH

NOT TO SCALE

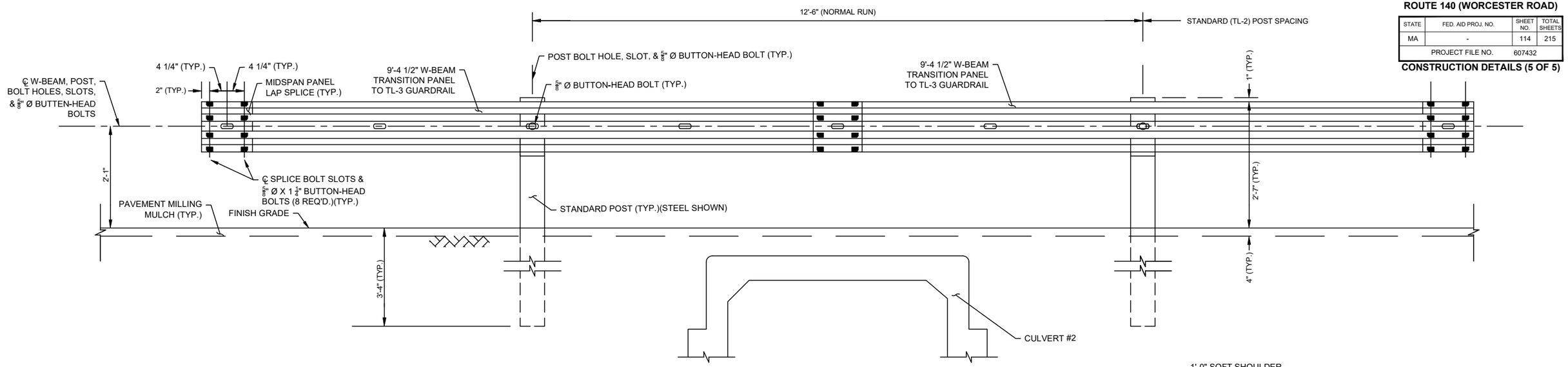

CULVERT #2 TRANSITION TO TL-2 GUARDRAIL

NOT TO SCALE

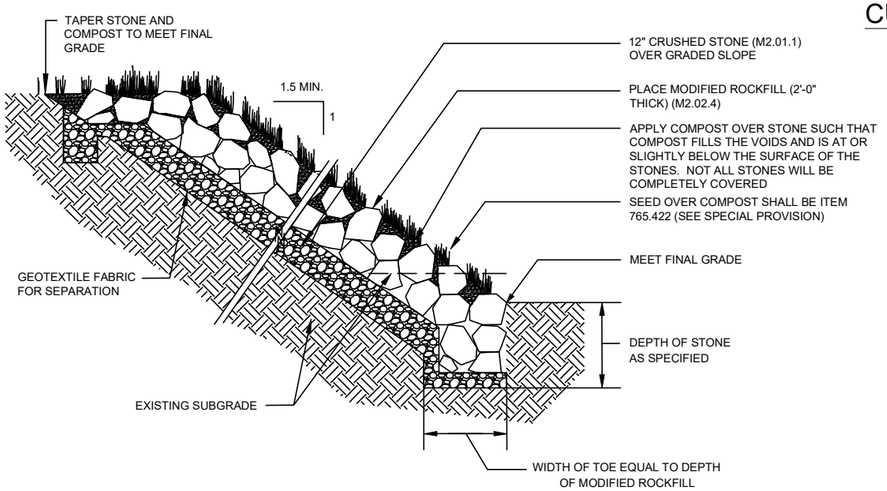

COMPOST AND SEED OVER MODIFIED ROCK FILL

NOT TO SCALE

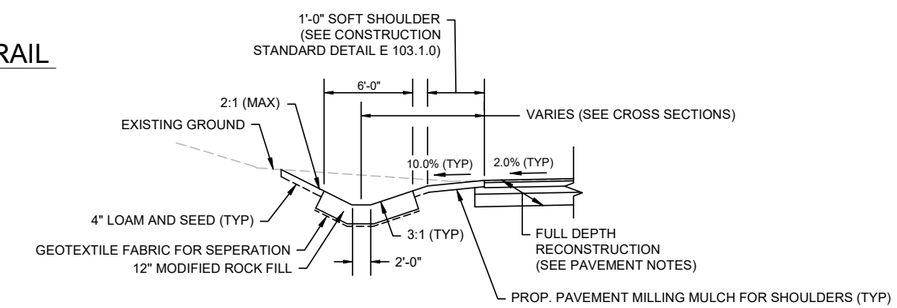

TYPICAL STONE FILLED SWALE

NOT TO SCALE

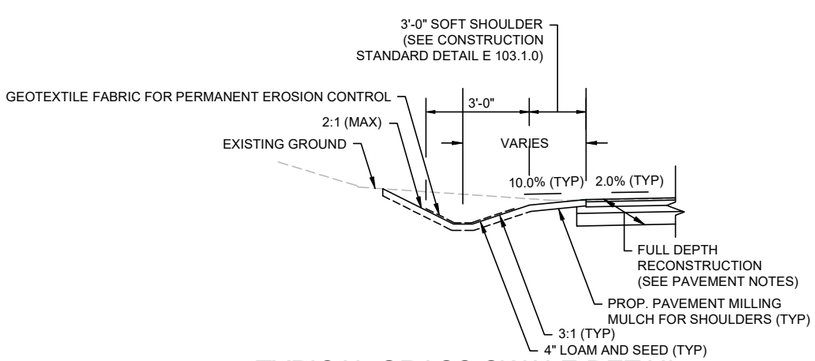

TYPICAL GRASS SWALE DETAIL

NOT TO SCALE

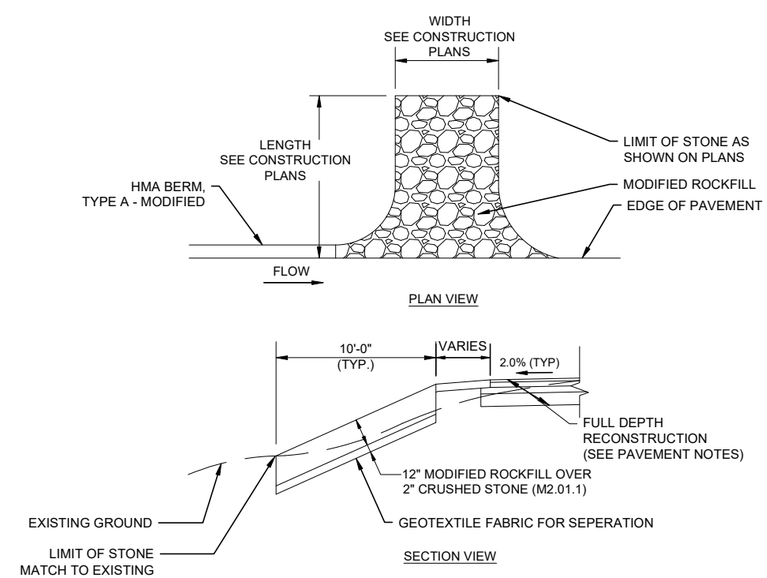

TYPICAL STONE WATERWAY

NOT TO SCALE

WESTMINSTER, MA
ROUTE 140 (WORCESTER ROAD)

STATE	FED. AID PROJ. NO.	SHEET NO.	TOTAL SHEETS
MA	-	115	215
PROJECT FILE NO.	607432		

CULVERT 1 - LAYOUT PLAN AND LONGITUDINAL SECTION

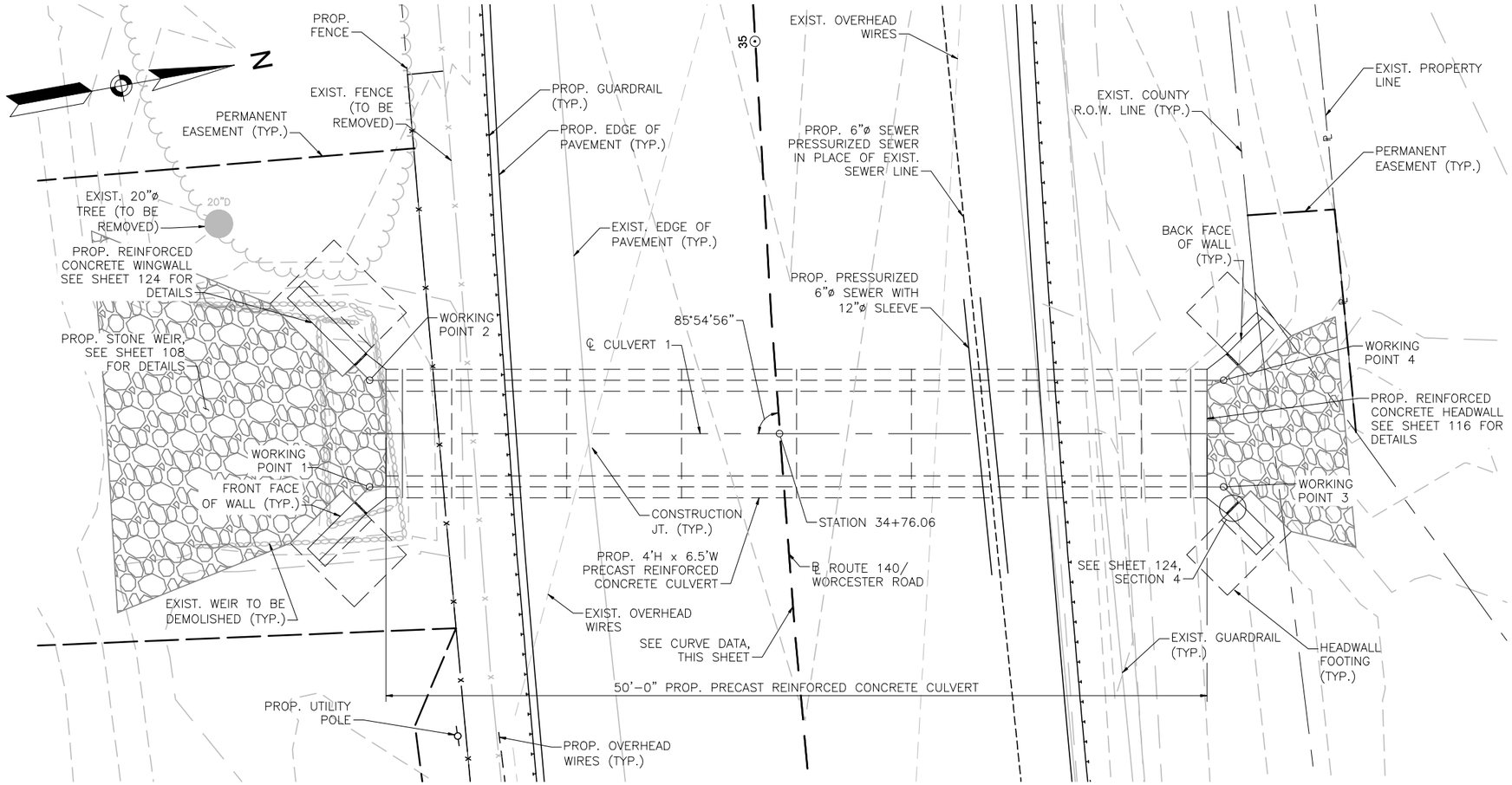

CULVERT NO. 1 PLAN

SCALE: $\frac{1}{8}$" = 1'-0"

WORKING PT.	STA.	OFFSET, FT	NORTHING	EASTING
1	34+74.66	25.13 LT	3012965.81	553019.86
2	34+81.01	24.66 LT	3012968.15	553013.79
3	34+70.73	26.72 RT	3013014.34	553038.55
4	34+77.37	27.21 RT	3013016.67	553032.48

CURVE DATA
Δ=23°13'32"
R=1140.00'
L=462.11'
T=234.27'
PC=STA. 33+87.30
PT=STA. 38+49.41

HYDRAULIC DESIGN DATA

DRAINAGE AREA:	1.53 SQUARE MILES
DESIGN FLOOD DISCHARGE:	155 CUBIC FEET PER SECOND
DESIGN FLOOD FREQUENCY:	2% (50 YEARS)
DESIGN FLOOD VELOCITY:	7.95 FEET PER SECOND
DESIGN FLOOD ELEVATION:	892.06 FEET, NAVD 88

BASE (100-YEAR) FLOOD DATA

BASE FLOOD DISCHARGE:	188 CUBIC FEET PER SECOND
BASE FLOOD ELEVATION:	892.19 FEET, NAVD 88

DESIGN AND CHECK SCOUR DATA

DESIGN SCOUR FLOOD ANNUAL CHANCE (RETURN FREQUENCY):	1% (100 YEARS)
DESIGN FLOOD ABUTMENT SCOUR DEPTH:	N/A
DESIGN FLOOD PIER SCOUR DEPTH:	N/A
CHECK SCOUR FLOOD EVENT ANNUAL CHANCE (RETURN FREQUENCY):	0.5% (200 YEARS)
CHECK FLOOD ABUTMENT SCOUR DEPTH:	N/A
CHECK FLOOD PIER SCOUR DEPTH:	N/A

FLOOD OF RECORD

DISCHARGE:	N/A
FREQUENCY:	N/A
MAXIMUM ELEVATION:	N/A
DATE:	N/A
HISTORY OF ICE FLOES:	N/A
EVIDENCE OF SCOUR OR EROSION:	N/A

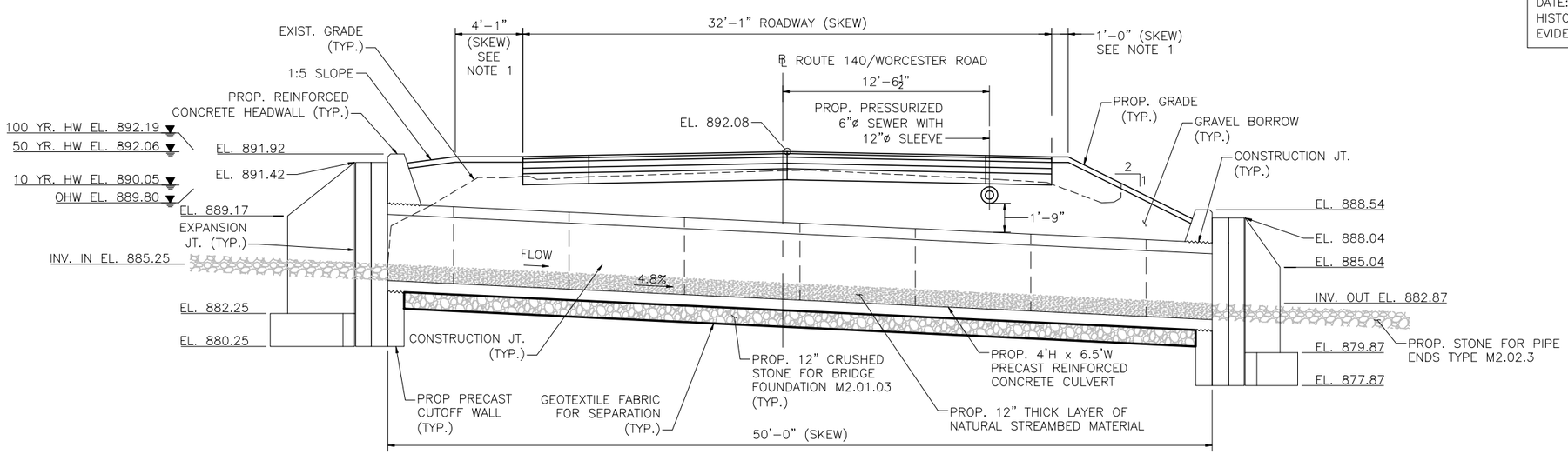

LONGITUDINAL SECTION – STA. 34+80 CULVERT (LOOKING UPSTATION)

SCALE: $\frac{1}{8}$" = 1'-0"

NOTES:

1. PROPOSED GUARDRAIL NOT SHOWN IN CULVERT SECTION FOR CLARITY. SEE "ENCASED POST FOR SHALLOW MOUNT" DETAIL IN MASSDOT CONSTRUCTION STANDARD 400.5.1 FOR GUARDRAIL DETAILS.
2. SEE SHEET 8 FOR TYPICAL APPROACH SECTION, AND SEE SHEET 158 FOR ROADWAY CROSS SECTIONS AT THE CULVERT NO. 1 LOCATION.
3. PRECAST REINFORCED CONCRETE CULVERT CONSTRUCTION JOINT SPACING WILL VARY PER PRECASTER UP TO 7'-0" MAX. SPACING.
4. IF INSTALLATION OF THE CULVERT OCCURS PRIOR TO THE PROPOSED ROADWAY WORK, THEN THE CONTRACTOR SHALL BE RESPONSIBLE FOR RESTORING THE ROADWAY AND GUARDRAIL OVER THE LIMITS OF THE CULVERT AND MATCHING INTO THE APPROACHES TO FACILITATE RE-OPENING OF THE ROADWAY TO TWO WAY TRAFFIC AT THE END OF THE SHORT DURATION CLOSURE. FOR THESE LIMITS, THE RESTORED PAVEMENT CAN BE A 2" HMA LIFT OVER GRAVEL BORROW BACKFILL MATERIAL.

STATE	FED. AID PROJ. NO.	SHEET NO.	TOTAL SHEETS
MA	-	116	215
PROJECT FILE NO.	607432		

CULVERT 1 - HEADWALL ELEVATIONS

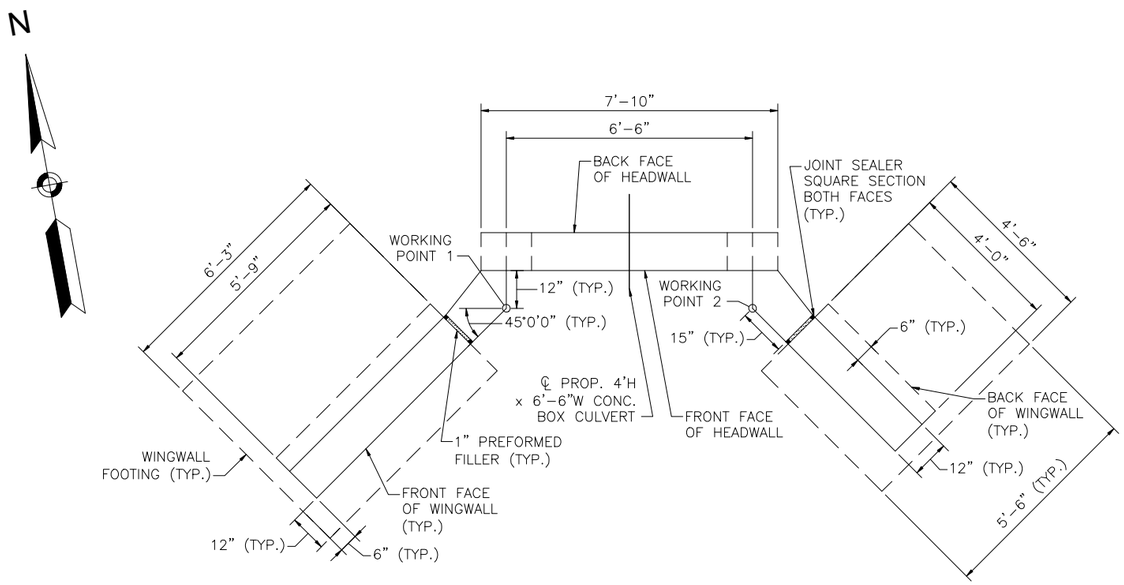

CULVERT 1 – SOUTH HEADWALL/WINGWALLS PLAN

SCALE: $\frac{1}{4}$" = 1'-0"

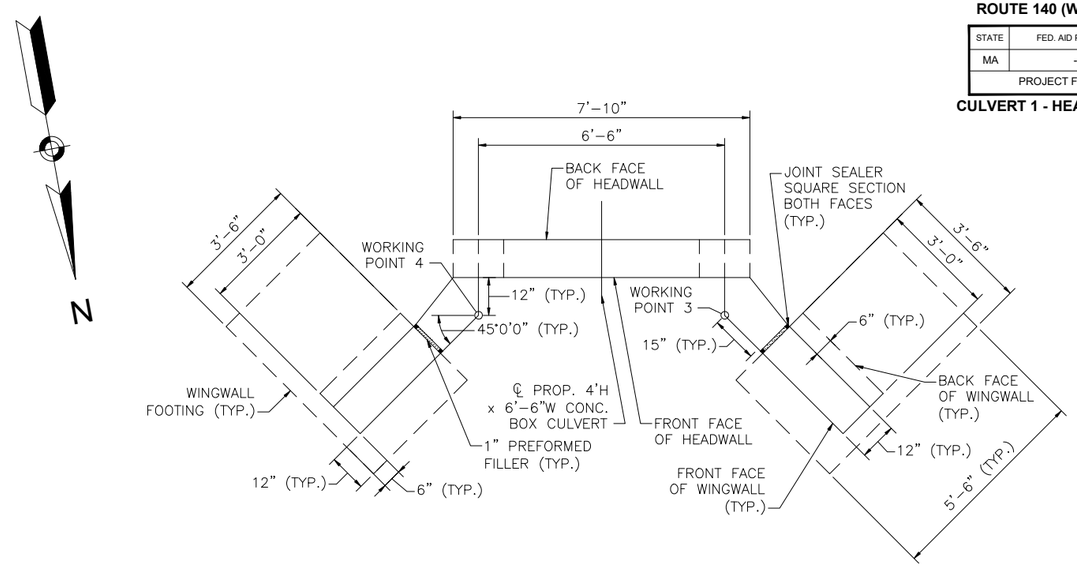

CULVERT 1 – NORTH HEADWALL/WINGWALLS PLAN

SCALE: $\frac{1}{4}$" = 1'-0"

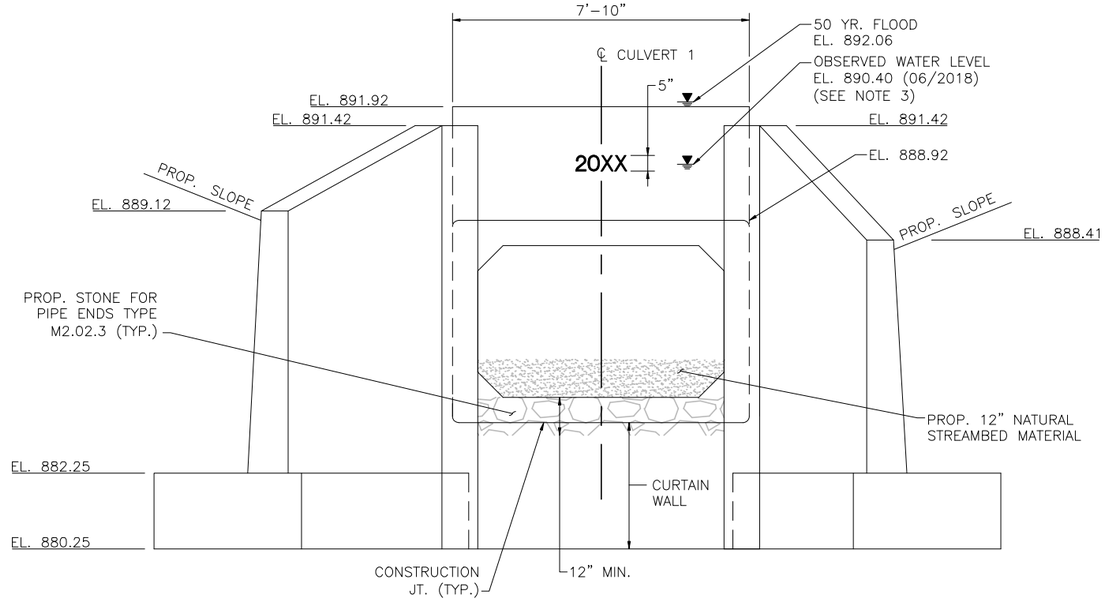

CULVERT 1 – SOUTH HEADWALL/WINGWALLS ELEVATION

SCALE: $\frac{1}{4}$" = 1'-0"

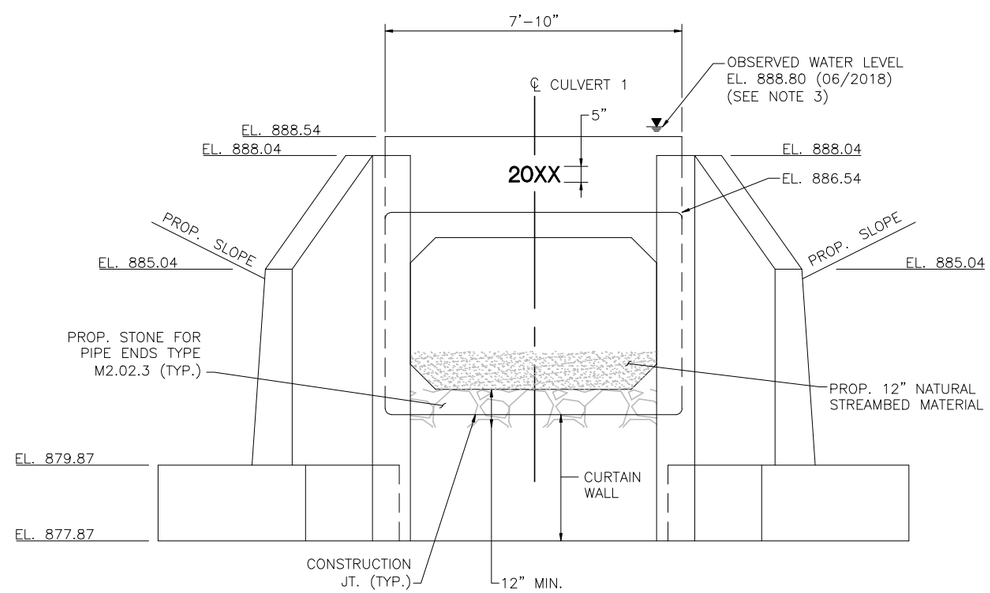

CULVERT 1 – NORTH HEADWALL/WINGWALLS ELEVATION

SCALE: $\frac{1}{4}$" = 1'-0"

NOTES:

1. SEE SHEET 115 FOR GENERAL PLAN AND LONGITUDINAL SECTION OF STRUCTURE.
2. SEE SHEET 124 FOR HEADWALL/WINGWALL REINFORCEMENT DETAILS.
3. THE OBSERVED WATER ELEVATION SHOWN WAS TAKEN FROM THE WATER BODY UPSTREAM OF CULVERT NO. 1 INLET AND THE EXISTING WEIR STRUCTURE. THE WATER ELEVATION BETWEEN THE EXISTING WEIR STRUCTURE AND THE CULVERT INLET WAS NOT MEASURED ON 06/2018.

WESTMINSTER, MA
ROUTE 140 (WORCESTER ROAD)

STATE	FED. AID PROJ. NO.	SHEET NO.	TOTAL SHEETS
MA	-	117	215
PROJECT FILE NO.	607432		

CULVERT 1 - BOX CULVERT SECTIONS

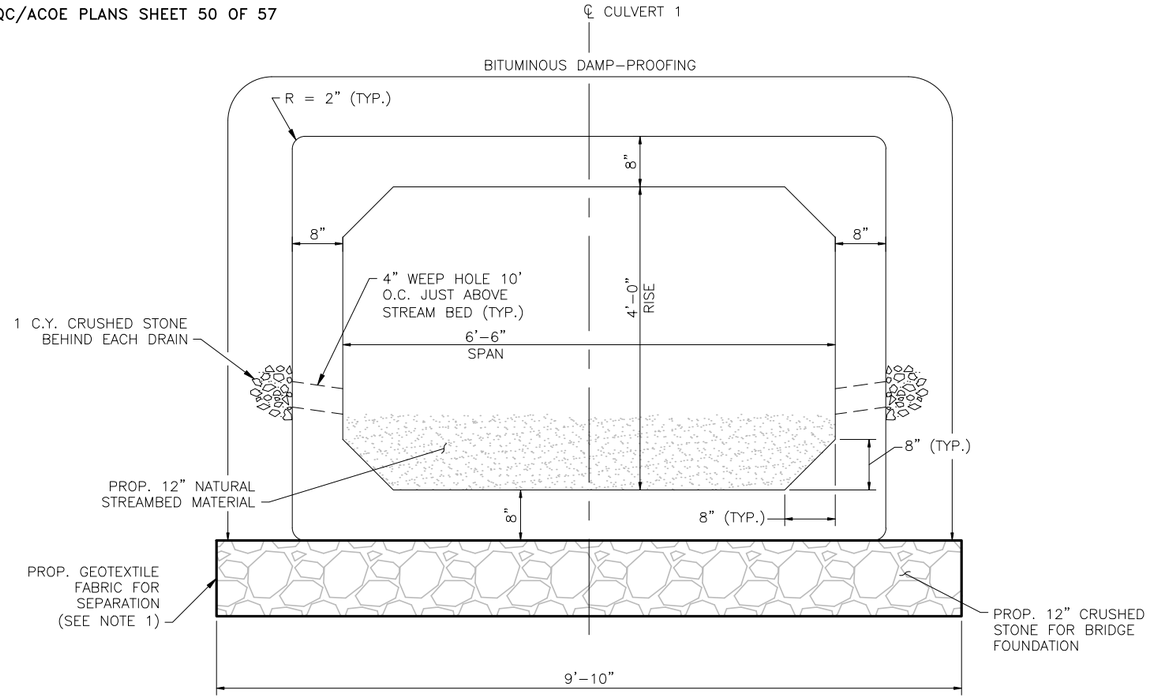

CULVERT 1 – BOX CULVERT TYPICAL SECTION

SCALE: 1" = 2'-0"

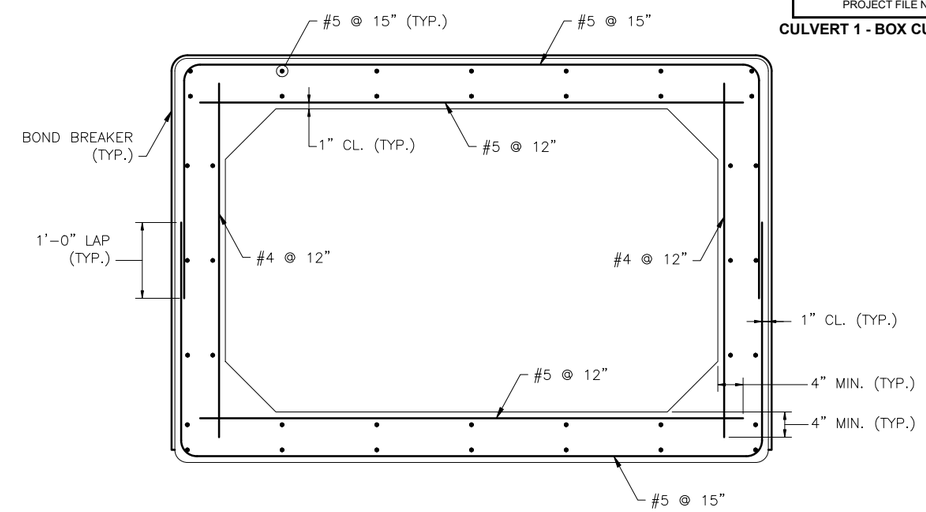

CULVERT 1 – BOX CULVERT REINFORCING DETAILS

SCALE: 1" = 2'-0"

NOTES:

1. PROPOSED GEOTEXTILE FABRIC TO ENVELOP LIMITS OF 12" CRUSHED STONE FOR BRIDGE FOUNDATION WITH MINIMUM 2'-0" OVERLAP AT SEAM.
2. BOX CULVERT TO BE 5000 PSI, ¾ IN, 685 HP CEMENT CONCRETE.
3. THE MAXIMUM FACTORED BEARING PRESSURE = 4.08 KSF AS PER AASHTO LRFD BRIDGE DESIGN SPECIFICATIONS STRENGTH I LOAD COMBINATION. FACTORED BEARING RESISTANCE = 6.23 KSF. FACTORED BEARING RESISTANCE IS THE PRODUCT OF THE NOMINAL BEARING RESISTANCE AND A RESISTANCE FACTOR OF 0.45.
4. TRANSVERSE REINFORCING SHALL BE PLACED NORMAL TO THE ℄ OF THE CULVERT.

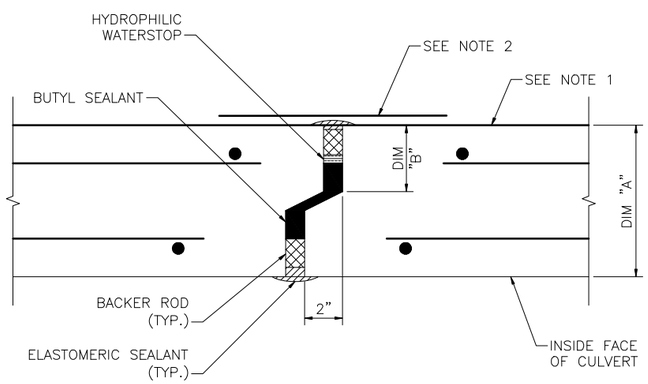

NOTES:

1. CULVERT NO. 2 ONLY, A TWO FOOT WIDE STRIP OF ADDITIONAL MEMBRANE WATERPROOFING SHALL BE APPLIED AT JOINT. THE MEMBRANE SHALL BE CENTERED ON THE JOINT AND SHALL RUN THE ENTIRE PERIMETER OF THE JOINT. THIS DOES NOT APPLY TO CULVERTS NO. 1 AND NO. 3
2. CULVERT NO. 2 ONLY, ADDITIONAL MEMBRANE WATERPROOFING SHALL BE WRAPPED ON THE OUTSIDE OF TYPICAL MEMBRANE WATERPROOFING AT THE TOP SLAB AND SIDE WALLS, AND ON THE INSIDE OF TYPICAL MEMBRANE WATERPROOFING AT THE BOTTOM SLAB. THIS DOES NOT APPLY TO CULVERTS NO. 1 AND NO. 3.

BOX CULVERT TYPICAL CONSTRUCTION JOINT DETAILS

SCALE: 3" = 2' - 0"

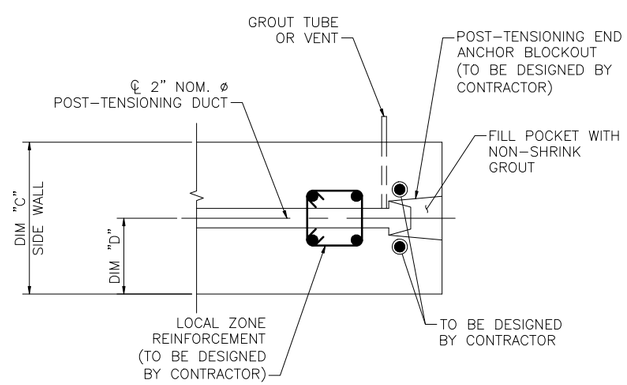

POST-TENSIONING ANCHORAGE ASSEMBLY

SCALE: 3" = 2' - 0"

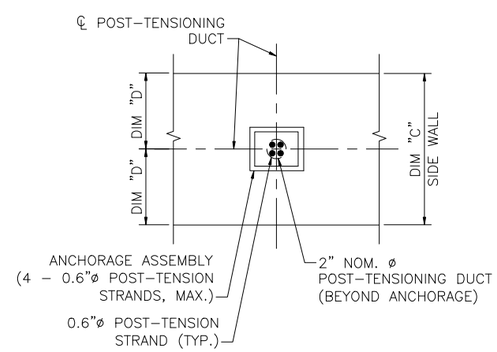

END VIEW OF POST-TENSIONING ANCHORAGE ASSEMBLY

SCALE: 3" = 2' - 0"

BOX CULVERT CONSTRUCTION JOINT DIMENSIONS

CULVERT	DIM "A" TOP SLAB	DIM "A" BOT. SLAB & SIDE WALLS	DIM "B" TOP SLAB	DIM "B" BOT. SLAB & SIDE WALLS	DIM "C"	DIM "D"
CULVERT 1	8"	8"	3½"	3½"	8"	4"
CULVERT 2	8"	7"	3½"	3"	7"	3½"
CULVERT 3	7"	7"	3"	3"	7"	3½"

WESTMINSTER, MA
ROUTE 140 (WORCESTER ROAD)

STATE	FED. AID PROJ. NO.	SHEET NO.	TOTAL SHEETS
MA	-	118	215
PROJECT FILE NO.	607432		

CULVERT 2 - LAYOUT PLAN AND LONGITUDINAL SECTION

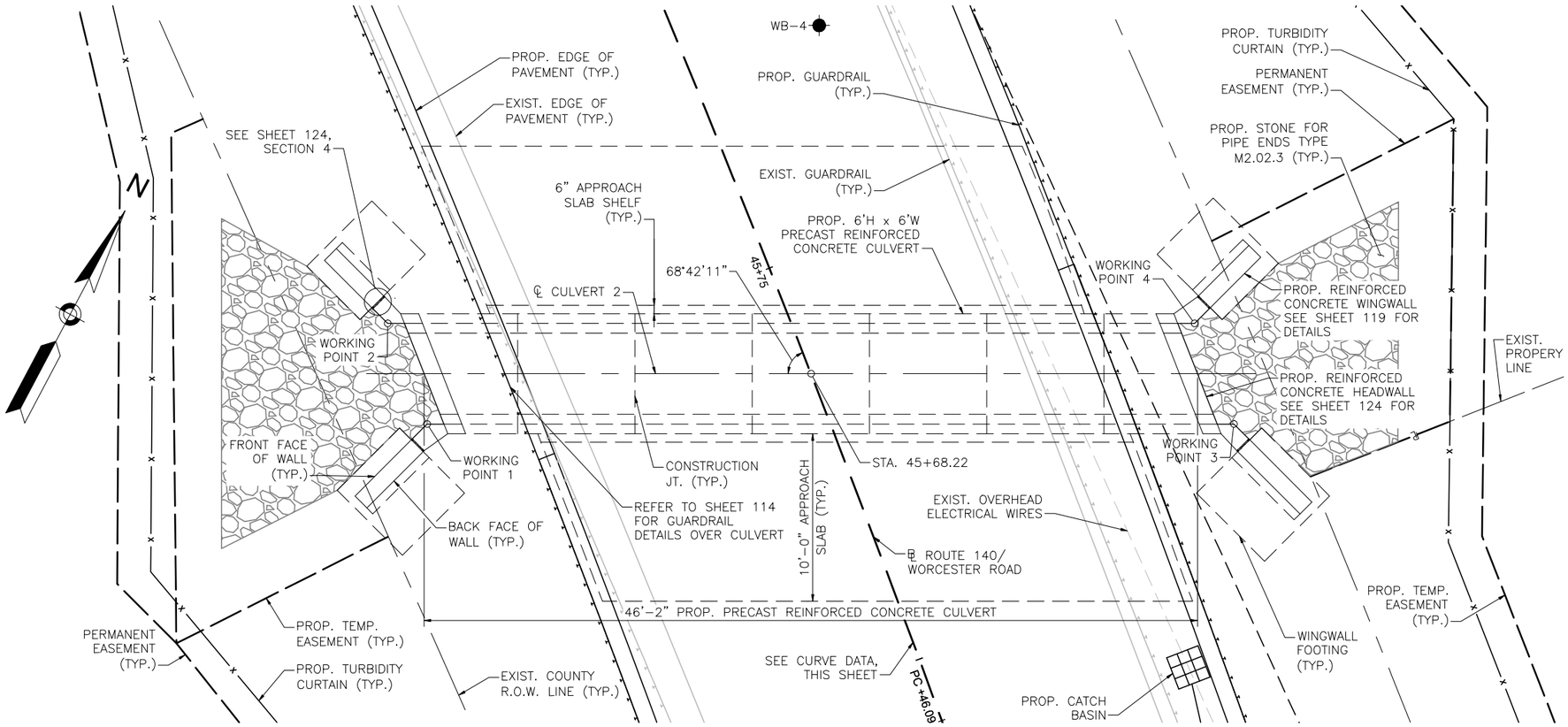

CULVERT NO. 2 PLAN

SCALE: $\frac{1}{8}$" = 1'-0"

WORKING PT.	STA.	OFFSET R, FT	NORTHING	EASTING
1	45+73.88	23.43 LT	3013595.79	552117.62
2	45+80.47	22.38 LT	3013599.99	552112.73
3	45+56.52	22.50 RT	3013618.35	552160.17
4	45+62.82	22.44 RT	3013622.55	552155.29

CURVE DATA:
Δ=13°11'13"
R=1000.00'
L=230.15'
T=115.59'

HYDRAULIC DESIGN DATA

DRAINAGE AREA:	1.37 SQUARE MILES
DESIGN FLOOD DISCHARGE:	192 CUBIC FEET PER SECOND
DESIGN FLOOD FREQUENCY:	2% (50 YEARS)
DESIGN FLOOD VELOCITY:	6.72 FEET PER SECOND
DESIGN FLOOD ELEVATION:	890.94 FEET, NAVD 88

BASE (100-YEAR) FLOOD DATA

BASE FLOOD DISCHARGE:	221 CUBIC FEET PER SECOND
BASE FLOOD ELEVATION:	891.36 FEET, NAVD 88

DESIGN AND CHECK SCOUR DATA

DESIGN SCOUR FLOOD ANNUAL CHANCE (RETURN FREQUENCY):	1% (100 YEARS)
DESIGN FLOOD ABUTMENT SCOUR DEPTH:	N/A
DESIGN FLOOD PIER SCOUR DEPTH:	N/A
CHECK SCOUR FLOOD EVENT ANNUAL CHANCE (RETURN FREQUENCY):	0.5% (200 YEARS)
CHECK FLOOD ABUTMENT SCOUR DEPTH:	N/A
CHECK FLOOD PIER SCOUR DEPTH:	N/A

FLOOD OF RECORD

DISCHARGE:	N/A
FREQUENCY:	N/A
MAXIMUM ELEVATION:	N/A
DATE:	N/A
HISTORY OF ICE FLOES:	N/A
EVIDENCE OF SCOUR OR EROSION:	N/A

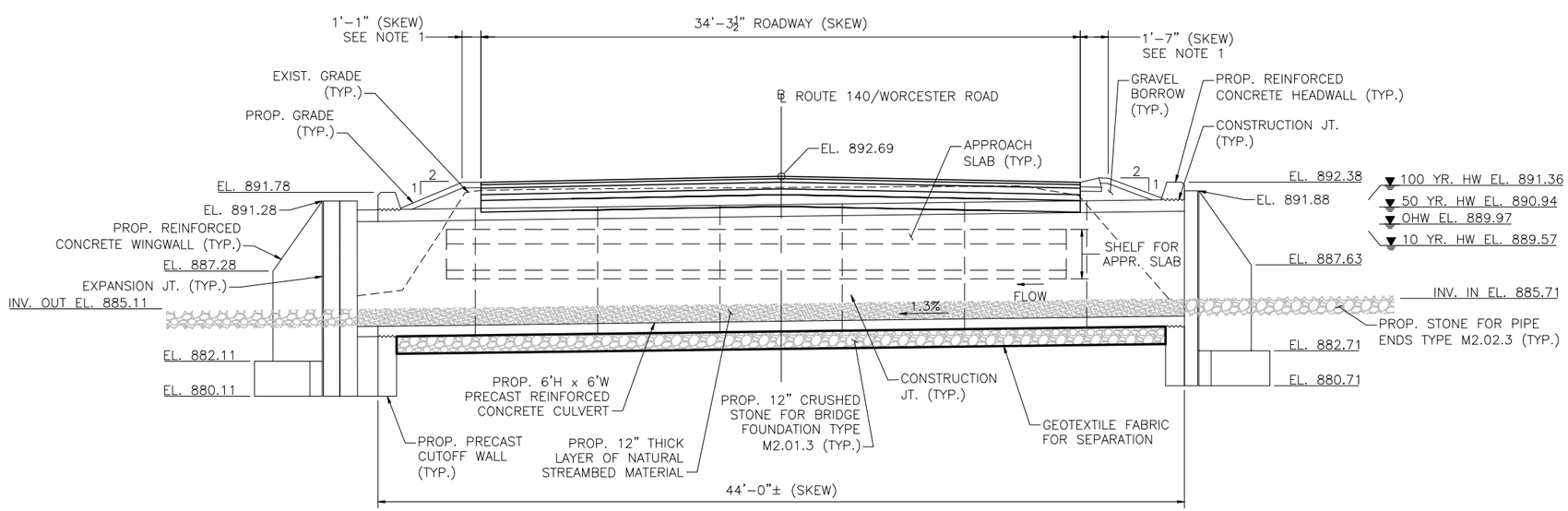

LONGITUDINAL SECTION – STA. 45+70 CULVERT (LOOKING UPSTATION)

SCALE: $\frac{1}{8}$" = 1'-0"

NOTES:

1. PROPOSED GUARDRAIL NOT SHOWN IN CULVERT SECTION FOR CLARITY. SEE SHEET 114 FOR GUARDRAIL DETAILS.
2. SEE SHEET 8 FOR TYPICAL APPROACH SECTION, AND SEE SHEET 169 FOR ROADWAY CROSS SECTIONS AT THE CULVERT NO. 2 LOCATION.
3. PRECAST REINFORCED CONCRETE CULVERT CONSTRUCTION JOINT SPACING WILL VARY PER PRECASTER UP TO 7'-0" MAX. SPACING.
4. FACE OF PRECAST REINFORCED CONCRETE CULVERT TO BE SKEWED AND WILL REQUIRE SPECIAL FABRICATION BY THE PRECASTER.
5. THE OBSERVED WATER ELEVATION SHOWN IN THE "CULVERT 2 – EAST HEADWALL/WINGWALLS ELEVATION" DETAIL AT THE UPSTREAM END OF THE PROPOSED CULVERT IS EL. 888.80 (06/2018).
6. IF INSTALLATION OF THE CULVERT OCCURS PRIOR TO THE PROPOSED ROADWAY WORK, THEN THE CONTRACTOR SHALL BE RESPONSIBLE FOR RESTORING THE ROADWAY AND GUARDRAIL OVER THE LIMITS OF THE CULVERT AND MATCHING INTO THE APPROACHES TO FACILITATE RE-OPENING OF THE ROADWAY TO TWO WAY TRAFFIC AT THE END OF THE SHORT DURATION CLOSURE. FOR THESE LIMITS, THE RESTORED PAVEMENT CAN BE A 2" HMA LIFT OVER GRAVEL BORROW BACKFILL MATERIAL.

WESTMINSTER, MA
ROUTE 140 (WORCESTER ROAD)

STATE	FED. AID PROJ. NO.	SHEET NO.	TOTAL SHEETS
MA	-	119	215
PROJECT FILE NO.	607432		

CULVERT 2 - HEADWALL ELEVATIONS

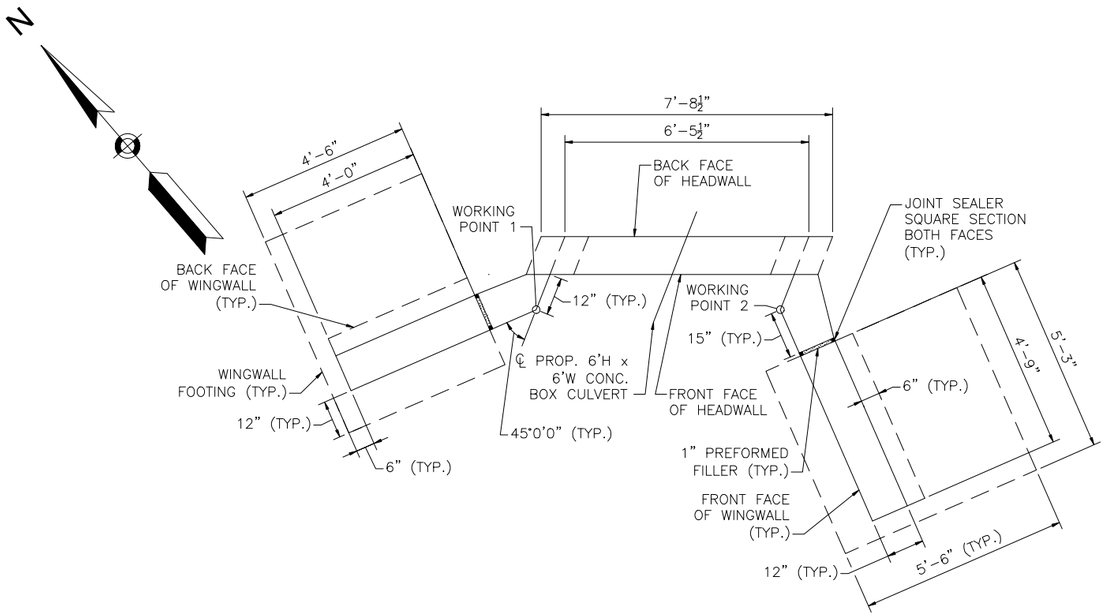

CULVERT 2 – WEST HEADWALL/WINGWALLS PLAN

SCALE: ¼" = 1'-0"

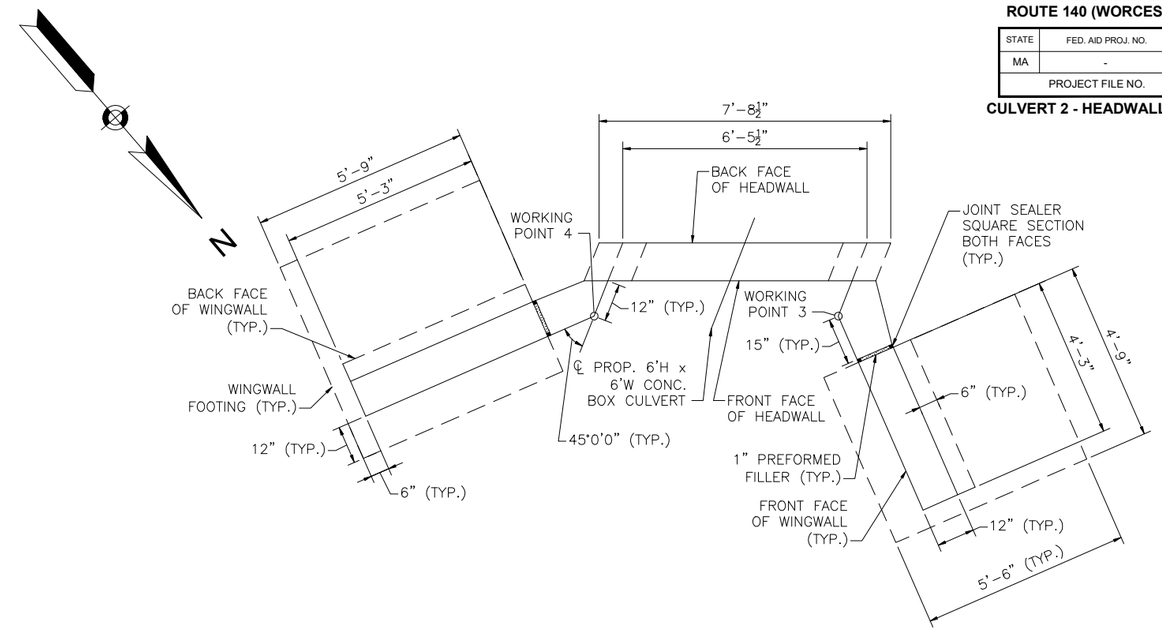

CULVERT 2 – EAST HEADWALL/WINGWALLS PLAN

SCALE: ¼" = 1'-0"

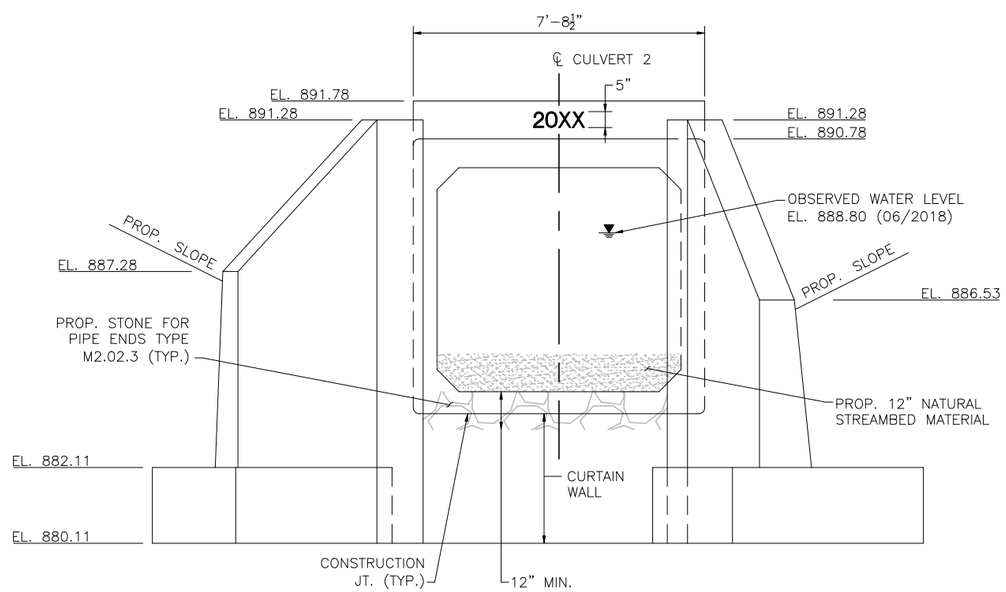

CULVERT 2 – WEST HEADWALL/WINGWALLS ELEVATION

SCALE: ¼" = 1'-0"

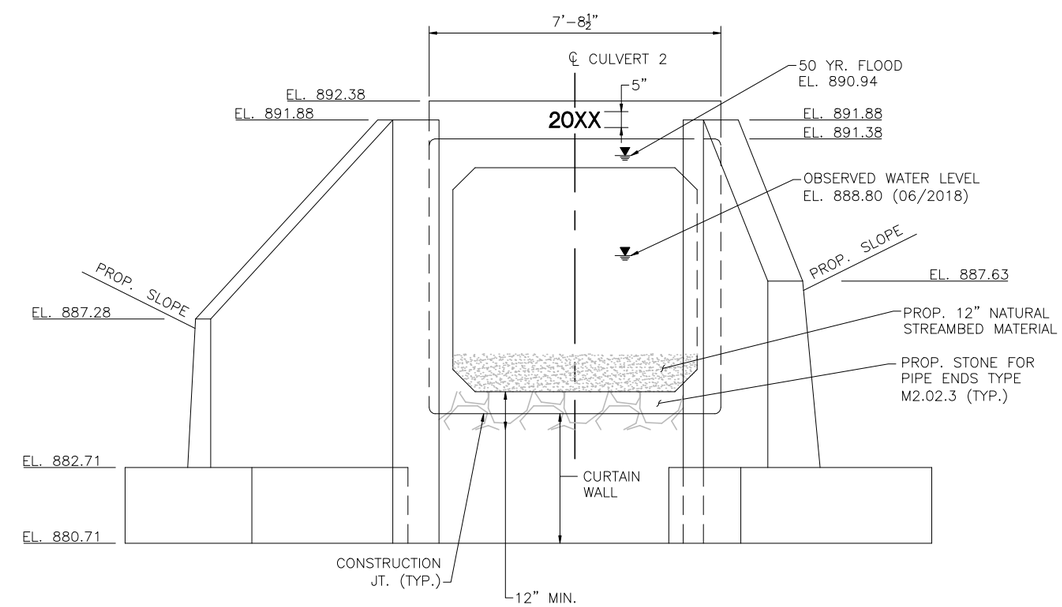

CULVERT 2 – EAST HEADWALL/WINGWALLS ELEVATION

SCALE: ¼" = 1'-0"

NOTES:

1. SEE SHEET 118 FOR GENERAL PLAN AND LONGITUDINAL SECTION OF STRUCTURE.
2. SEE SHEET 124 FOR HEADWALL/WINGWALL REINFORCEMENT DETAILS.

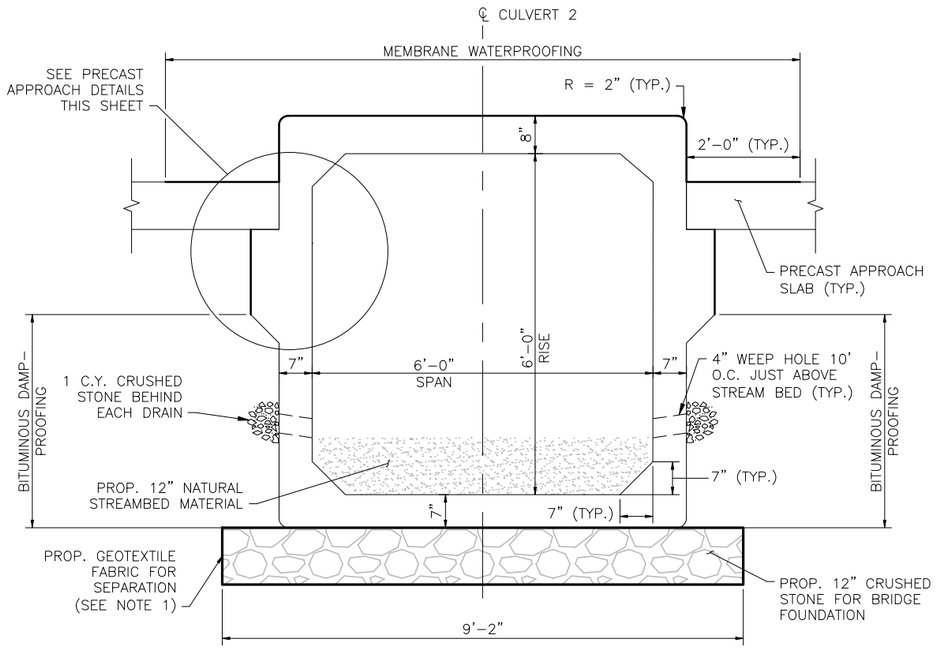

NOTES

1. PROPOSED GEOTEXTILE FABRIC TO ENVELOP LIMITS OF 12" CRUSHED STONE FOR BRIDGE FOUNDATION WITH MINIMUM 2'–0" OVERLAP AT SEAM.
2. BOX CULVERT TO BE 5000 PSI, $\frac{3}{4}$ IN, 685 HP CEMENT CONCRETE.
3. THE MAXIMUM FACTORED BEARING PRESSURE = 6.99 KSF AS PER AASHTO LRFD BRIDGE DESIGN SPECIFICATIONS STRENGTH I LOAD COMBINATION. FACTORED BEARING RESISTANCE = 9.77 KSF. FACTORED BEARING RESISTANCE IS THE PRODUCT OF THE NOMINAL BEARING RESISTANCE AND A RESISTANCE FACTOR OF 0.45.

CULVERT 2 – BOX CULVERT TYPICAL SECTION

SCALE: $\frac{3}{8}$" = 1'–0"

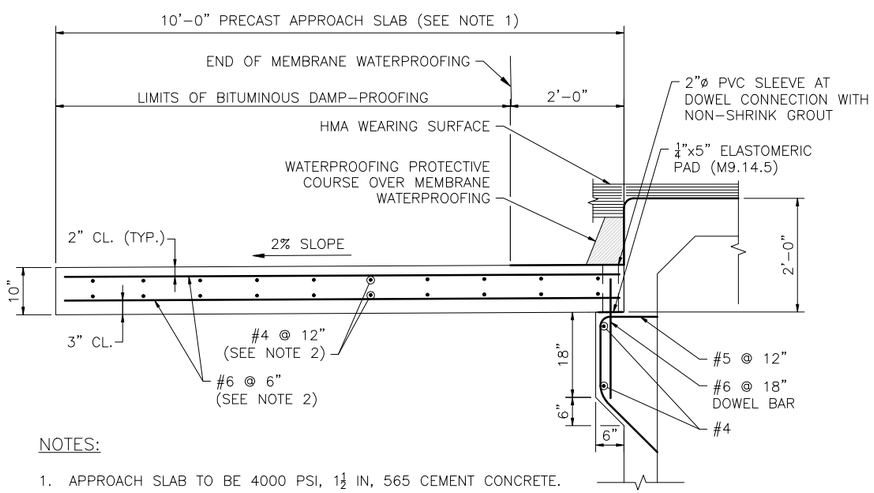

NOTES:

1. APPROACH SLAB TO BE 4000 PSI, $1\frac{1}{2}$ IN, 565 CEMENT CONCRETE.
2. PLACE LONGITUDINAL REINFORCEMENT PERPENDICULAR TO BOX CULVERT. PLACE TRANSVERSE REINFORCEMENT PARALLEL TO BOX CULVERT.

PRECAST APPROACH SLAB DETAILS

SCALE: $\frac{3}{8}$" = 1'–0"

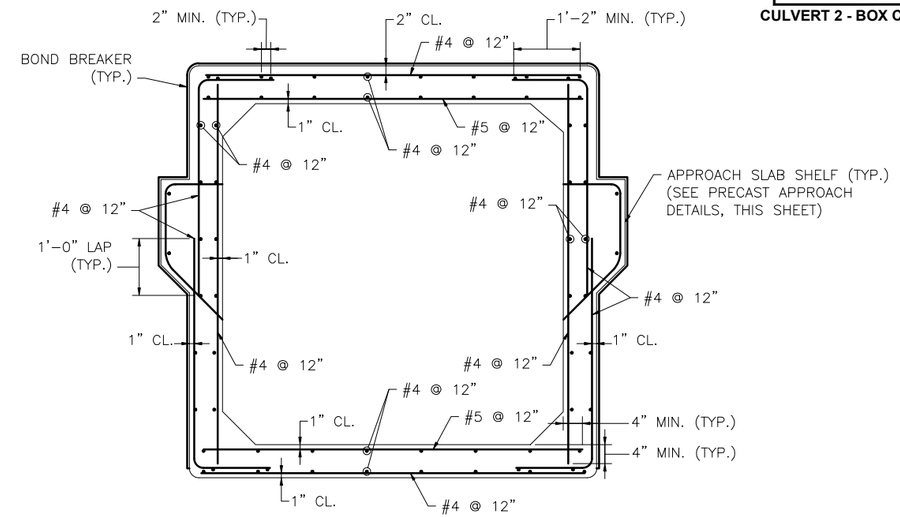

NOTE

TRANSVERSE REINFORCING SHALL BE PLACED NORMAL TO THE ℄ OF THE CULVERT.

CULVERT 2 – BOX CULVERT REINFORCING DETAILS

SCALE: $\frac{3}{8}$" = 1'–0"

NOTE

SEE SHEET 117 FOR BOX CULVERT CONSTRUCTION JOINT DETAILS.

WESTMINSTER, MA
ROUTE 140 (WORCESTER ROAD)

STATE	FED. AID PROJ. NO.	SHEET NO.	TOTAL SHEETS
MA	-	121	215
PROJECT FILE NO.	607432		

CULVERT 3 - LAYOUT PLAN AND LONGITUDINAL SECTION

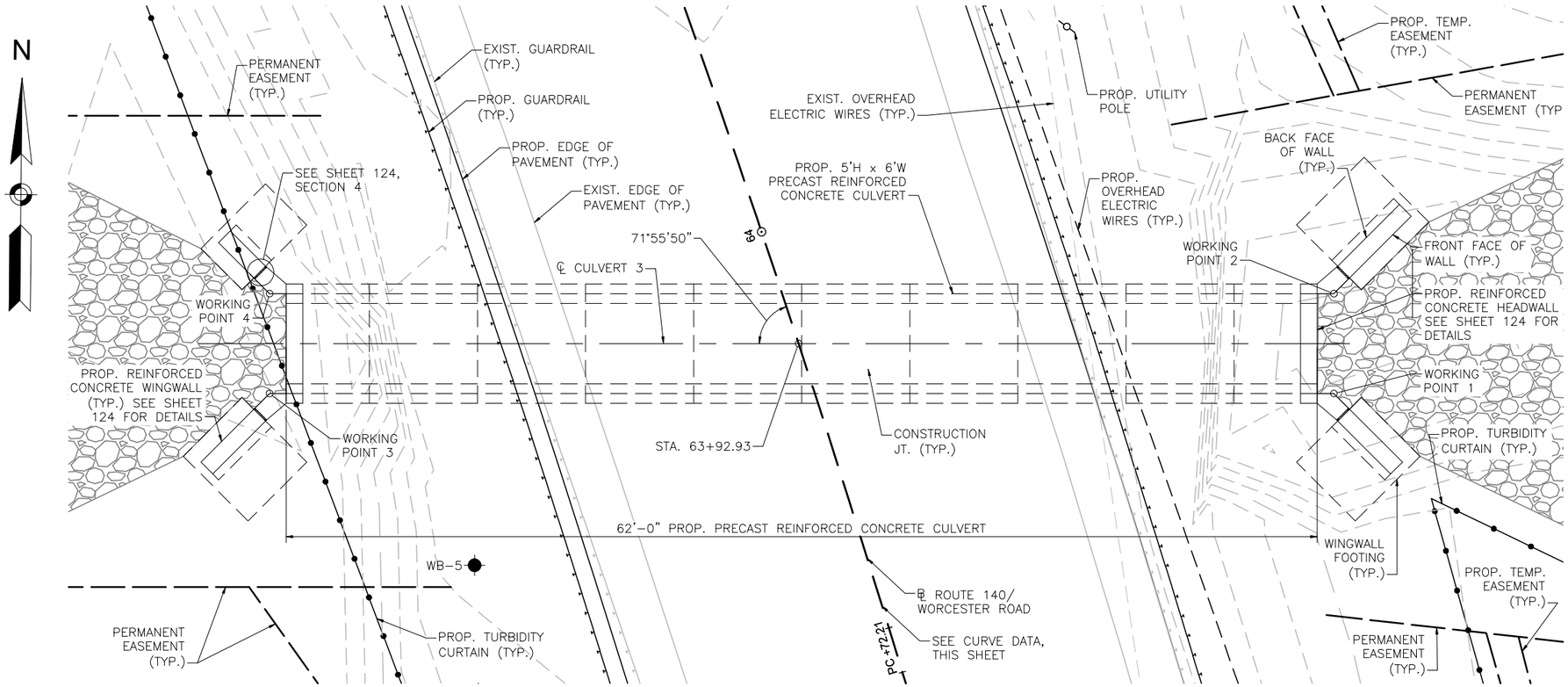

CULVERT NO. 3 PLAN

SCALE: $\frac{1}{8}$" = 1'-0"

WORKING PT.	STA.	OFFSET, FT	NORTHING	EASTING
1	63+80.43	29.74 RT	3014410.67	550699.44
2	63+85.98	31.55 RT	3014416.67	550699.38
3	64+00.20	31.14 LT	3014410.04	550635.44
4	64+06.06	29.21 LT	3014416.04	550635.38

CURVE DATA:
Δ=9°00'14"
R=1000.00'
L=157.15'
T=78.74'

HYDRAULIC DESIGN DATA

DRAINAGE AREA:	1.37 SQUARE MILES
DESIGN FLOOD DISCHARGE:	171 CUBIC FEET PER SECOND
DESIGN FLOOD FREQUENCY:	2% (50 YEARS)
DESIGN FLOOD VELOCITY:	10.63 FEET PER SECOND
DESIGN FLOOD ELEVATION:	901.78 FEET, NAVD 88

BASE (100-YEAR) FLOOD DATA

BASE FLOOD DISCHARGE:	207 CUBIC FEET PER SECOND
BASE FLOOD ELEVATION:	902.50 FEET, NAVD 88

DESIGN AND CHECK SCOUR DATA

DESIGN SCOUR FLOOD ANNUAL CHANCE (RETURN FREQUENCY):	1% (100 YEARS)
DESIGN FLOOD ABUTMENT SCOUR DEPTH:	N/A
DESIGN FLOOD PIER SCOUR DEPTH:	N/A
CHECK SCOUR FLOOD EVENT ANNUAL CHANCE (RETURN FREQUENCY):	0.5% (200 YEARS)
CHECK FLOOD ABUTMENT SCOUR DEPTH:	N/A
CHECK FLOOD PIER SCOUR DEPTH:	N/A

FLOOD OF RECORD

DISCHARGE:	N/A
FREQUENCY:	N/A
MAXIMUM ELEVATION:	N/A
DATE:	N/A
HISTORY OF ICE FLOES:	N/A
EVIDENCE OF SCOUR OR EROSION:	N/A

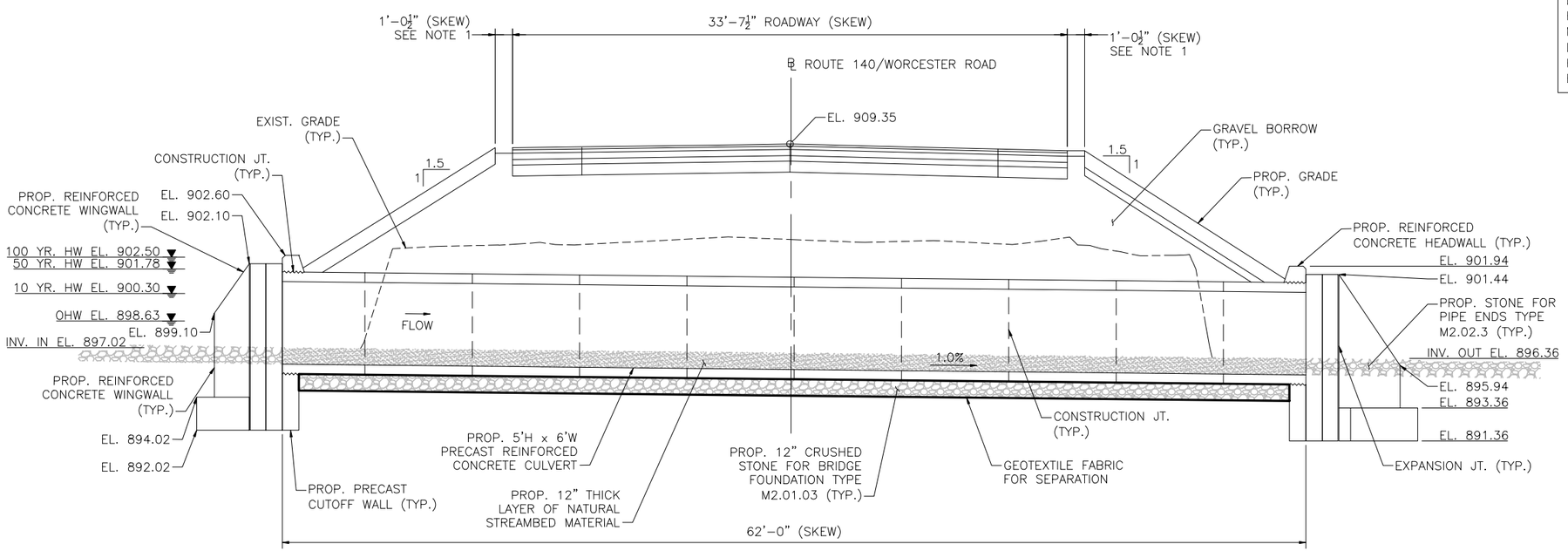

LONGITUDINAL SECTION – STA. 63+95 CULVERT (LOOKING UPSTATION)

SCALE: $\frac{1}{8}$" = 1'-0"

NOTES:

1. PROPOSED GUARDRAIL NOT SHOWN IN CULVERT SECTION FOR CLARITY.
2. SEE SHEET 8 FOR TYPICAL APPROACH SECTION, AND SEE SHEET 189 FOR ROADWAY CROSS SECTIONS AT THE CULVERT NO. 3 LOCATION.
3. PRECAST REINFORCED CONCRETE CULVERT CONSTRUCTION JOINT SPACING WILL VARY PER PRECASTER UP TO 7'-0" MAX. SPACING.
4. THE OBSERVED WATER ELEVATION SHOWN IN THE "CULVERT 3 – WEST HEADWALL/WINGWALLS ELEVATION" DETAIL AT THE UPSTREAM END OF THE PROPOSED CULVERT IS EL. 897.00 (06/2018).
5. IF INSTALLATION OF THE CULVERT OCCURS PRIOR TO THE PROPOSED ROADWAY WORK, THEN THE CONTRACTOR SHALL BE RESPONSIBLE FOR RESTORING THE ROADWAY AND GUARDRAIL OVER THE LIMITS OF THE CULVERT AND MATCHING INTO THE APPROACHES TO FACILITATE RE-OPENING OF THE ROADWAY TO TWO WAY TRAFFIC AT THE END OF THE SHORT DURATION CLOSURE. FOR THESE LIMITS, THE RESTORED PAVEMENT CAN BE A 2" HMA LIFT OVER GRAVEL BORROW BACKFILL MATERIAL.

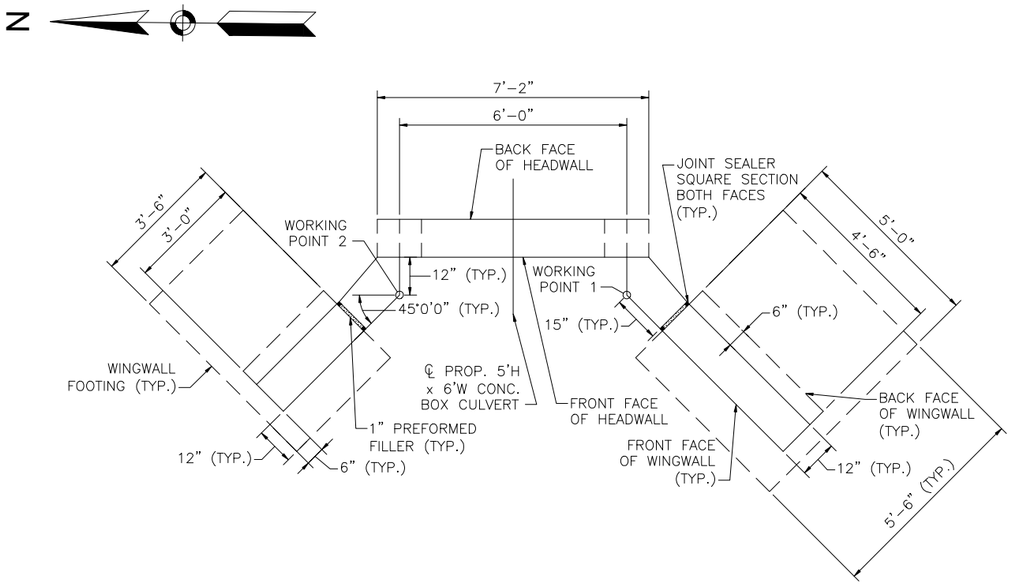

CULVERT 3 – WEST HEADWALL/WINGWALLS PLAN

SCALE: $\frac{1}{4}$" = 1'-0"

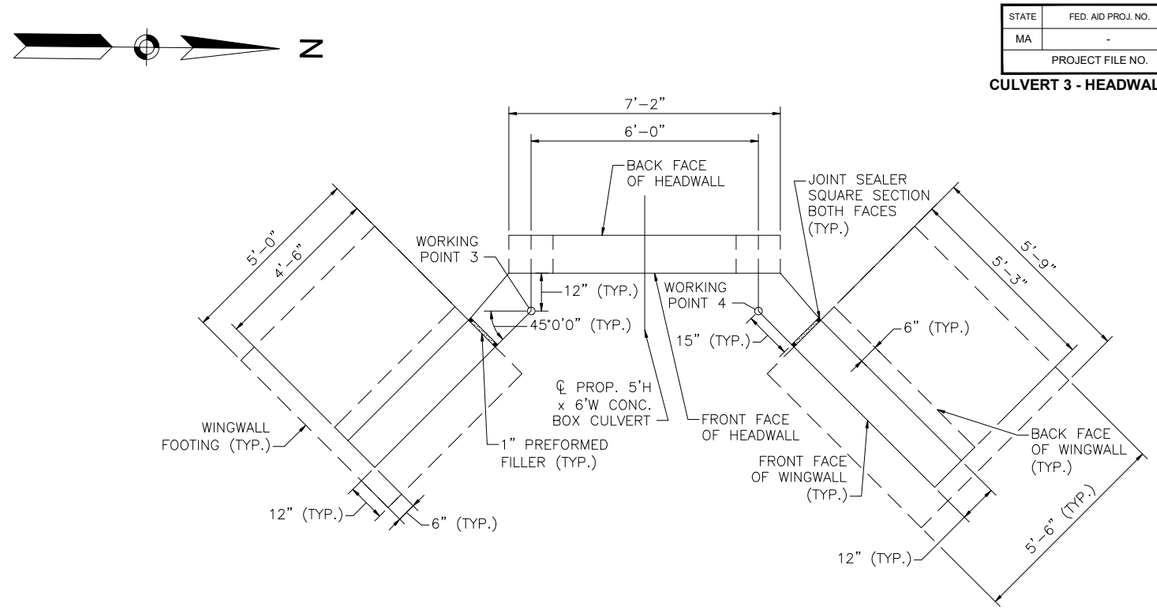

CULVERT 3 – EAST HEADWALL/WINGWALLS PLAN

SCALE: $\frac{1}{4}$" = 1'-0"

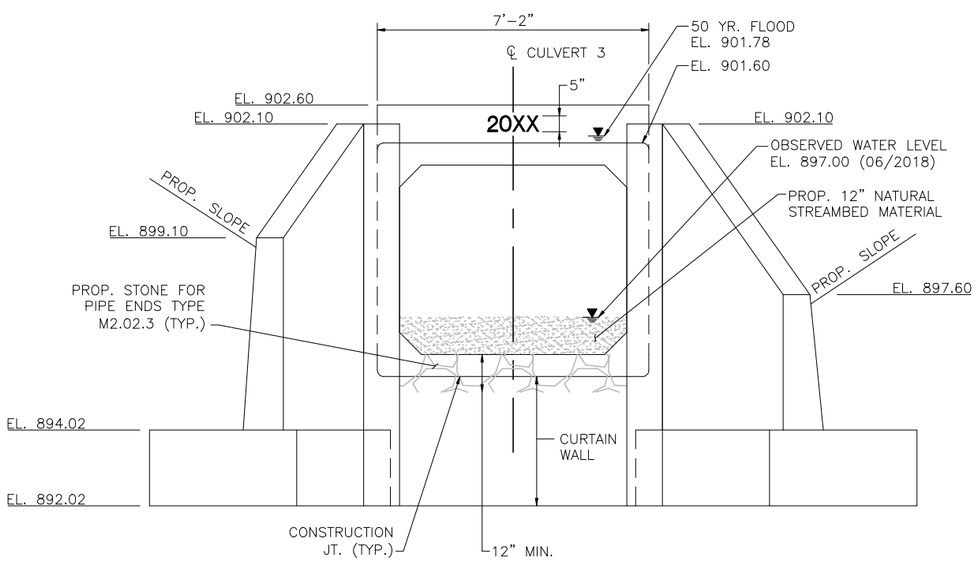

CULVERT 3 – WEST HEADWALL/WINGWALLS ELEVATION

SCALE: $\frac{1}{4}$" = 1'-0"

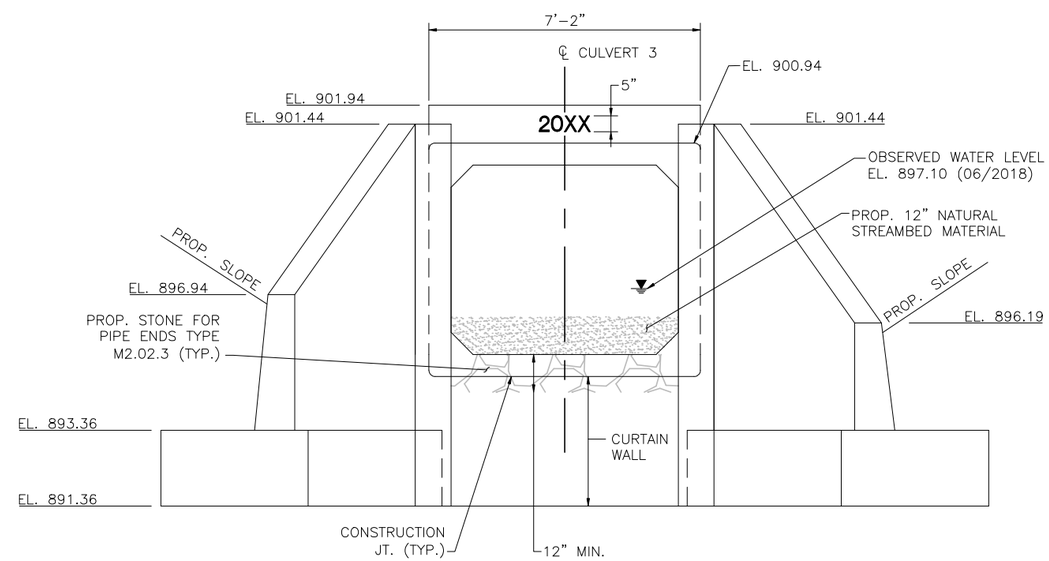

CULVERT 3 – EAST HEADWALL/WINGWALLS ELEVATION

SCALE: $\frac{1}{4}$" = 1'-0"

NOTES:

1. SEE SHEET 121 FOR GENERAL PLAN AND LONGITUDINAL SECTION OF STRUCTURE.
2. SEE SHEET 124 FOR HEADWALL/WINGWALL REINFORCEMENT DETAILS.

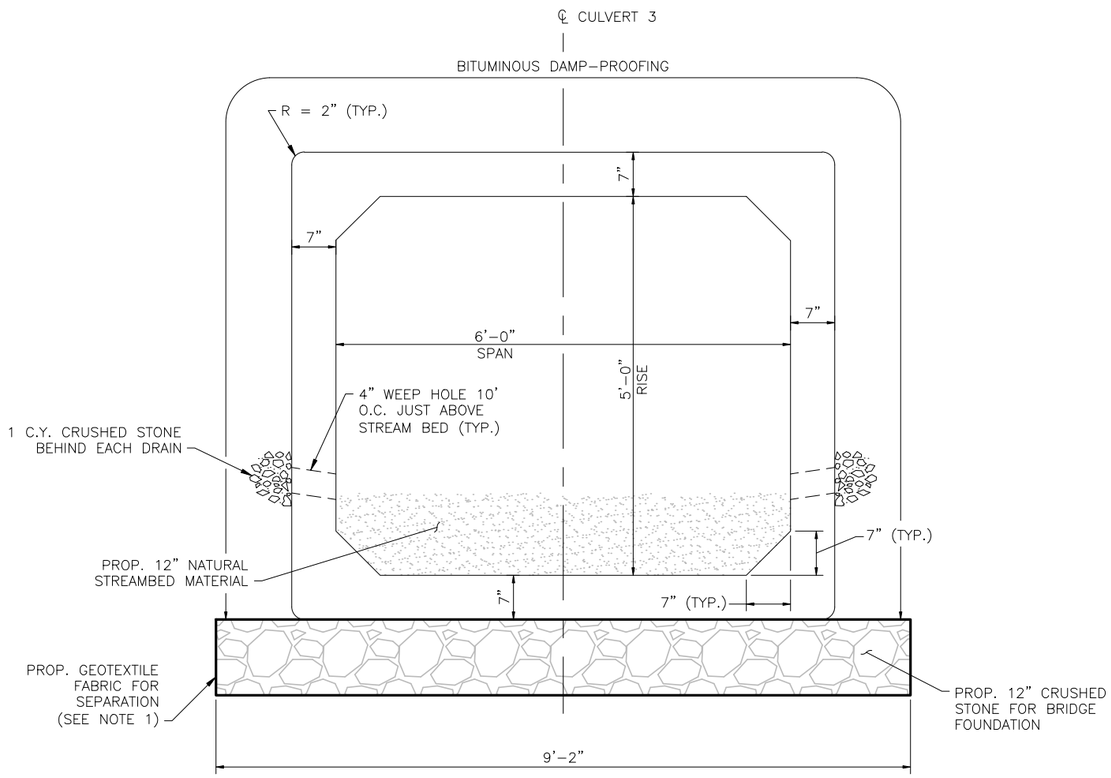

CULVERT 3 – BOX CULVERT TYPICAL SECTION

SCALE: 1" = 2'-0"

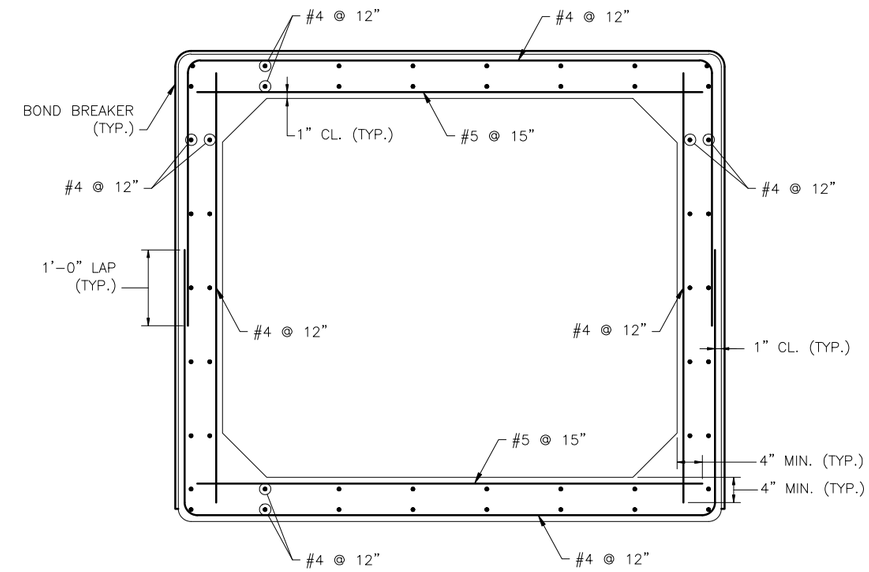

CULVERT 3 – BOX CULVERT REINFORCING DETAILS

SCALE: 1" = 2'-0"

NOTES:

1. PROPOSED GEOTEXTILE FABRIC TO ENVELOP LIMITS OF 12" CRUSHED STONE FOR BRIDGE FOUNDATION WITH MINIMUM 2'-0" OVERLAP AT SEAM.
2. BOX CULVERT TO BE 5000 PSI, $\frac{3}{4}$ IN, 685 HP CEMENT CONCRETE.
3. THE MAXIMUM FACTORED BEARING PRESSURE = 2.54 KSF AS PER AASHTO LRFD BRIDGE DESIGN SPECIFICATIONS STRENGTH I LOAD COMBINATION. FACTORED BEARING RESISTANCE = 9.17 KSF. FACTORED BEARING RESISTANCE IS THE PRODUCT OF THE NOMINAL BEARING RESISTANCE AND A RESISTANCE FACTOR OF 0.45.
4. TRANSVERSE REINFORCING SHALL BE PLACED NORMAL TO THE ℄ OF THE CULVERT.
5. SEE SHEET 117 FOR BOX CULVERT CONSTRUCTION JOINT DETAILS.

STATE	FED. AID PROJ. NO.	SHEET NO.	TOTAL SHEETS
MA	-	124	215
PROJECT FILE NO.	607432		

HEADWALL & MISCELLANEOUS DETAILS

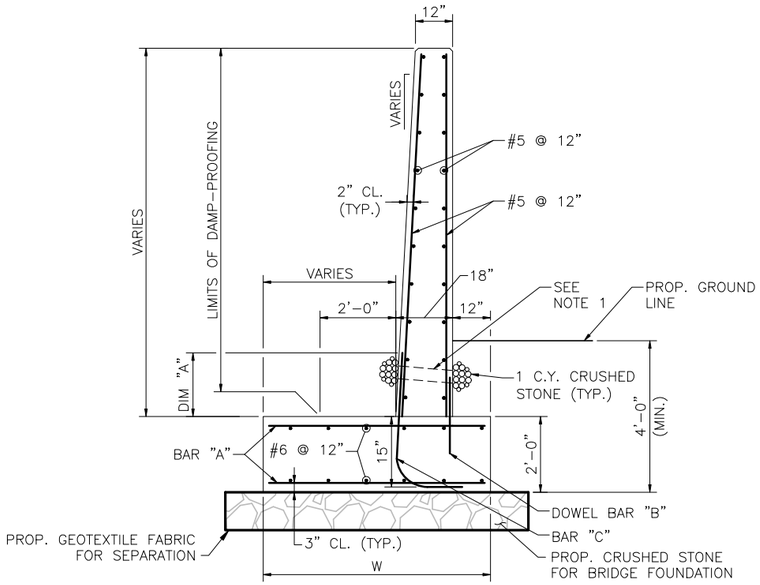

NOTES:

1. 4"ø WEEP HOLES 10'-0" O.C. (JUST ABOVE PROTECTIVE COURSE). PROVIDE 1 CUBIC YARD OF CRUSHED STONE AT EACH END OF WEEP HOLE.
2. ALL CONCRETE SHALL BE 4000 PSI, $1\frac{1}{2}$ IN, 565 CEMENT CONCRETE.
3. SEE TABLES BELOW FOR FACTORED BEARING PRESSURES AND FACTORED BEARING RESISTANCES FOR ALL WALL TYPES. FACTORED BEARING RESISTANCE IS THE PRODUCT OF THE NOMINAL BEARING RESISTANCE AND A RESISTANCE FACTOR OF 0.55.

TYPICAL WINGWALL SECTION

SCALE: $\frac{1}{4}$" = 1'-0"

WINGWALL DIMENSIONS AND REINFORCEMENT SUMMARY							
WALL LOCATION	W	HEEL	BAR "A"	BAR "B"	BAR "B" LENGTH	BAR "C"	DIM "A"
CULVERT 1	5'-6"	3'-0"	#5 @ 12"	#5 @ 12"	2'-0"	#5 @ 12"	19"
CULVERT 2	5'-6"	3'-0"	#6 @ 12"	#6 @ 12"	2'-6"	#6 @ 12"	23"
CULVERT 3	5'-6"	3'-0"	#5 @ 12"	#5 @ 12"	2'-0"	#5 @ 12"	19"

SUMMARY WINGWALL OF BEARING CAPACITIES		
WALL LOCATION	MAXIMUM FACTORED BEARING PRESSURE (KSF)	FACTORED BEARING RESISTANCE (KSF)
CULVERT 1	2.89	8.15
CULVERT 2	2.83	13.66
CULVERT 3	2.83	13.19

NOTE:

THE TABLE ABOVE SUMMARIZES THE FACTORED BEARING PRESSURES AND FACTORED BEARING RESISTANCES FOR AASHTO LRFD BRIDGE DESIGN SPECIFICATIONS STRENGTH I LOAD COMBINATION. FACTORED BEARING RESISTANCE IS A PRODUCT OF THE NOMINAL BEARING RESISTANCE AND A RESISTANCE FACTOR OF 0.55 FOR ALL THREE LOCATIONS.

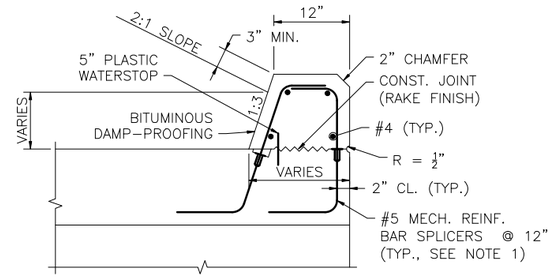

NOTES:

1. THE CONTRACTOR MAY SUBSTITUTE #5 ∫∫ DOWELS, FOR MECHANICAL REINFORCING BAR SPLICERS AND THREADED REBARS.
2. CULVERT REINFORCEMENT IS NOT SHOWN FOR CLARITY.

CULVERT HEADWALL DETAIL

SCALE: 1" = 2'-0"

HEADWALL SUMMARY		
WALL LOCATION	HEIGHT	WIDTH AT BASE
CULVERT 1 – S.	3'-0"	2'-0"
CULVERT 1 – N.	2'-0"	1'-8"
CULVERT 2 – S.	1'-0"	1'-4"
CULVERT 2 – N.	1'-0"	1'-4"
CULVERT 3 – W.	1'-0"	1'-4"
CULVERT 3 – E.	1'-0"	1'-4"

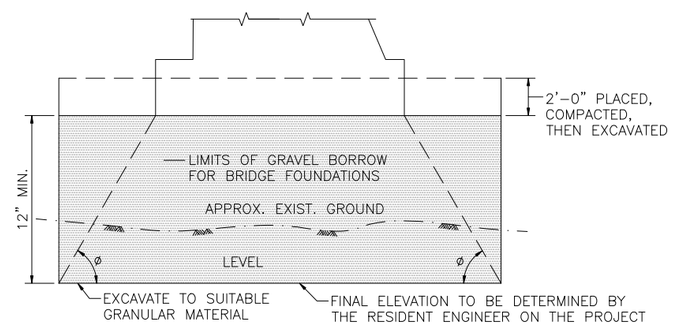

NOTES:

1. ø = 45° FOR DEPTH OF 5'-0" OR LESS.
   ø = 60° FOR DEPTH OVER 5'-0".
2. SAME TREATMENT IS TO BE USED AT ENDS OF WALLS.

LIMITS OF CRUSHED STONE FOR BRIDGE FOUNDATIONS

NOT TO SCALE

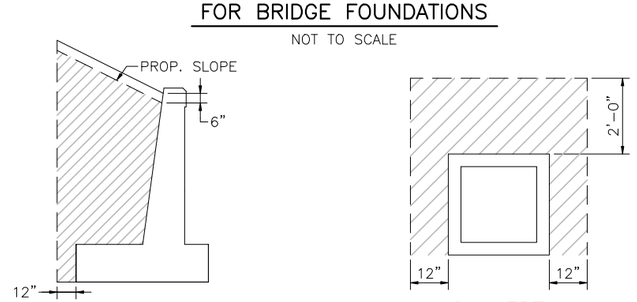

WINGWALL

CULVERT

NOTE:

HATCHED AREA INDICATES LIMITS OF GRAVEL BORROW FOR BACKFILLING STRUCTURES AND PIPES.

LIMITS OF GRAVEL BORROW FOR BACKFILLING STRUCTURES AND PIPES

NOT TO SCALE

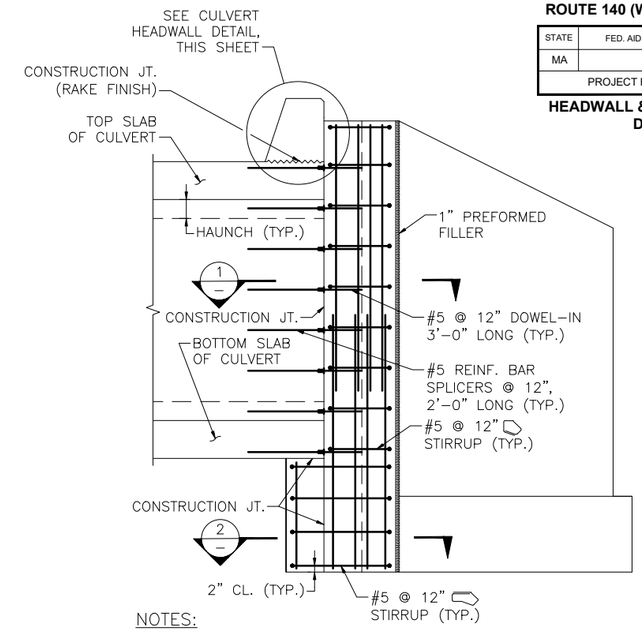

NOTES:

1. THE CONTRACTOR MAY SUBSTITUTE #5 DOWELS, 3'-0" LONG FOR MECHANICAL REINFORCING BAR SPLICERS AND THREADED REBARS.
2. CULVERT REINFORCEMENT IS NOT SHOWN FOR CLARITY.

SECTION AT WINGWALL

SCALE: $\frac{1}{4}$" = 1'-0"

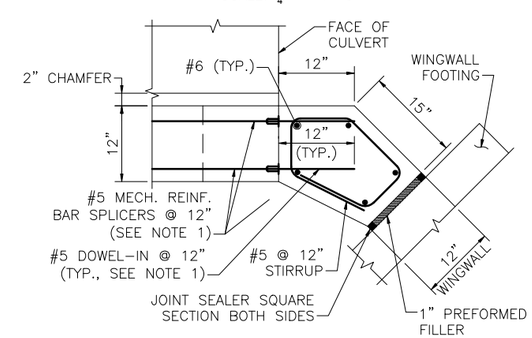

SECTION 1

SCALE: 1" = 2'-0"

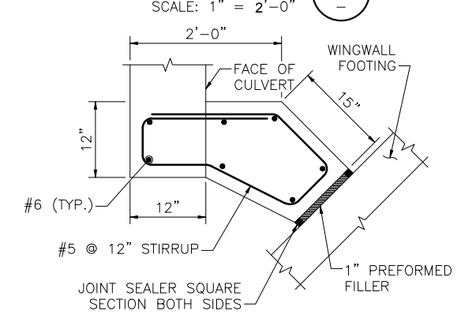

SECTION 2

SCALE: 1" = 2'-0"