US Army Corps
of Engineers®
New England District

FAIRFIELD AND NEW HAVEN COUNTIES, CT COASTAL STORM RISK MANAGEMENT FEASIBILITY STUDY

DRAFT APPENDIX D2: STRUCTURAL DESIGN

December 2019

PREPARED BY:

DEPARTMENT OF ARMY
NEW ENGLAND DISTRICT, CORPS OF ENGINEERS
GEOTECHNICAL ENGINEERING SECTION
CONCORD, MASSACHUSETTS 01742

INTRODUCTION

The New Haven County, CT study area is highly vulnerable to damages resulting from coastal storm events such as Hurricanes and Nor'easters. Hurricane Sandy (2012) is the most recent major event to cause wide spread damage to the region. The USACE North Atlantic Coast Comprehensive Study (completed in 2015) identified areas of high exposure and risk along the Connecticut coast study including New Haven County. Low lying coastal communities contain thousands of high-value residential structures, commercial properties and government facilities. Critical infrastructure throughout the region including the I-95 corridor and multiple railroad transportation systems, government facilities, and medical facilities become more at risk of damage from coastal storm events as climate changes.

This purpose of this general study was to determine the feasibility of a number of flood protection structures and alignments along the coast near Long Wharf adjacent to I-95.

DESIGN SUMMARY

According to Geotechnical Investigation and selected flood protection structures for this study, T-walls and closure structures will be utilized (see Geotechnical Design Appendix). This structural study contains only preliminary design calculations for T-walls and closure structures in 2 foot increments. Both T-Walls and closure structures includes sheet pile seepage cutoff walls and reinforced footing supporting by concrete filled friction pipe piles.

Some of the critical aspects of design include:

- Preliminary estimates of hydraulic data including wave forces at different wall height.
- Preliminary estimates of geotechnical data including pile type and capacity.

DESIGN CRITERIA

The various wall sections should meet the analysis and design requirements for stability outlines in Chapter 4 of EM 1110-2-2502 "Retaining and Flood Walls".

PRELIMINARY DESIGN

For both T-Walls and closure structures, only pile layouts were considered and designed in order to obtain the number of piles and their lengths. For the T-walls, the dimensions of the concrete stems and footings were reasonably assumed based upon common practice. And for the closure structures, the steel retaining configurations and components were assumed to be similar to ones from previous projects.

4FT - 6FT WALL

Consider 1 ft strip wall

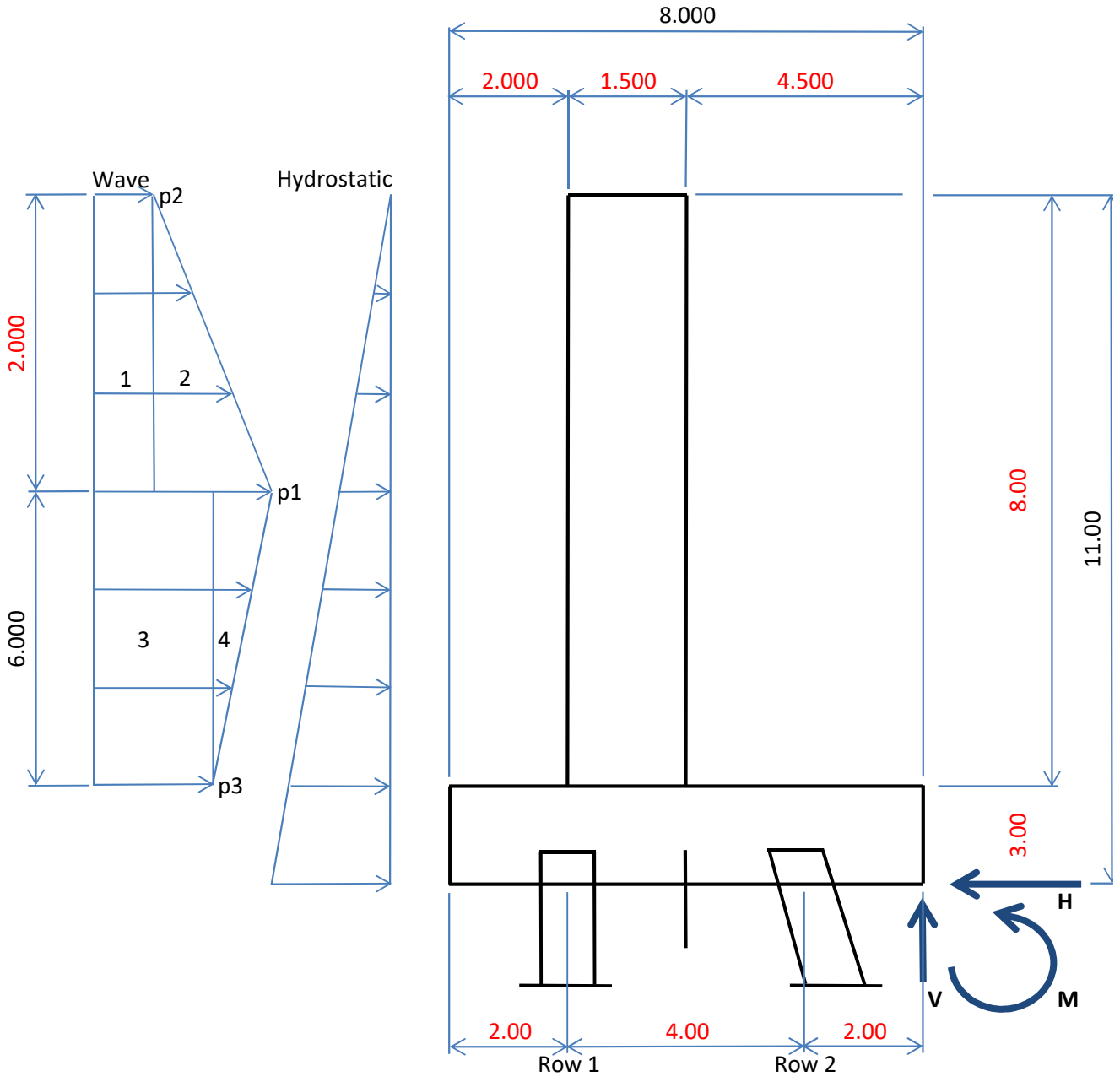

PILE FORCES FOR SERVICE STAGES

Concrete Density =	0.150	Kcf
Salt Water Density =	0.064	Kcf
Wave Load on Wall - Top (p2) =	0.150	Ksf
Wave Load on Wall - Mid (p1) =	0.250	Ksf
Wave Load on Wall - Bot (p3) =	0.200	Kcf

LC	Load Description	LF	L_V	V	M_V	L_H	H	M_H
		---	ft	Kip	Kip.ft	ft	Kip	Kip.ft
	Stem Weight	1.000	5.250	1.800	9.450			
V	Footing Weight	1.000	4.000	3.600	14.400			
	Subtotal	---	---	5.400	23.850			
H	Hydrostatic Pressure	1.000				3.667	3.878	14.220
H	Wave Pressure (1)	1.000				7.000	0.300	2.100
H	Wave Pressure (2)	1.000				6.667	0.100	0.667
H	Wave Pressure (3)	1.000				3.000	1.200	3.600
H	Wave Pressure (4)	1.000				4.000	0.150	0.600
Load Comb - SERVICE IV				5.400	23.850		5.628	21.186

Resultant Forces at Neutral Axis:

V =	5.400	kips
H =	5.628	kips
M =	18.936	kips

Row 1 Pile Spacing =	**6.000**	ft			
Row 1 Pile Area pet LF - A_1 =	0.167	Piles	d_1 =	2.000	ft
Row 2 Pile Spacing =	**6.000**	ft			
Row 2 Pile Area pet LF - A_2 =	0.167	Piles	d_2 =	-2.000	ft
Dist. From NA to Toe -D =	4.000	ft			
Total Pile Area pet LF - A =	0.333	Piles			
Moment of Inertia $\Sigma A_i d_i^2$ - I =	1.333	Pile*ft^2			

Row 1 Axial Pile Load - P1 =	12.204	kips per Pile	(+ Tension)
Row 1 Axial Pile Load - P2 =	-44.604	kips per Pile	(- Compression)
Shear on Pile Head =	16.884	kips per Pile	

New Haven Coastal Study
Flood Wall - Type 2

Prepared by: TPN
Checked by: JHK

Date: 08/02/19
Date: 10/29/19

6FT - 8FT WALL

Consider 1 ft strip wall

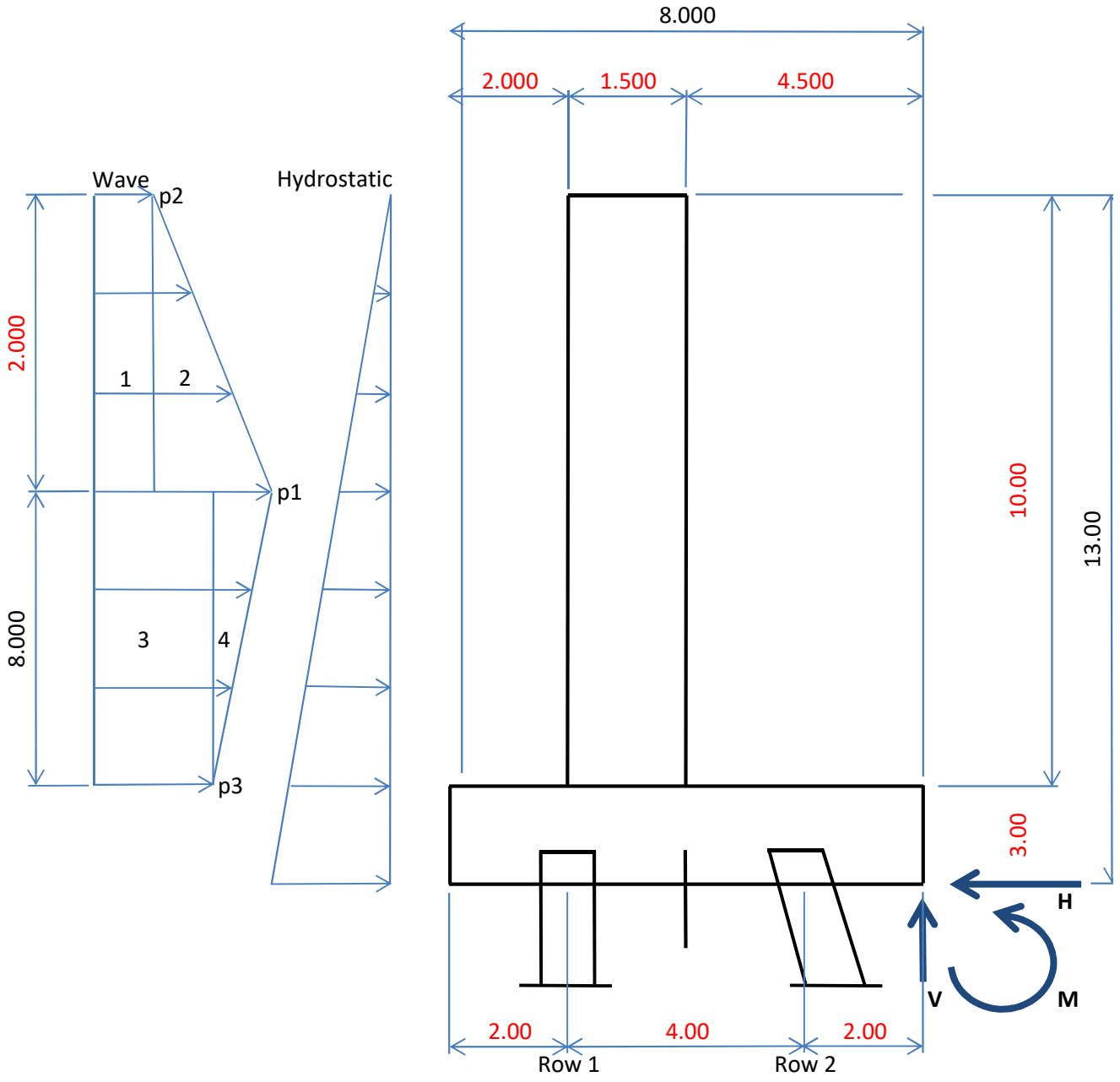

PILE FORCES FOR SERVICE STAGES

Concrete Density =	0.150	Kcf
Salt Water Density =	0.064	Kcf
Wave Load on Wall - Top (p2) =	0.250	Ksf
Wave Load on Wall - Mid (p1) =	0.350	Ksf
Wave Load on Wall - Bot (p3) =	0.300	Kcf

LC	Load Description	LF ---	L_V ft	V Kip	M_V Kip.ft	L_H ft	H Kip	M_H Kip.ft
	Stem Weight	1.000	5.250	2.250	11.813			
V	Footing Weight	1.000	4.000	3.600	14.400			
	Subtotal	---	---	5.850	26.213			
H	Hydrostatic Pressure	1.000				4.333	5.416	23.471
H	Wave Pressure (1)	1.000				9.000	0.500	4.500
H	Wave Pressure (2)	1.000				8.667	0.100	0.867
H	Wave Pressure (3)	1.000				4.000	2.400	9.600
H	Wave Pressure (4)	1.000				5.333	0.200	1.067
Load Comb - SERVICE IV				5.850	26.213		8.616	39.505

Resultant Forces at Neutral Axis:

V =	5.850	kips
H =	8.616	kips
M =	36.692	kips

Row 1 Pile Spacing =	**4.000**	ft			
Row 1 Pile Area pet LF - A_1 =	0.250	Piles	d_1 =	2.000	ft
Row 2 Pile Spacing =	**4.000**	ft			
Row 2 Pile Area pet LF - A_2 =	0.250	Piles	d_2 =	-2.000	ft
Dist. From NA to Toe -D =	4.000	ft			
Total Pile Area pet LF - A =	0.500	Piles			
Moment of Inertia $\Sigma A_i d_i^2$ - I =	2.000	Pile*ft^2			

Row 1 Axial Pile Load - P1 =	24.992	kips per Pile	(+ Tension)
Row 1 Axial Pile Load - P2 =	-48.392	kips per Pile	(- Compression)
Shear on Pile Head =	17.233	kips per Pile	

8FT - 10FT WALL

Consider 1 ft strip wall

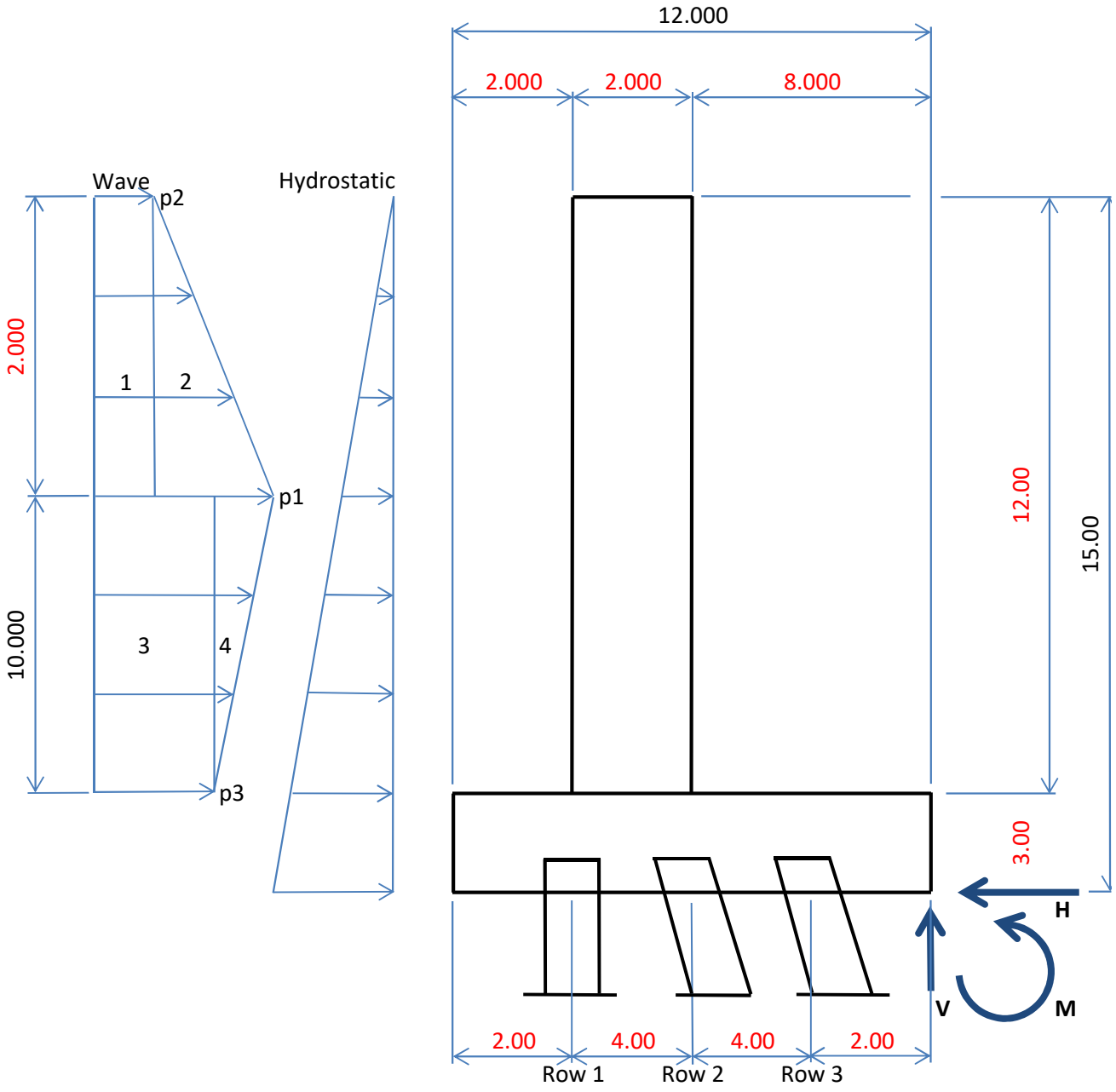

PILE FORCES FOR SERVICE STAGES

Concrete Density =	0.150	Kcf
Salt Water Density =	0.064	Kcf
Wave Load on Wall - Top (p2) =	0.350	Ksf
Wave Load on Wall - Mid (p1) =	0.450	Ksf
Wave Load on Wall - Bot (p3) =	0.400	Kcf

LC	Load Description	LF	L_V	V	M_V	L_H	H	M_H
		---	ft	Kip	Kip.ft	ft	Kip	Kip.ft
	Stem Weight	1.000	9.000	3.600	32.400			
V	Footing Weight	1.000	6.000	5.400	32.400			
	Subtotal	---	---	9.000	64.800			
H	Hydrostatic Pressure	1.000				5.000	7.211	36.056
H	Wave Pressure (1)	1.000				11.000	0.700	7.700
H	Wave Pressure (2)	1.000				10.667	0.100	1.067
H	Wave Pressure (3)	1.000				5.000	4.000	20.000
H	Wave Pressure (4)	1.000				6.667	0.250	1.667
Load Comb - SERVICE IV				9.000	64.800		12.261	66.490

Resultant Forces at Neutral Axis:

V =	9.000	kips
H =	12.261	kips
M =	55.690	kips

Row 1 Pile Spacing =	**4.000**	ft			
Row 1 Pile Area pet LF - A_1 =	0.250	Piles	d_1 =	4.000	ft
Row 2 Pile Spacing =	**4.000**	ft			
Row 2 Pile Area pet LF - A_2 =	0.250	Piles	d_2 =	0.000	ft
Row 3 Pile Spacing =	**4.000**	ft			
Row 2 Pile Area pet LF - A_3 =	0.250	Piles	d_2 =	-4.000	ft
Dist. From NA to Toe -D =	6.000	ft			
Total Pile Area pet LF - A =	0.750	Piles			
Moment of Inertia $\Sigma A_i d_i^2$ - I =	8.000	Pile*ft^2			

Row 1 Axial Pile Load - P1 =	15.845	kips per Pile	(+ Tension)
Row 1 Axial Pile Load - P2 =	-12.000	kips per Pile	(- Compression)
Row 1 Axial Pile Load - P3 =	-39.845	kips per Pile	(- Compression)
Shear on Pile Head =	16.348	kips per Pile	

10FT - 12FT WALL

Consider 1 ft strip wall

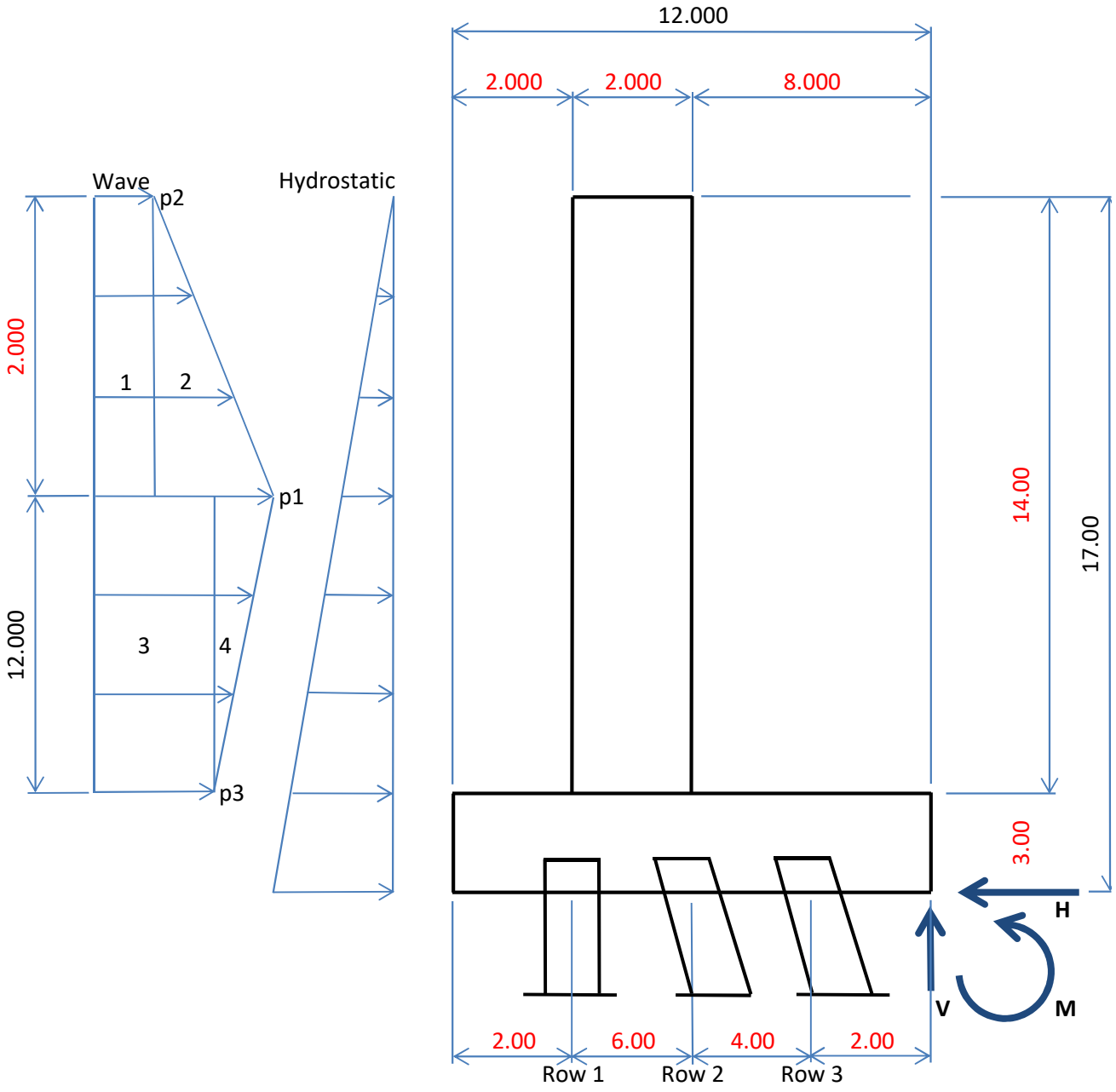

PILE FORCES FOR SERVICE STAGES

Concrete Density =	0.150	Kcf
Salt Water Density =	0.064	Kcf
Wave Load on Wall - Top (p2) =	0.450	Ksf
Wave Load on Wall - Mid (p1) =	0.550	Ksf
Wave Load on Wall - Bot (p3) =	0.500	Kcf

LC	Load Description	LF ---	L_V ft	V Kip	M_V Kip.ft	L_H ft	H Kip	M_H Kip.ft
	Stem Weight	1.000	9.000	4.200	37.800			
V	Footing Weight	1.000	6.000	5.400	32.400			
	Subtotal	---	---	9.600	70.200			
H	Hydrostatic Pressure	1.000				5.667	9.262	52.487
H	Wave Pressure (1)	1.000				13.000	0.900	11.700
H	Wave Pressure (2)	1.000				12.667	0.100	1.267
H	Wave Pressure (3)	1.000				6.000	6.000	36.000
H	Wave Pressure (4)	1.000				8.000	0.300	2.400
Load Comb - SERVICE IV				9.600	70.200		16.562	103.854

Resultant Forces at Neutral Axis:

V =	9.600	kips
H =	16.562	kips
M =	97.654	kips

Row 1 Pile Spacing =	**4.000**	ft			
Row 1 Pile Area pet LF - A_1 =	0.250	Piles	d_1 =	5.333	ft
Row 2 Pile Spacing =	**4.000**	ft			
Row 2 Pile Area pet LF - A_2 =	0.250	Piles	d_2 =	-0.667	ft
Row 3 Pile Spacing =	**4.000**	ft			
Row 2 Pile Area pet LF - A_3 =	0.250	Piles	d_2 =	-4.667	ft
Dist. From NA to Toe -D =	6.667	ft			
Total Pile Area pet LF - A =	0.750	Piles			
Moment of Inertia $\Sigma A_i d_i^2$ - I =	12.667	Pile*ft^2			

Row 1 Axial Pile Load - P1 =	28.317	kips per Pile	(+ Tension)
Row 1 Axial Pile Load - P2 =	-17.940	kips per Pile	(- Compression)
Row 1 Axial Pile Load - P3 =	-48.778	kips per Pile	(- Compression)
Shear on Pile Head =	22.083	kips per Pile	

3FT - 5FT GATE

Consider 1 ft strip wall

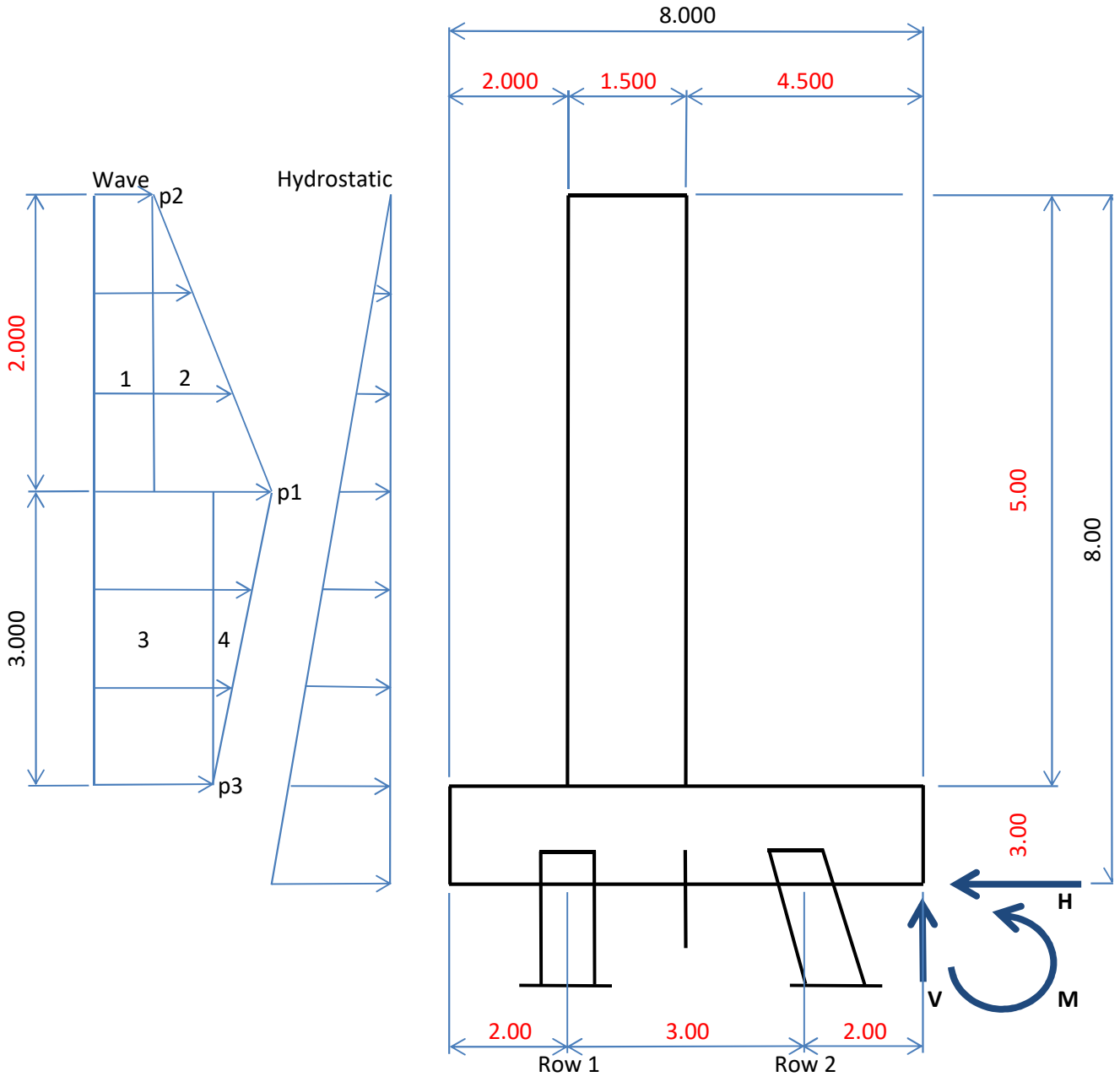

PILE FORCES FOR SERVICE STAGES

Concrete Density =	0.150	Kcf
Salt Water Density =	0.064	Kcf
Wave Load on Wall - Top (p2) =	0.250	Ksf
Wave Load on Wall - Mid (p1) =	0.350	Ksf
Wave Load on Wall - Bot (p3) =	0.300	Kcf

LC	Load Description	LF	L_V	V	M_V	L_H	H	M_H
		---	ft	Kip	Kip.ft	ft	Kip	Kip.ft
	Stem Weight	1.000	5.250	1.125	5.906			
V	Footing Weight	1.000	4.000	3.600	14.400			
	Subtotal	---	---	4.725	20.306			
H	Hydrostatic Pressure	1.000				2.667	2.051	5.470
H	Wave Pressure (1)	1.000				4.000	0.500	2.000
H	Wave Pressure (2)	1.000				3.667	0.100	0.367
H	Wave Pressure (3)	1.000				1.500	0.900	1.350
H	Wave Pressure (4)	1.000				2.000	0.075	0.150
Load Comb - SERVICE IV				4.725	20.306		3.626	9.337

Resultant Forces at Neutral Axis:

V =	4.725	kips
H =	3.626	kips
M =	5.568	kips

Row 1 Pile Spacing =	**6.000**	ft			
Row 1 Pile Area pet LF - A_1 =	0.167	Piles	d_1 =	1.500	ft
Row 2 Pile Spacing =	**6.000**	ft			
Row 2 Pile Area pet LF - A_2 =	0.167	Piles	d_2 =	-1.500	ft
Dist. From NA to Toe -D =	3.500	ft			
Total Pile Area pet LF - A =	0.333	Piles			
Moment of Inertia $\Sigma A_i d_i^2$ - I =	0.750	Pile*ft^2			

Row 1 Axial Pile Load - P1 =	-3.039	kips per Pile	(+ Tension)
Row 1 Axial Pile Load - P2 =	-25.311	kips per Pile	(- Compression)
Shear on Pile Head =	10.879	kips per Pile	

5FT - 7FT GATE

Consider 1 ft strip wall

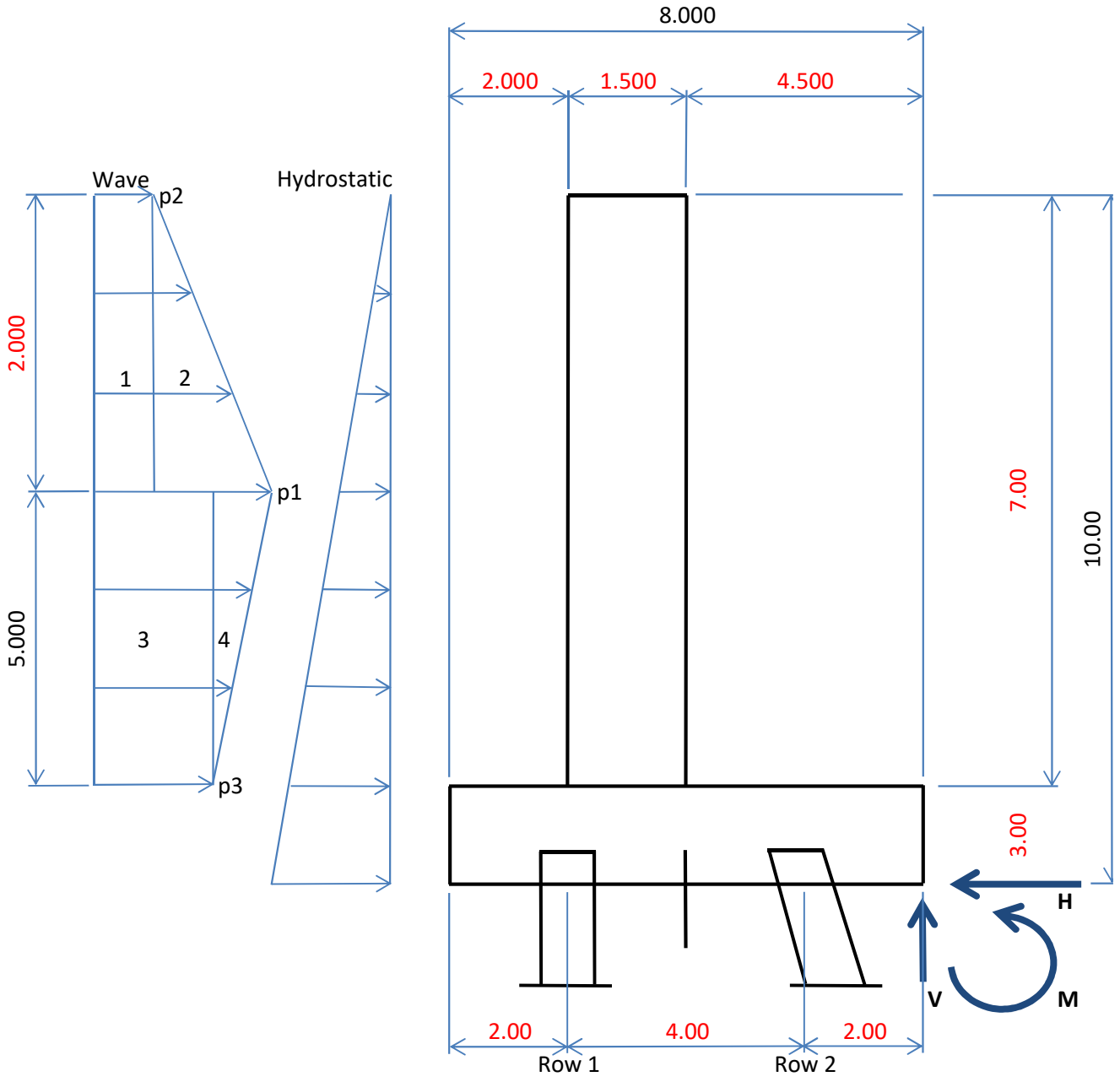

PILE FORCES FOR SERVICE STAGES

Concrete Density =	0.150	Kcf
Salt Water Density =	0.064	Kcf
Wave Load on Wall - Top (p2) =	0.250	Ksf
Wave Load on Wall - Mid (p1) =	0.350	Ksf
Wave Load on Wall - Bot (p3) =	0.300	Kcf

LC	Load Description	LF ---	L_V ft	V Kip	M_V Kip.ft	L_H ft	H Kip	M_H Kip.ft
	Stem Weight	1.000	5.250	1.575	8.269			
V	Footing Weight	1.000	4.000	3.600	14.400			
	Subtotal	---	---	5.175	22.669			
H	Hydrostatic Pressure	1.000				3.333	3.205	10.683
H	Wave Pressure (1)	1.000				6.000	0.500	3.000
H	Wave Pressure (2)	1.000				5.667	0.100	0.567
H	Wave Pressure (3)	1.000				2.500	1.500	3.750
H	Wave Pressure (4)	1.000				3.333	0.125	0.417
Load Comb - SERVICE IV				5.175	22.669		5.430	18.417

Resultant Forces at Neutral Axis:

V =	5.175	kips
H =	5.430	kips
M =	16.448	kips

Row 1 Pile Spacing =	**6.000**	ft			
Row 1 Pile Area pet LF - A_1 =	0.167	Piles	d_1 =	2.000	ft
Row 2 Pile Spacing =	**6.000**	ft			
Row 2 Pile Area pet LF - A_2 =	0.167	Piles	d_2 =	-2.000	ft
Dist. From NA to Toe -D =	4.000	ft			
Total Pile Area pet LF - A =	0.333	Piles			
Moment of Inertia $\Sigma A_i d_i^2$ - I =	1.333	Pile*ft^2			

Row 1 Axial Pile Load - P1 =	9.147	kips per Pile	(+ Tension)
Row 1 Axial Pile Load - P2 =	-40.197	kips per Pile	(- Compression)
Shear on Pile Head =	6.241	kips per Pile	

7FT -9FT GATE

Consider 1 ft strip wall

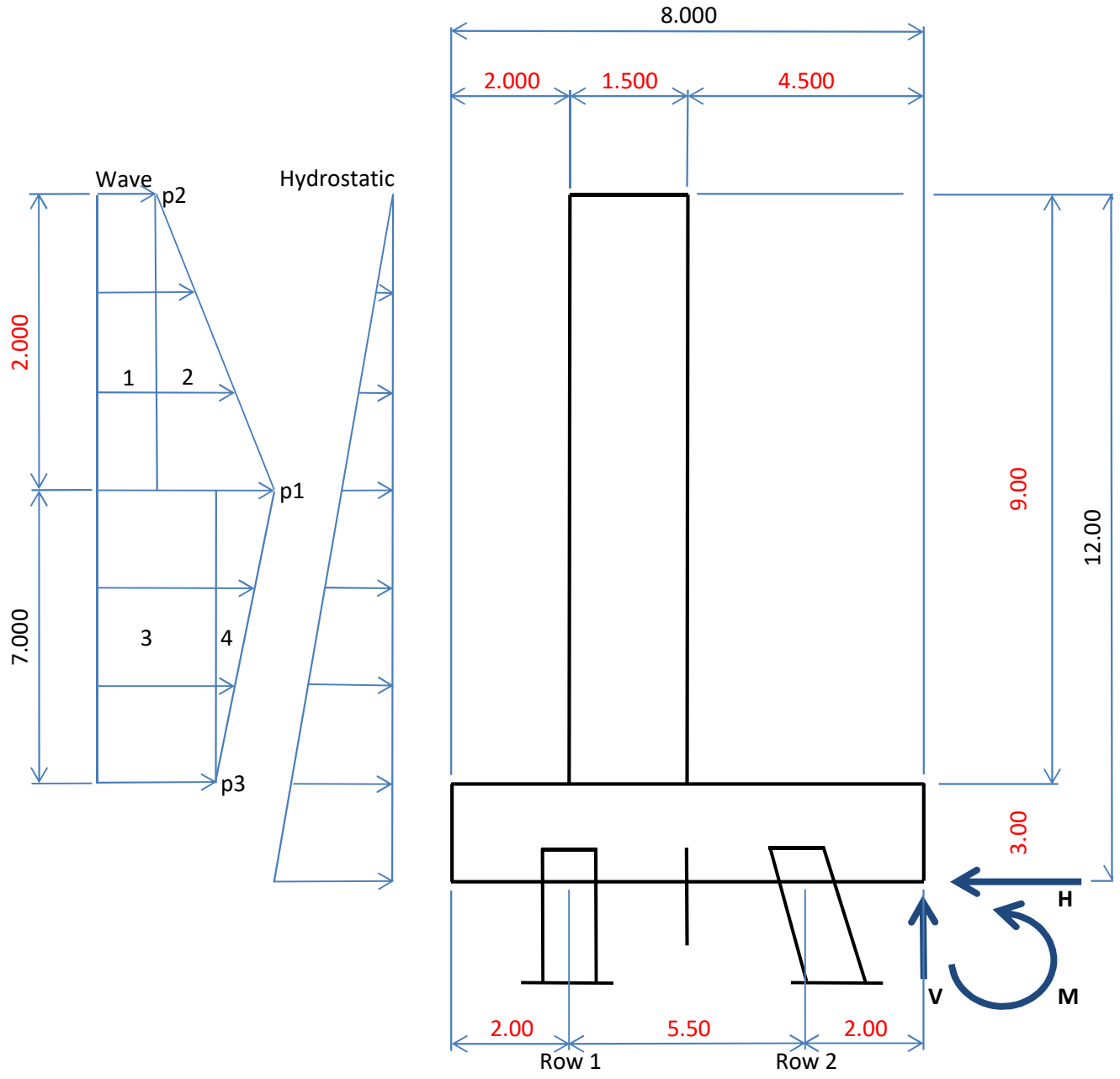

PILE FORCES FOR SERVICE STAGES

Concrete Density =	0.150	Kcf
Salt Water Density =	0.064	Kcf
Wave Load on Wall - Top (p2) =	0.250	Ksf
Wave Load on Wall - Mid (p1) =	0.350	Ksf
Wave Load on Wall - Bot (p3) =	0.300	Kcf

LC	Load Description	LF ---	L_V ft	V Kip	M_V Kip.ft	L_H ft	H Kip	M_H Kip.ft
	Stem Weight	1.000	5.250	2.025	10.631			
V	Footing Weight	1.000	4.000	3.600	14.400			
	Subtotal	---	---	5.625	25.031			
H	Hydrostatic Pressure	1.000				4.000	4.615	18.461
H	Wave Pressure (1)	1.000				8.000	0.500	4.000
H	Wave Pressure (2)	1.000				7.667	0.100	0.767
H	Wave Pressure (3)	1.000				3.500	2.100	7.350
H	Wave Pressure (4)	1.000				4.667	0.175	0.817
Load Comb - SERVICE IV				5.625	25.031		7.490	31.394

Resultant Forces at Neutral Axis:

V =	5.625	kips
H =	7.490	kips
M =	33.082	kips

Row 1 Pile Spacing =	**5.000**	ft			
Row 1 Pile Area pet LF - A_1 =	0.200	Piles	d_1 =	2.750	ft
Row 2 Pile Spacing =	**5.000**	ft			
Row 2 Pile Area pet LF - A_2 =	0.200	Piles	d_2 =	-2.750	ft
Dist. From NA to Toe -D =	4.750	ft			
Total Pile Area pet LF - A =	0.400	Piles			
Moment of Inertia $\Sigma A_i d_i^2$ - I =	3.025	Pile*ft^2			

Row 1 Axial Pile Load - P1 =	16.012	kips per Pile	(+ Tension)
Row 1 Axial Pile Load - P2 =	-44.137	kips per Pile	(- Compression)
Shear on Pile Head =	7.691	kips per Pile	

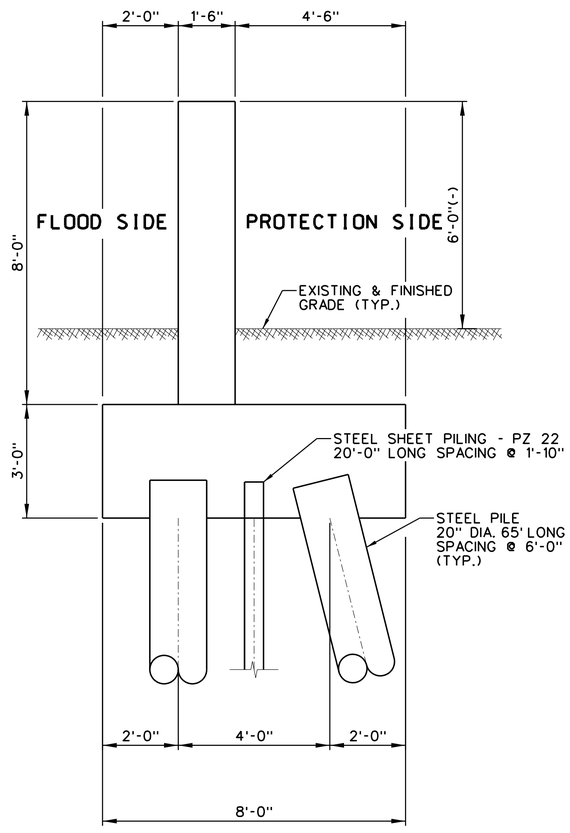

TYPE 1 T-WALL

5'-0" - 6'-0"

SCALE: 1/2" = 1'-0"

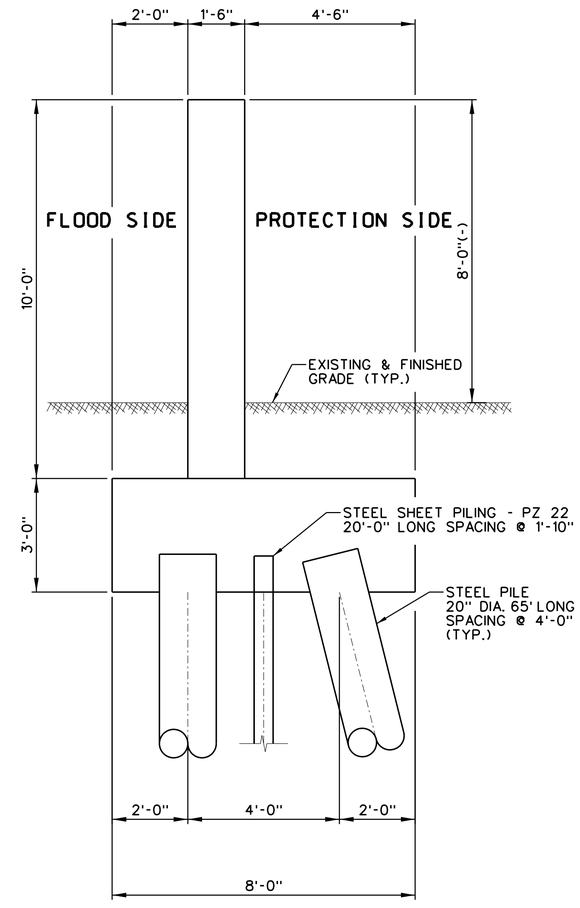

TYPE 2 T-WALL

6'-0" - 8'-0

SCALE: 1/2" = 1'-0"

US Army Corps of Engineers® New England District

MARK	DESCRIPTION	DATE	APPR.	MARK	DESCRIPTION	DATE	APPR.

U. S. ARMY ENGINEER DISTRICT
CORPS OF ENGINEERS
CONCORD, MASSACHUSETTS

DESIGNED BY: TRUVEN NGUYEN | DATE:
DWN BY: TN | CKD BY: | SOLICITATION NO.:
SUBMITTED BY: | CONTRACT NO.:
PLOT SCALE: 1:1 | PLOT DATE: 2015 | DRAWING CODE:
SIZE: ANSI D | FILE NAME: HVN_S-01.dgn

FLOOD PROTECTION
CONNECTICUT COASTAL STUDY

NEW HAVEN & FAIRFIELD, CONNECTICUT
T-WALLS, TYPES 1&2
SECTIONS

SHEET IDENTIFICATION
S-01

SHEET 30 OF 39

PRELIMINARY - NOT FOR CONSTRUCTION

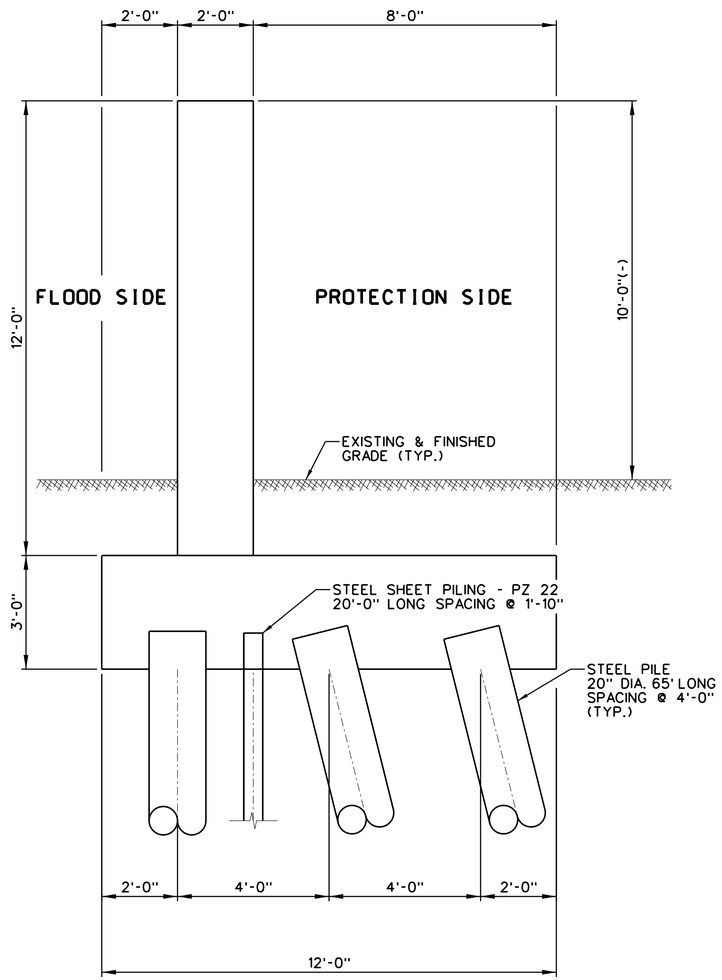

TYPE 3 T-WALL

8'-0" - 10'-0

SCALE: 1/2" = 1'-0"

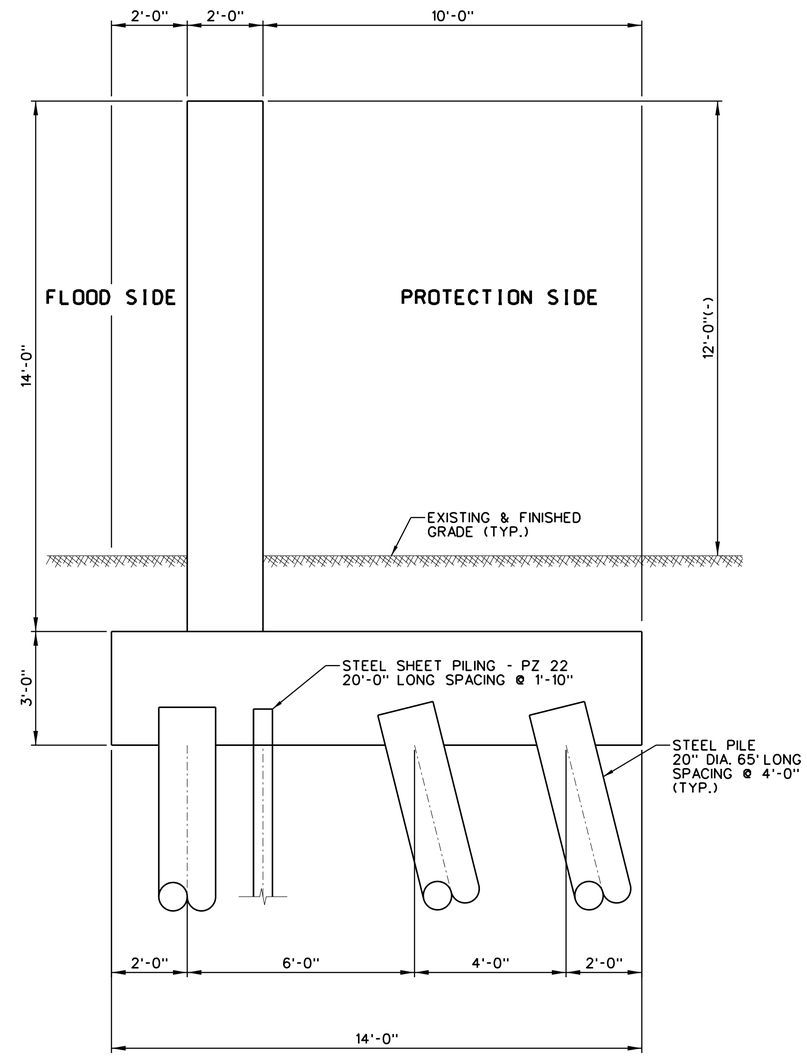

TYPE 4 T-WALL

10'-0" - 12'-0

SCALE: 1/2" = 1'-0"

NOTE:

SEE CIVIL DRAWINGS FOR LOCATION AND HORIZONTAL LIMIT FOR EACH TYPE OF WALLS.

US Army Corps of Engineers® New England District

MARK	DESCRIPTION	DATE	APPR.

MARK	DESCRIPTION	DATE	APPR.

U. S. ARMY ENGINEER DISTRICT
CORPS OF ENGINEERS
CONCORD, MASSACHUSETTS

DESIGNED BY: THUYEN NGUYEN
DWN BY: TN
CKD BY:
SUBMITTED BY:
PLOT SCALE: 1:1
PLOT DATE: 2015
SIZE: ANSI D
FILE NAME: LPD_S-101.dgn
DATE:
SOLICITATION NO.:
CONTRACT NO.:
DRAWING CODE:

FLOOD PROTECTION
CONNECTICUT COASTAL STUDY
NEW HAVEN & FAIRFIELD, CONNECTICUT
T-WALLS - TYPES 3&4
SECTIONS

SHEET IDENTIFICATION
S-02
SHEET 30 OF 39

PRELIMINARY - NOT FOR CONSTRUCTION

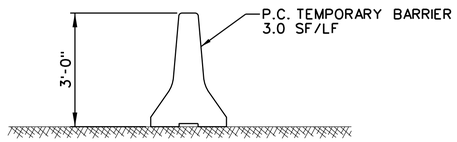

P.C. TEMPORARY BARRIER
3'-0"
SCALE: 1/2" = 1'-0"

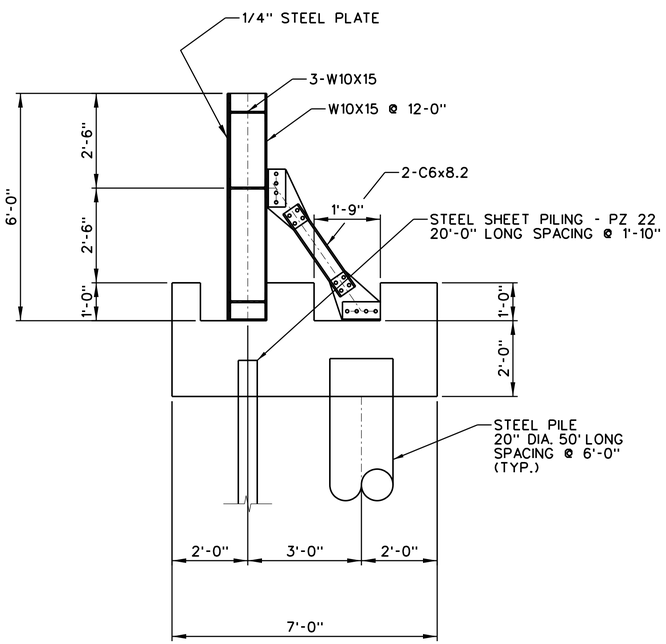

TYPE 1 FLOOD GATE
5'-0"
SCALE: 1/2" = 1'-0"

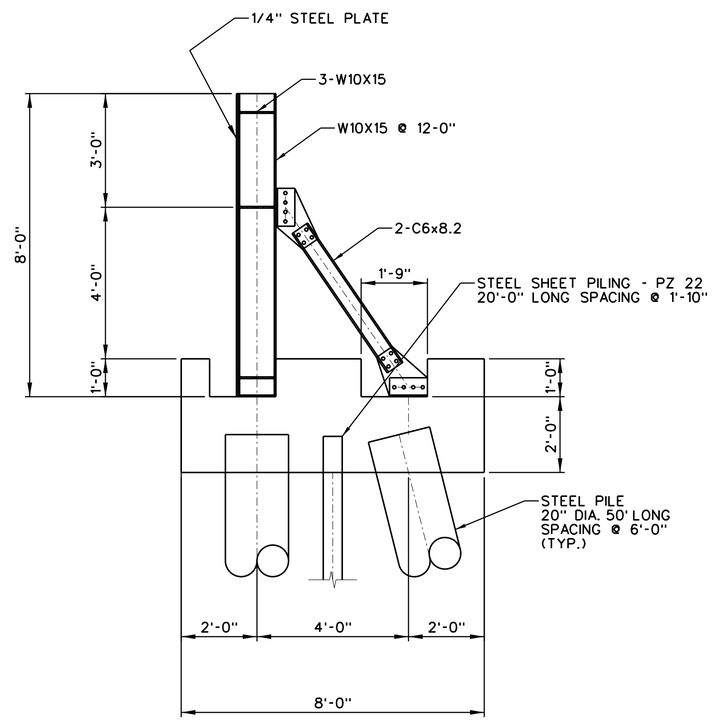

TYPE 2 FLOOD GATE
7'-0"
SCALE: 1/2" = 1'-0"

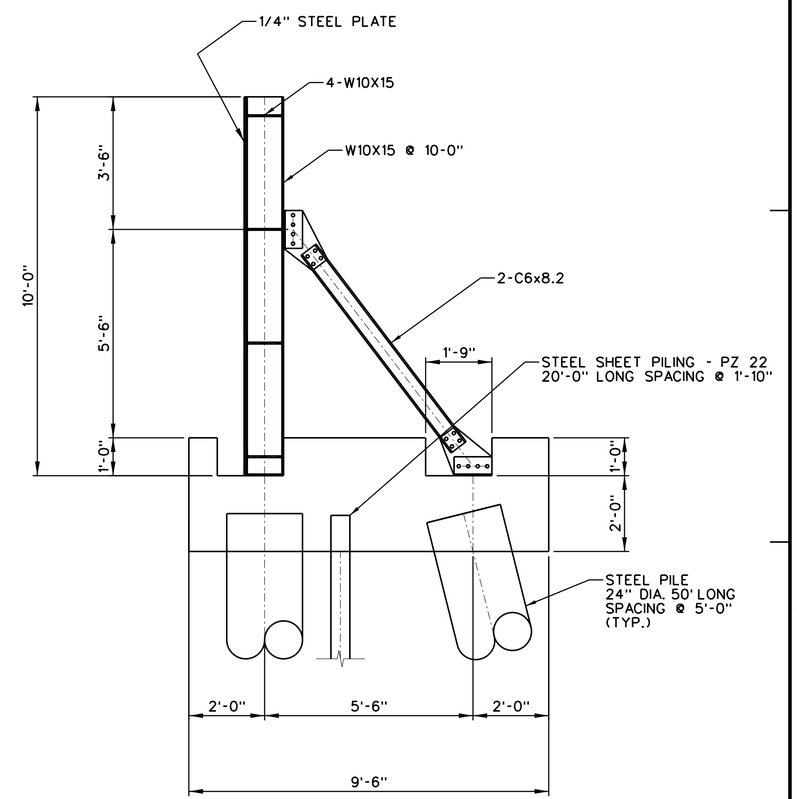

TYPE 3 FLOOD GATE
9'-0"
SCALE: 1/2" = 1'-0"

US Army Corps of Engineers®
New England District

MARK	DESCRIPTION	DATE	APPR.

MARK	DESCRIPTION	DATE	APPR.

U. S. ARMY ENGINEER DISTRICT
CORPS OF ENGINEERS
CONCORD, MASSACHUSETTS

DESIGNED BY: THUYEN NGUYEN
DWN BY: TN
CKD BY:
SUBMITTED BY:
PLOT SCALE: 1:1
PLOT DATE: 2015
SIZE: ANSI D
FILE NAME: LPD_S-101.dgn
DATE:
SOLICITATION NO.:
CONTRACT NO.:
DRAWING CODE:

FLOOD PROTECTION
CONNECTICUT COASTAL STUDY
NEW HAVEN & FAIRFIELD, CONNECTICUT
FLOOD GATES- TYPES 1-3
SECTIONS

SHEET IDENTIFICATION
S-03
SHEET 30 OF 39

PRELIMINARY - NOT FOR CONSTRUCTION