Middletown and Durham, CT

DURHAM MEADOWS WATERLINE RD

EPA CONTRACT NO. EP-S1-06-01

TASK ORDER NO. 0060-RD-RD-01D5

APRIL 2018

100% SUBMITTAL

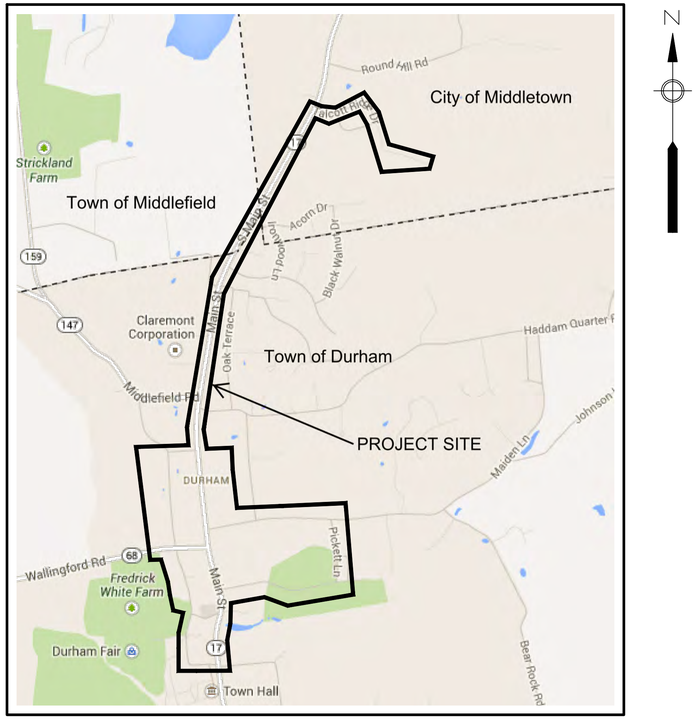

LOCATION PLAN

Scale: 1" = 1000'

0 1000 2000 3000

SCALE 1" = 1000' FEET

INDEX OF DRAWINGS

GENERAL

G-1 TITLE SHEET
G-2 INDEX OF DRAWINGS
G-3 GENERAL NOTES, LEGEND, AND ABBREVIATIONS
G-4 KEY PLAN
G-5 SURVEY CONTROL POINT TIE DIAGRAMS

CIVIL

C-1A EXISTING CONDITIONS PLAN
C-1B EXISTING CONDITIONS & SITE PREPARATION
C-2 SITE, GRADING AND PIPING
C-3 PLAN & PROFILE - TANK ACCESS DRIVEWAY - STA. 10+00 TO STA. 17+20
C-4 PLAN & PROFILE - TANK ACCESS DRIVEWAY - STA. 17+20 TO STA. 30+46
C-5 PLAN - TALCOTT RIDGE DRIVE - STA. 30+46 TO STA. 35+68
C-6 PROFILE - TALCOTT RIDGE DRIVE - STA. 30+46 TO STA. 35+68
C-7 PLAN - TALCOTT RIDGE DRIVE - STA. 35+68 TO STA. 45+97
C-8 PROFILE - TALCOTT RIDGE DRIVE - STA. 35+68 TO STA. 45+97
C-9 PLAN - SOUTH MAIN STREET (ROUTE 17) - STA. 45+97 TO STA. 52+35 & STA. 100+00 TO STA. 104+76
C-10 PROFILE - SOUTH MAIN STREET (ROUTE 17) - STA. 45+97 TO STA. 52+35 & STA. 100+00 TO STA. 104+76
C-11 PLAN - SOUTH MAIN STREET (ROUTE 17) - STA. 104+76 TO STA. 125+50
C-12 PROFILE - SOUTH MAIN STREET (ROUTE 17) - STA. 104+76 TO STA. 125+50
C-13 PLAN - MAIN STREET (ROUTE 17) - STA. 125+50 TO STA. 146+11
C-14 PROFILE - MAIN STREET (ROUTE 17) - STA. 125+50 TO STA. 146+11
C-15 PLAN - MAIN STREET (ROUTE 17) - STA. 146+11 TO STA. 167+73
C-16 PROFILE - MAIN STREET (ROUTE 17) - STA. 146+11 TO STA. 167+73
C-17 PLAN - MAIN STREET (ROUTE 17) - STA. 167+73 TO STA. 177+75
C-18 PROFILE - MAIN STREET (ROUTE 17) - STA.167+73 TO STA. 177+75
C-19 PLAN - MAIN STREET (ROUTE 17) - STA. 177+75 TO 188+60
C-20 PROFILE - MAIN STREET (ROUTE 17) - STA. 177+75 TO STA. 188+60
C-21 PLAN - MAIN STREET (ROUTE 17) - STA. 188+60-STA. 199+40, STA. 400+00-STA. 403+25 & STA. 600+00-STA. 602+01
C-22 PROFILE - MAIN STREET (ROUTE 17) - STA. 188+60 TO STA. 199+40
C-23 PLAN - MAIN STREET (ROUTE 17) - STA. 199+40 TO STA. 207+00 & STA. 500+00 TO 504+00
C-24 PROFILE - MAIN STREET (ROUTE 17) - STA. 199+40 TO STA. 207+00
C-25 PLAN - MAIN STREET (ROUTE 17) - STA. 207+00 TO STA. 209+25
C-26 PROFILE - MAIN STREET (ROUTE 17) - STA. 207+00 TO STA. 209+25

CIVIL - CONTINUED

C-27 PLAN - MAPLE AVENUE - STA. 900+00 TO STA. 905+50
C-28 PROFILE - MAPLE AVENUE - STA. 900+00 TO STA.905+50
C-29 PLAN - MAPLE AVENUE - STA. 905+50 TO STA. 912+88
C-30 PROFILE - MAPLE AVENUE - STA. 905+50 TO STA. 912+88
C-31 PLAN - MAPLE AVE & WALLINGFORD RD - STA. 912+88 TO STA. 922+50 & STA. 602+01 TO STA. 609+50
C-32 PROFILE - MAPLE AVENUE - STA. 912+88 TO STA. 922+50
C-33 PLAN - MAPLE AVENUE - STA. 922+50 TO STA. 933+50
C-34 PROFILE - MAPLE AVENUE - STA. 922+50 TO STA. 933+50
C-35 PLAN - MAPLE AVENUE & TALCOTT LANE - STA. 933+50 TO STA. 940+88 & STA. 301+80 TO STA. 306+13
C-36 PROFILES - MAPLE AVENUE & TALCOTT LANE - STA. 933+50 TO STA. 940+88 & STA. 300+00 TO STA. 306+13
C-37 PLAN - MAIDEN LANE - STA. 403+25 TO STA. 409+50
C-38 PROFILE - MAIDEN LANE - STA. 400+00 TO STA. 409+50
C-39 PLAN - MAIDEN LANE - STA. 409+50 TO STA. 426+14 & STA. 536+40 TO STA. 538+55
C-40 PROFILE - MAIDEN LANE - STA. 409+50 TO STA. 426+14
C-41 PLAN - PICKETT LANE - STA. 504+00 TO STA. 525+50
C-42 PROFILE - PICKETT LANE - STA. 500+00 TO STA. 520+00
C-43 PLAN - PICKETT LANE - STA. 525+50 TO STA. 536+40
C-44 PROFILE - PICKETT LANE - STA. 520+00 TO STA. 538+55
C-45 PROFILES - MISCELLANEOUS
C-46 PROFILES - MISCELLANEOUS
C-47 ENLARGED SITE PLANS BOOSTER STATION AND METER VAULT

CIVIL DETAILS

C-501 EROSION AND SEDIMENTATION CONTROL DETAILS
C-502 WATER MAIN DETAILS
C-503 WATER SERVICE DETAILS
C-504 STORM DRAINAGE DETAILS
C-505 SURFACE RESTORATION DETAILS
C-506 WATER STORAGE TANK SITE DETAILS
C-507 METAL BEAM RAIL (TYPE RB-350) GUIDERAIL DETAILS
C-508 TRAFFIC SIGNALS LOOP DETECTOR DETAILS
C-509 MAIN STREET AT MIDDLEFIELD ROAD - EXISTING TRAFFIC CONTROL SIGNAL PLAN
C-510 MAIN STREET AT WALLINGFORD ROAD - EXISTING TRAFFIC CONTROL SIGNAL PLAN
C-511 MAIN STREET AT PICKETT LANE - EXISTING TRAFFIC CONTROL SIGNAL PLAN

ARCHITECTURAL DETAILS

A-501 WATER METER BUILDING DETAILS
A-502 TALCOTT RIDGE BOOSTER STATION DETAILS

MECHANICAL

M-001 LEGEND, GENERAL NOTES, AND ABBREVIATIONS
M-101 TANK PLAN AND SECTIONS
M-102 TANK DETAILS I
M-103 TANK DETAILS II
M-104 TANK DETAILS III
M-105 TANK DETAILS IV
M-106 TANK DETAILS V
M-107 ALTITUDE VALVE VAULT PLAN AND SECTION
M-108 ALTITUDE VALVE VAULT SECTIONS
M-109 WATER METER VAULT PLAN AND SECTION
M-110 PRESSURE REDUCING VALVE VAULT
M-111 DURHAM BOOSTER STATION MODIFICATIONS
M-112 LONG HILL STATION MODIFICATIONS
M-113 BOOSTER STATION PLAN AND SECTIONS
M-501 STANDARD DETAILS
S-001 PRECAST STRUCTURE SPECIFICATIONS AND DETAILS

INSTRUMENTATION

DI-1 LEGEND, ABBREVIATIONS AND NOTES
DI-2 SYSTEM ARCHITECTURE
DI-3 LOOP DECSRIPTIONS
DI-4 CHERRY HILL TANK AND ALTITUDE VAULT
DI-5 LONG HILL PUMP STATION
DI-6 TALCOTT RIDGE BOOSTER STATION
DI-7 WATER METER VAULT AND PRESSURE REDUCING VAULT

ELECTRICAL

E-1 LEGEND, ABBREVIATIONS, AND GENERAL NOTES
E-2 CONDUIT, WIRE, AND LIGHTING SCHEDULES AND AREA CLASSIFICATION
E-3 CHERRY HILL STORAGE TANK ELECTRICAL SITE PLAN
E-4 CHERRY HILL STORAGE TANK ELECTRICAL PART PLAN & RISER DIAGRAMS
E-5 ALTITUDE VALVE VAULT PLANS AND DIAGRAMS
E-6 WATER METER VAULT PLANS AND DIAGRAMS
E-7 PRESSURE REDUCING VAULT PLANS AND DIAGRAMS
E-8 ELECTRICAL ENCLOSURE LAYOUTS AND DETAILS
E-9 LONG HILL PS - SINGLE LINE DIAGRAM - DEMO
E-10 LONG HILL PS - SINGLE LINE DIAGRAM - MODIFICATIONS
E-11 LONG HILL PS - ELECTRICAL DEMO PLAN
E-12 LONG HILL PS - ELECTRICAL POWER PLAN
E-13 LONG HILL PS - WIRING SCHEMATICS
E-14 TALCOTT RIDGE BOOSTER STATION SINGLE LINE DIAGRAM AND SCHEMATICS
E-15 TALCOTT RIDGE BOOSTER STATION PLANS AND DIAGRAMS

MARK	DATE	MADE BY	CHECKED	DESCRIPTION
				100% SUBMITTAL

REVISIONS

AECOM, INC.
50 MYRTLE ROCKS DRIVE
ROCKY HILL, CT 06067
PHONE (860) 263-3800

EPA CONTRACT NO. EP-S1-06-01
DURHAM MEADOWS WATERLINE RD
DURHAM AND MIDDLETOWN, CONNECTICUT
TASK ORDER NO. 0060-RD-RD-01D5

CITY OF MIDDLETOWN & TOWN OF DURHAM

INDEX OF DRAWINGS

GENERAL

PROJECT NO:	60275749
CAD DWG FILE:	G-DUR-002
DESIGNED BY:	KPR
DRAWN BY:	KPR
DEPT CHECK:	GRS
PROJ CHECK:	RMB
DATE:	APRIL 2018
SCALE:	NOT TO SCALE

G-2

ANSI D – 11-Apr-18

GENERAL NOTES:

1. THIS SURVEY HAS BEEN PREPARED BY FREEMAN COMPANIES, LLC, IN ACCORDANCE WITH THE REGULATIONS OF CONNECTICUT STATE AGENCIES, SECTIONS 20–300b–1 THRU 20–300b–20, THE "STANDARDS FOR SURVEYS AND MAPS IN THE STATE OF CONNECTICUT" ADOPTED BY THE CONNECTICUT ASSOCIATION OF LAND SURVEYORS, INC. ON SEPTEMBER 26, 1996.
2. PROPERTY LINES SHOWN ON THE PLANS ARE APPROXIMATE AND ARE NOT CERTIFIED AS ACCURATE UNDER A–2 STANDARDS. UNLESS OTHERWISE NOTED, PUBLIC FACILITIES WILL BE LOCATED WITHIN MUNICIPAL OR STATE RIGHTS OF WAY. THE TYPE OF SURVEY IS A "PERIMETER BOUNDARY AND LIMITED TOPOGRAPHIC" SURVEY INTENDED TO BE USED AS A BASIS FOR WATER LINE DESIGN. THE BOUNDARY DETERMINATION CATEGORY IS THAT OF A DEPENDENT RESURVEY. THE PROPERTY LINE LOCATIONS DEPICTED HEREIN ARE THE RESULT OF RECORD RESEARCH AND LIMITED FIELD MEASUREMENTS AND ARE NOT INTENDED TO BE USED FOR CONVEYANCE PURPOSES.
3. THE SURVEY ACCURACY CONFORMS TO HORIZONTAL CLASS "A–2" AND VERTICAL ACCURACY CLASS "V–3" FOR CONTROL POINTS AND BENCHMARKS. STREET AND PROPERTY LINES DEPICTED HEREON CONFORM TO CLASS "D" ACCURACY STANDARDS. PLANIMETRIC FEATURES AND CONTOURS ARE FROM PHOTOGRAMMETRIC TECHNIQUES PERFORMED BY GOLDEN AERIAL SURVEYS INCORPORATED USING MARCH 27, 2013 PHOTOGRAPHY IN ACCORDANCE WITH THE NATIONAL MAP STANDARDS FOR PHOTOGRAMMETRIC MAPPING WHICH CONFORMS TO CLASS T–3 ACCURACY STANDARDS.
4. COORDINATES DEPICTED HEREIN REFER TO THE CONNECTICUT COORDINATE SYSTEM OF 1983 AS REALIZED FROM OBSERVATIONS REFERENCED TO NAD83. ELEVATIONS DEPICTED HEREIN ARE BASED UPON NAVD88.
5. EXISTING UTILITIES IN THE STREETS WITHIN THE LIMITS OF THE WORK ARE TO REMAIN IN SERVICE DURING CONSTRUCTION. WATER AND WASTEWATER SERVICES SHALL BE MAINTAINED AT ALL TIMES THROUGHOUT THE LIFE OF THE PROJECT.
6. UNDERGROUND UTILITIES AS SHOWN ARE APPROXIMATE ONLY. ADDITIONAL UTILITIES MAY BE PRESENT. THE CONTRACTOR SHALL DETERMINE THE ACCURATE LOCATIONS OF THE UTILITIES SHOWN AND THE POSSIBLE EXISTENCE OF OTHER UNDERGROUND UTILITIES BY PROVIDING OBSERVATION TEST PITS. THE CONTRACTOR SHALL NOTIFY ALL UTILITY COMPANIES IN WRITING AT LEAST 72 HOURS (EXCLUDING SATURDAYS, SUNDAYS AND LEGAL HOLIDAYS) BEFORE EXCAVATING IN ANY PUBLIC WAY. CONTRACTOR SHALL ALSO NOTIFY CONNECTICUT CALL–BEFORE–YOU–DIG AT 1–800–922–4455 AT LEAST 72 HOURS PRIOR TO START OF THE WORK.
7. THE CONTRACTOR IS RESPONSIBLE FOR MAKING ALL ARRANGEMENTS FOR ANCHORING, SUPPORTING AND/OR RELOCATING AND PROTECTING ALL UTILITIES DURING CONSTRUCTION. ALL COSTS SHALL BE INCLUDED IN THE LUMP SUM BID. IN THE EVENT OF DAMAGE, THE CONTRACTOR SHALL BE RESPONSIBLE FOR THE COST OF ALL REPAIRS.
8. EXISTING UTILITIES INTERFERING WITH THE WORK SHALL BE RELOCATED AS DIRECTED BY THE ENGINEER. IT SHALL BE THE CONTRACTOR'S RESPONSIBILITY TO COORDINATE WITH THE APPROPRIATE UTILITY COMPANIES PRIOR TO CONSTRUCTION.
9. ALL WALL AND SLAB PENETRATIONS SHALL BE SEALED WATERTIGHT.
10. THE CONTRACTOR SHALL RESTORE ALL DISTURBED AREAS TO PRECONSTRUCTION GRADES UPON COMPLETION OF WATER STORAGE TANK AND WATER MAIN CONSTRUCTION AND TESTING, EXCEPT WHERE PERMANENT GRADE CHANGES ARE SPECIFICALLY NOTED OR ORDERED.
11. THE CONTRACTOR IS RESPONSIBLE FOR THE PROTECTION OF THE EXISTING FEATURES AND STRUCTURES WITHIN AND ADJACENT TO THE WORK. IN THE EVENT OF DAMAGE, THE REPAIRS OR REPLACEMENT SHALL BE COMPLETED AT THE CONTRACTOR'S EXPENSE AS APPROVED BY THE ENGINEER.
12. THE CONTRACTOR IS RESPONSIBLE FOR SEQUENCING OF ALL WORK TO AVOID CONFLICTS BETWEEN ALL PROPOSED WORK.
13. THE CONTRACTOR IS RESPONSIBLE FOR PERFORMING ALL WORK AS INDICATED ON THE DRAWINGS, IN THE SPECIFICATIONS AND AS DIRECTED BY THE ENGINEER IN CONFORMANCE WITH ALL APPLICABLE CODES AND IN A PROPER AND WORKMANLIKE MANNER.
14. THE CONTRACTOR IS RESPONSIBLE FOR MAINTAINING PROPER AND ADEQUATE TRENCH SHORING AND BRACING AT ALL TIMES IN ACCORDANCE WITH REQUIRED SAFETY STANDARDS.
15. THE CONTRACTOR SHALL PREPARE AND SUBMIT A TRAFFIC MANAGEMENT PLAN FOR WORK PRIOR TO THE START OF CONSTRUCTION TO SHOW HOW TRAFFIC FLOW WILL BE MAINTAINED DURING CONSTRUCTION. THE CONTRACTOR SHALL FURNISH ALL PROTECTIVE AND/OR WARNING DEVICES AS REQUIRED TO CONTROL TRAFFIC AND PROTECT THE PUBLIC IN ALL WORK AREAS. THE CONTRACTOR SHALL MAINTAIN EMERGENCY ACCESS TO ALL AREAS AFFECTED BY THE WORK AT ALL TIMES. THIS PLAN SHALL BE COORDINATED WITH THE ENGINEER, CITY OF MIDDLETOWN, TOWN OF DURHAM, AND ALL EMERGENCY DEPARTMENTS.
16. PRIOR TO CLOSING ANY ROADWAY (PARTIALLY OR COMPLETELY), CTDOT, MUNICIPAL POLICE AND LOCAL FIRE OFFICIALS SHALL BE NOTIFIED. THE CONTRACTOR SHALL COMPLY WITH ANY CONDITIONS SET BY THE CTDOT, AND PUBLIC SAFETY OFFICIALS, IN CONJUNCTION WITH THE OWNER AND ENGINEER.
17. IN ADDITION TO COMPLIANCE WITH THE GENERAL REQUIREMENTS SECTION OF THE SPECIFICATIONS, THE CONTRACTOR SHALL TAKE ALL NECESSARY MEASURES AND SHALL PROVIDE ALL NECESSARY CONTINUOUS BARRIERS OF SUFFICIENT TYPE, SIZE AND STRENGTH TO PREVENT ACCESS TO ALL OPEN EXCAVATIONS AT THE COMPLETION OF EACH DAY'S WORK.
18. THE CONTRACTOR SHALL REMOVE AND DISPOSE OF ALL WASTE BUILDING MATERIAL, CONCRETE, MASONRY, TREES, SHRUBS, DEBRIS AND OTHER MATERIALS NECESSARY FOR THE SATISFACTORY COMPLETION OF THE WORK AND AS REQUIRED BY THE OWNER. CONSTRUCTION DEBRIS SHALL BE DISPOSED OF IN STRICT ACCORDANCE WITH ALL APPLICABLE LOCAL, STATE AND FEDERAL LAWS.
19. THE CONTRACTOR SHALL RESTORE CROSS COUNTRY AREAS, PAVEMENT, PAVEMENT MARKINGS, SIDEWALKS, UTILITIES, FENCES, WALLS, OTHER INFRASTRUCTURE AND APPURTENANCES DISTURBED BY CONSTRUCTION ACTIVITIES TO THEIR PRE–CONSTRUCTION CONDITIONS UNLESS OTHERWISE NOTED. CONTRACTOR SHALL LIMIT HIS CONTRACT WORK AREA AND OPERATIONS TO WITHIN 10 FEET OF THE PROPOSED WORK INDICATED IN THE DRAWINGS. ALL AREAS AND UTILITIES OUTSIDE OF CONTRACT OR PAVEMENT LIMITS DISTURBED BY THE CONTRACTOR SHALL BE RESTORED AT NO ADDITIONAL COST TO THE OWNER.
20. THE CONTRACTOR SHALL BE RESPONSIBLE FOR OBTAINING ALL NECESSARY PERMITS AT NO ADDITIONAL COST TO THE OWNER.
21. NO TREES OR TREE LIMBS ALONG THE ENTIRE ROUTE OF CONSTRUCTION ON PUBLIC WAYS SHALL BE CUT UNLESS OTHERWISE DIRECTED BY THE ENGINEER, OR INDICATED ON THE DRAWINGS.
22. ALL EROSION CONTROL MEASURES FOR THE CONSTRUCTION ZONE SHALL BE IN PLACE PRIOR TO THE START OF CONSTRUCTION.
23. CONTRACTOR TO PROVIDE AND MAINTAIN SEDIMENTATION AND EROSION CONTROL MEASURES TO PROTECT ALL CATCH BASINS, DRAINAGE INLETS AND SWALES IN THE CONSTRUCTION ZONE.
24. WHERE WATER MAINS ARE SHOWN TO CROSS EXISTING STORM DRAINS, THE NEW WATER MAIN SHALL BE INSTALLED SO THAT A FULL LENGTH OF WATER MAIN CROSSES THE STORM DRAIN MIDWAY BETWEEN THE JOINTS OF THE WATER MAIN.
25. STOCKPILING OF CONSTRUCTION MATERIALS WITHIN 100 FT. OF WATERWAYS IS PROHIBITED.
26. WETLAND DELINEATION WAS PERFORMED BY A CERTIFIED PROFESSIONAL SOIL SCIENTIST (CPSS #21734) IN JULY, 2013, SEPTEMBER, 2014, JULY, 2015, AND JULY, 2017.
27. THE CONTRACTOR SHALL MAINTAIN ACCESS TO ALL EXISTING FIRE HYDRANTS AT ALL TIMES. SHOULD AN EXISTING HYDRANT NEED TO BE TAKEN OUT OF SERVICE, THE CONTRACTOR SHALL NOTIFY THE LOCAL FIRE DEPARTMENT 24 HOURS PRIOR TO TAKING IT OUT OF SERVICE.
28. TEMPORARY TRENCH PAVEMENT SHALL BE INSTALLED, AT A MINIMUM, AT THE END OF EACH WORK DAY OR AS REQUIRED TO PROTECT INTEGRITY OF BACKFILLED TRENCH OR TO MAINTAIN SAFE PASSAGE OF TRAFFIC.
29. ALL EXISTING FRAMES, COVERS, BOXES, ETC. SHALL BE RAISED TO FINISH GRADES PRIOR TO PLACEMENT OF PERMANENT PAVEMENT WEARING COURSE.
30. THE CONTRACTOR SHALL EXERCISE CARE TO PREVENT DAMAGE TO ROOT SYSTEMS OF EXISTING TREES OR SHRUBS IN LOCATIONS OF PROPOSED UTILITIES.
31. WHERE AN EXISTING UTILITY IS FOUND TO CONFLICT WITH THE PROPOSED WORK, THE LOCATION, ELEVATION AND SIZE OF THE UTILITY SHALL BE ACCURATELY DETERMINED WITHOUT DELAY BY THE CONTRACTOR, AND THE INFORMATION FURNISHED TO THE OWNER'S REPRESENTATIVE FOR RESOLUTION OF THE CONFLICT.
32. ALL MAIN LINE WATER MAIN WORK TO BE DONE SHALL BE WITHIN THE PUBLIC RIGHT OF WAY OR EASEMENT.
33. THE CONTRACTOR SHALL COORDINATE ALL WORK AS NECESSARY WITH THE CITY OF MIDDLETOWN AND TOWN OF DURHAM.
34. REFER TO APPENDIX A FOUND IN VOLUME 2 OF 2 OF THE SPECIFICATIONS FOR SUBSURFACE BORING INFORMATION.
35. REFER TO APPENDIX B FOUND IN VOLUME 2 OF 2 OF THE SPECIFICATIONS FOR WATER SERVICE WORK ON PRIVATE PROPERTY INCLUDING SURFACE RESTORATION REQUIREMENTS.
36. WATER MAINS SHALL BE INSTALLED TO A MINIMUM DEPTH OF 4'–6" FROM FINISHED GRADE TO TOP OF PIPE.
37. THE MAXIMUM LENGTH OF WATER MAIN TO BE PRESSURE TESTED AT ONE TIME IS 2,000 FT.
38. THE WORK SITE SHALL BE RETURNED TO ITS ORIGINAL GRADE, WETLAND SOILS AND STREAM SUBSTRATES SHALL BE REPLACED TO THEIR ORIGINAL LOCATIONS, AND DISTURBED VEGETATED AREAS SHALL BE RE–VEGETATED WITH NATIVE PLANTS PROMPTLY AFTER WORK IS COMPLETE.
39. ALL EXTERIOR DUCTILE IRON PIPE SHALL BE DOUBLE THICKNESS CEMENT LINED AND THICKNESS CLASS 52.
40. IN INSTALLING THE WORK OF THIS CONTRACT THE CONTRACTOR SHALL IDENTIFY AND LOCATE ANY EXISTING LAWN OR LANDSCAPE SPRINKLER SYSTEMS AND SHALL PROTECT THEM FROM DAMAGE DURING CONSTRUCTION. THE CONTRACTOR SHALL MAKE ANY NECESSARY REPAIRS AT HIS OWN EXPENSE.
41. THE WATER SYSTEM OPERATOR WILL NEED TO DEVELOP AND IMPLEMENT A WATER MAIN FLUSHING PROGRAM IN ORDER TO MAINTAIN WATER QUALITY WITHIN ACCEPTABLE REGULATORY PARAMETERS.
42. THE CONTRACTOR SHALL LAYOUT AND STAKE ALL PROPOSED FIRE HYDRANT LOCATIONS IN THE FIELD PRIOR TO INSTALLATION FOR OWNER AND FIRE MARSHAL REVIEW AND APPROVAL. THE CONTRACTOR SHALL ADJUST FIRE HYDRANT LOCATIONS AS DIRECTED BY OWNER AT NO ADDITIONAL COST.
43. WHENEVER POSSIBLE, PRESSURIZED WATER SERVICE MAINS AND BUILDING SEWER LINES SHALL BE LOCATED IN SEPARATE TRENCHES AT LEAST 10 FEET APART. WHERE LAID IN THE SAME TRENCH, THE WATER PIPE SHALL BE LAID ON A BENCH AT LEAST 18 INCHES ABOVE THE TOP OF THE SEWER PIPE AND AT LEAST 12 INCHES (PREFERABLY 18 INCHES) FROM THE SIDE OF THE SEWER TRENCH.
44. THE CONTRACTOR IS REQUIRED TO OBTAIN AN ENCROACHMENT PERMIT FROM THE CONNECTICUT DEPARTMENT OF TRANSPORTATION, DISTRICT 1 AND COMPLY WITH ALL REQUIREMENTS OF THE PERMIT INCLUDING BUT NOT LIMITED TO WORKING HOURS, TRAFFIC CONTROL REQUIREMENTS,AND SEQUENCING THE WORK WITHIN THE STATE OF CONNECTICUT HIGHWAY RIGHT OF WAY.
45. THE STREETS AND CONSTRUCTION SITES SHALL BE CLEANED AND SWEPT ON A DAILY BASIS TO THE SATISFACTION OF THE TOWN OF DURHAM, CITY OF MIDDLETOWN, AND CT DOT. A REGENERATIVE AIR SWEEPER MUST BE AVAILABLE FOR USE EVERY DAY AND PROPER DUST CONTROL PROCEDURES EMPLOYED.

GENERAL LEGEND

EXISTING

- IRON PIPE
- PROPERTY MONUMENT
- "C–L" CATCH BASIN
- "C" CATCH BASIN
- ROUND DRAIN
- SQUARE DRAIN
- STORM DRAIN MANHOLE
- HAND HOLE
- W.G. WATER VALVE
- G.G. GAS VALVE
- HYDRANT
- GUY WIRE
- TELEPHONE MANHOLE
- WATER MANHOLE
- MANHOLE (OF UNKNOWN TYPE)
- SIGN (SINGLE POST)
- SIGN (DOUBLE POST)
- UTILITY POLE
- TRAFFIC CONTROLLER CABINET
- UTILITY POLE W/ LIGHT
- SIDEWALK LAMP POST
- BOULDER/ROCK
- TREE
- x427.3 SPOT ELEVATION
- STRUCTURE
- WETLANDS DELINEATION
- SMH SEWER MANHOLE
- MW MONITORING WELL
- BORING
- PROPERTY/STREET LINE
- EXISTING BUILDING
- EDGE OF PAVEMENT
- FENCE
- APPROXIMATED WATER LINE
- STORM DRAINAGE PIPE
- 198 2' CONTOUR INTERVAL
- 200 10' CONTOUR INTERVAL
- Septic Tank SEPTIC TANK
- OH–W OVERHEAD WIRE
- Well WELL
- STONE WALL

PROPOSED

- CHAIN LINK METAL FENCE
- BUTTERFLY VALVE
- GATE VALVE
- G GAS
- BITUMINOUS PAVEMENT DRIVE
- EROSION CONTROL
- CONCRETE
- PIPING 20" AND SMALLER
- PIPING GREATER THAN 20"
- 1+00 CENTERLINE WITH STATIONING & TICK MARK
- PERMANENT EASEMENT
- TEMPORARY EASEMENT
- LIMIT OF PAVEMENT OVERLAY
- LIMIT OF PAVEMENT OVERLAY
- PLUG/ CAP (WATER)
- FLOW ARROW
- A AIR RELEASE VALVE
- B BLOW–OFF
- GATE VALVE
- REDUCER
- TEE
- FIRE HYDRANT
- TEST PIT
- MATCH LINE
- CORPORATION STOP
- CURB STOP
- SOLID SLEEVE
- M WATER METER PIT
- X TREE AND STUMP TO BE REMOVED
- TYPE C CATCH BASIN
- TYPE CL CATCH BASIN

ABBREVIATIONS

AW	ABANDONED WATER
BCLC	BITUMINOUS CURB
BIT.	BITUMINOUS CONCRETE LIP CONCRETE
BM	BENCHMARK
BV	BUTTERFLY VALVE
CATV	CABLE TELEVISION
CB	CATCH BASIN
C.I.	CAST IRON
CLDI	CEMENT LINED DUCTILE IRON
C.L.F.	CHAIN LINK FENCE
CL&P	CONNECTICUT LIGHT AND POWER
C.M.P.	CORRUGATED METAL PIPE
CONC.	CONCRETE
CP	CONTROL POINT
DIA. or ø	DIAMETER
D.I.	DUCTILE IRON
DMH	DRAIN MANHOLE
E	EAST
EL	ELEVATION
EOB	END OF BORING
EXIST. or EX.	EXISTING
EXT.	EXTENTION
FIELD	FIELD MEASURED
F.F.	FINISHED FLOOR
F.L.	FLOW LINE
GV	GATE VALVE
HDPE	HIGH DENSITY POLYETHYLENE
I.R.F.	IRON ROD FOUND
INV	INVERT
LAT CONN	LATERAL CONNECTION
LF	LINEAR FEET
MH	MANHOLE
MIN.	MINIMUM
MJ	MECHANICAL JOINT
N	NORTH
PROP.	PROPOSED
PK	PK NAIL
PVC	POLYVINYL CHLORIDE
RC	REINFORCED CONCRETE
RCCE	REINFORCED CONCRETE CULVERT END
R.C.P.	REINFORCED CONCRETE PIPE
R.S.	RESILIENT SEAT
S	SOUTH
SAN.	SANITARY
SMH	SANITARY SEWER MANHOLE
ST	STEEL
STM.	STORM
TBD	TO BE DETERMINED
TELE	TELEPHONE
TF	TOP OF FRAME
TYP.	TYPICAL
V.A. TEE	VALVE ANCHORING TEE
VERT.	VERTICAL
W/	WITH
W	WATER
W	WEST
W.V.	WATER VALVE

100% SUBMITTAL

REVISIONS

MARK	DATE	MADE BY	CHECKED	DESCRIPTION

AECOM, INC.
157 VOLUNTEER DRIVE
ROCKY HILL, CT 06067
PHONE (860) 263-3800

EPA CONTRACT NO. EP-S1-06-01
DURHAM MEADOWS WATERLINE RD
DURHAM AND MIDDLETOWN, CONNECTICUT
TASK ORDER NO. 0060-RD-RD-01D5

GENERAL NOTES, LEGEND AND ABBREVIATIONS

GENERAL

PROJECT NO:	60275749
CAD DWG FILE:	G–DUR–003
DESIGNED BY:	MCC
DRAWN BY:	MCC
DEPT CHECK:	GRS
PROJ CHECK:	RMB
DATE:	APRIL 2018
SCALE:	AS NOTED

G-3

ANSI D – 29–Jan–18

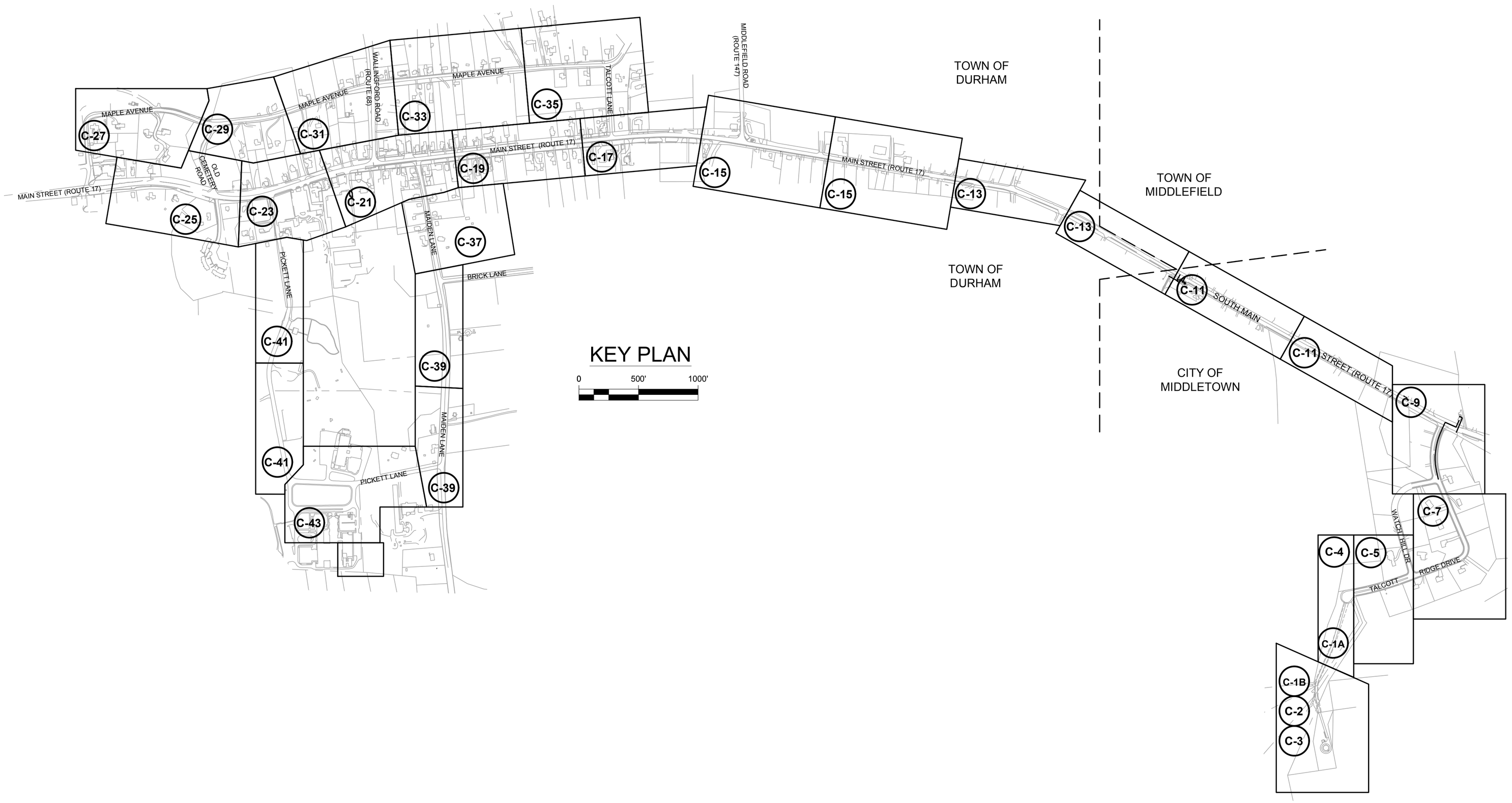

C-1 - PLAN SHEET NUMBER

REFER TO SHEET G-2 FOR PROFILE SHEET NUMBERS

MARK	DATE	MADE BY	CHECKED	DESCRIPTION
				100% SUBMITTAL

REVISIONS

AECOM, INC.
500 NORTH MAIN STREET, DRIVE
ROCKY HILL, CT 06067
PHONE (860) 263-3800

AECOM

EPA CONTRACT NO. EP-S1-06-01
DURHAM MEADOWS WATERLINE RD
DURHAM AND MIDDLETOWN, CONNECTICUT
TASK ORDER NO. 0060-RD-RD-0105

CITY OF MIDDLETOWN & TOWN OF DURHAM
KEY PLAN
GENERAL

PROJECT NO:	60275749
CAD DWG FILE:	G-DUR-004
DESIGNED BY:	NAV
DRAWN BY:	NAV
DEPT CHECK:	GRS
PROJ CHECK:	RMB
DATE:	APRIL 2018
SCALE:	1" = 500'

G-4

ANSI D – 22-Jan-18

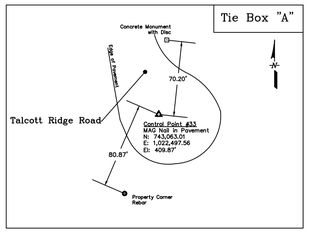

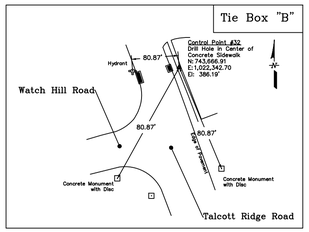

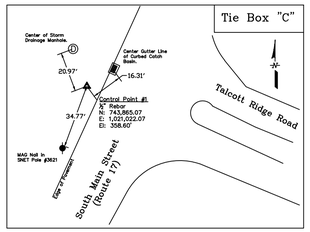

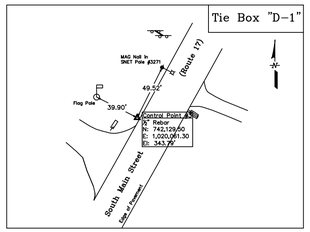

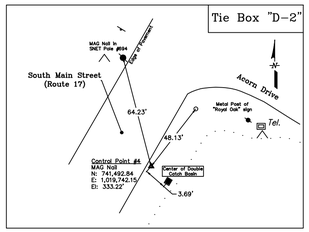

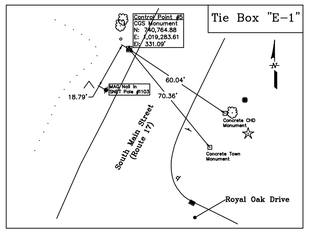

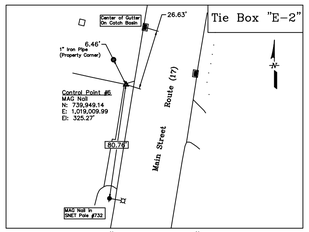

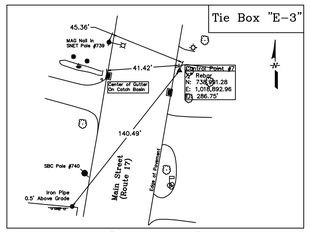

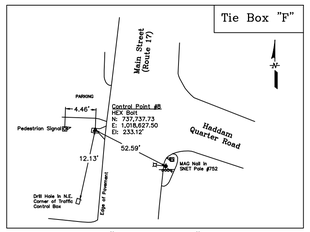

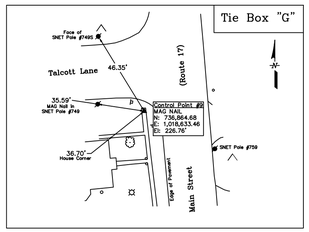

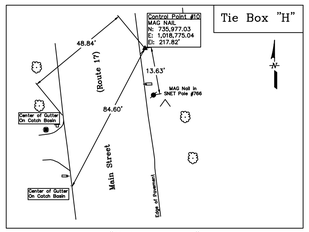

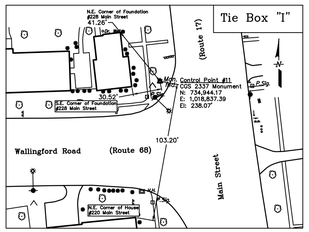

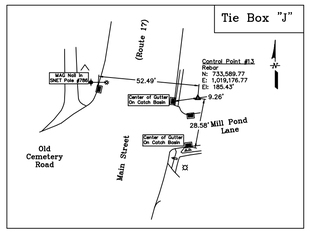

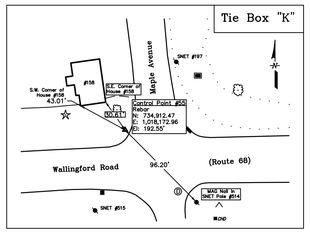

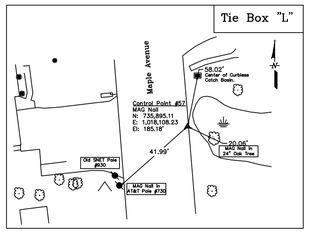

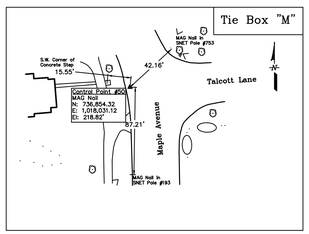

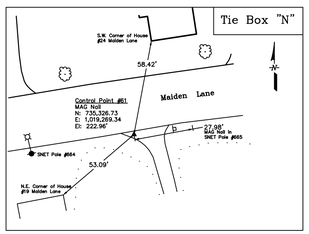

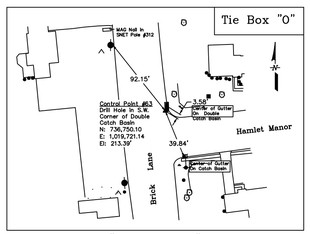

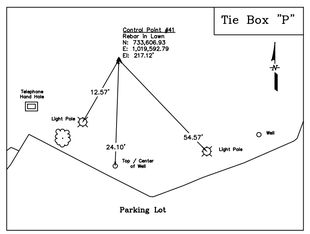

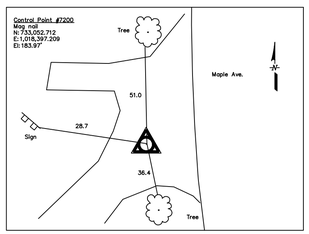

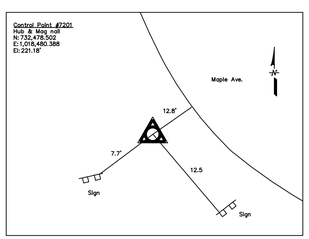

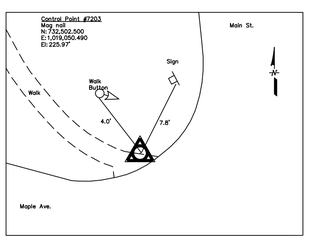

N

REVISIONS				
MARK	DATE	MADE BY	CHECKED	DESCRIPTION

100% SUBMITTAL

AECOM, INC.
250 APPROACH CHOICE DRIVE
ROCKY HILL, CT 06067
PHONE (860) 263-3800

EPA CONTRACT NO. EP-S1-06-01
DURHAM MEADOWS WATERLINE RD
DURHAM AND MIDDLETOWN, CONNECTICUT
TASK ORDER NO. 0060-RD-RO-0105

CITY OF MIDDLETOWN & TOWN OF DURHAM
SURVEY CONTROL POINT TIE DIAGRAMS

GENERAL

PROJECT NO:	60275749
CAD DWG FILE:	G-DUR-005
DESIGNED BY:	KPR
DRAWN BY:	KPR
DEPT CHECK:	GRS
PROJ CHECK:	RMB
DATE:	APRIL 2018
SCALE:	NOT TO SCALE

G-5

ANSI D – 11-Apr-18

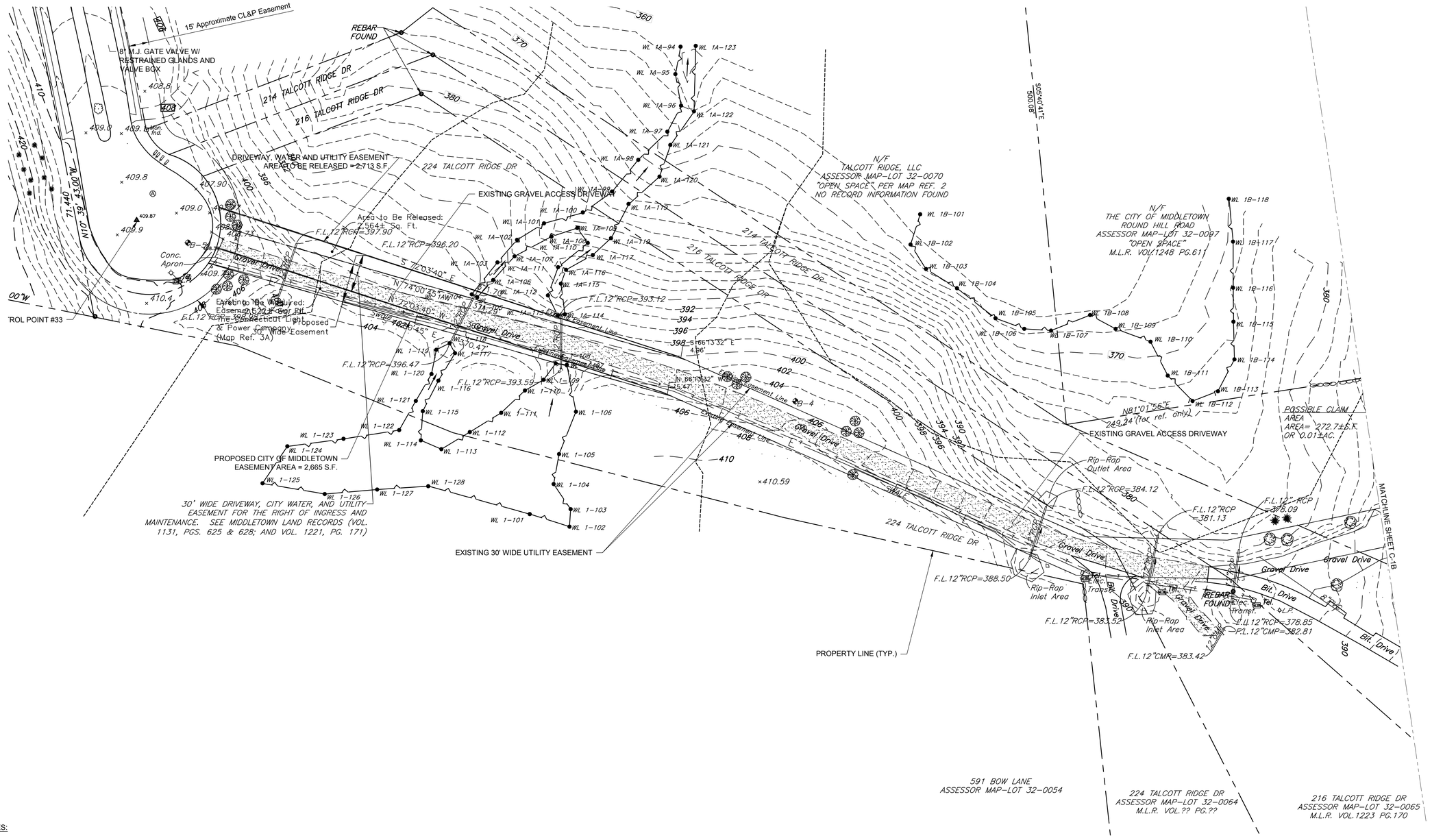

NOTES:

1. FOR LEGEND, ABBREVIATIONS AND GENERAL NOTES, SEE SHEET G-3.
2. BORING LOCATIONS ARE BASED ON SUBSURFACE INVESTIGATION PERFORMED BY AECOM AND ITS DRILLING CONTRACTOR, NEW ENGLAND BORING, INC. OF GLASTONBURY, CT. REFER TO APPENDIX A OF THE SPECIFICATIONS FOR SUBSURFACE INFORMATION.

100% SUBMITTAL

MARK	DATE	MADE BY	CHECKED	DESCRIPTION

REVISIONS

AECOM
AECOM, INC.
50 MYRTLE AVENUE DRIVE
ROCKY HILL, CT 06067
PHONE (860) 263-3000

EPA CONTRACT NO. EP-S1-06-01
DURHAM MEADOWS WATERLINE RD
DURHAM AND MIDDLETOWN, CONNECTICUT
TASK ORDER NO. 0060-RD-RD-0105

CITY OF MIDDLETOWN
EXISTING CONDITIONS PLAN

CIVIL

PROJECT NO:	60275749
CAD DWG FILE:	CZ-DUR-001
DESIGNED BY:	KPR
DRAWN BY:	KPR
DEPT CHECK:	GRS
PROJ CHECK:	RMB
DATE:	APRIL 2018
SCALE:	AS NOTED

C-1A

ANSI D – 5-Feb-18

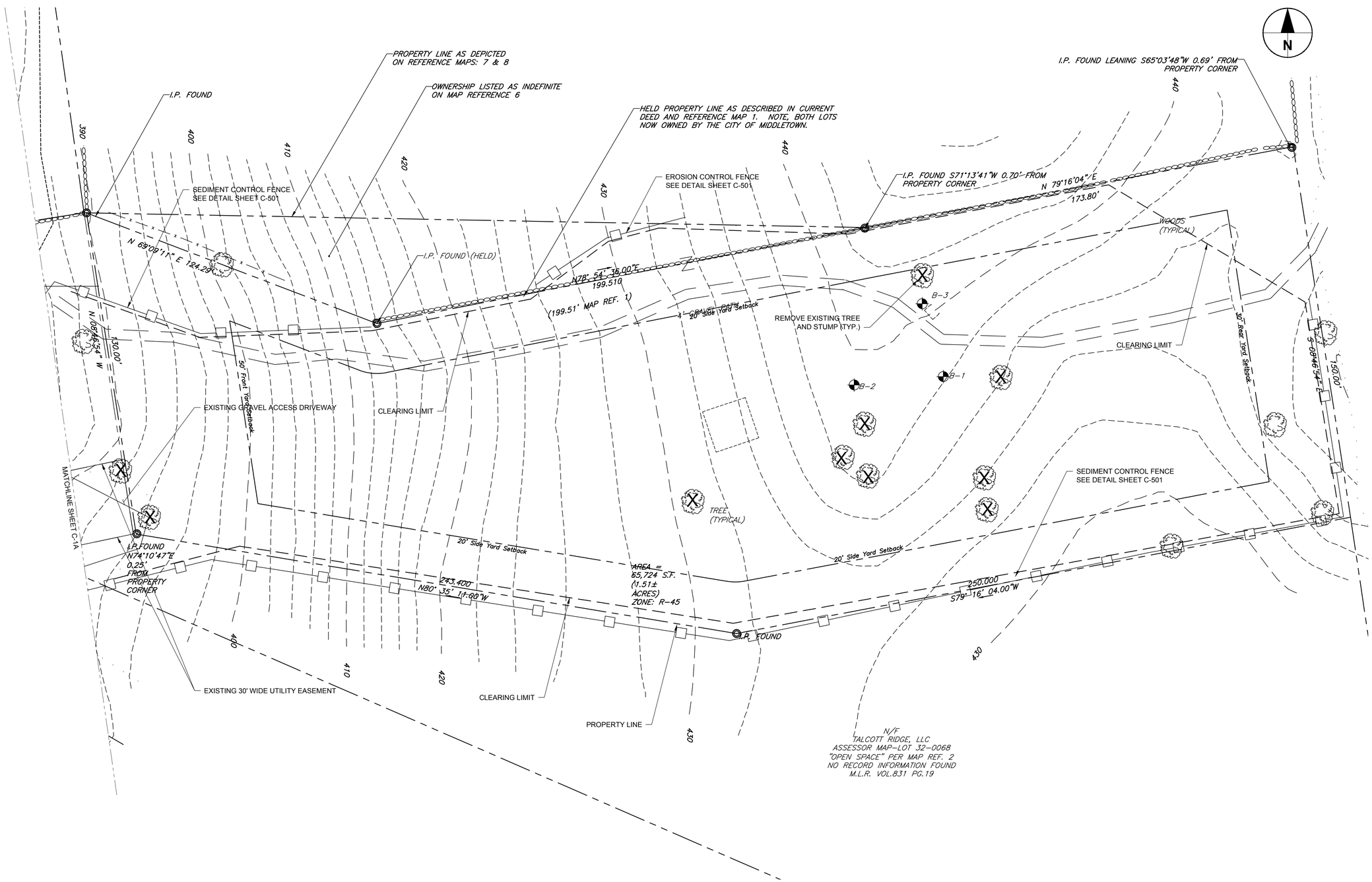

NOTES:

1. FOR LEGEND, ABBREVIATIONS AND GENERAL NOTES, SEE SHEET G-3.
2. BORING LOCATIONS ARE BASED ON SUBSURFACE INVESTIGATION PERFORMED BY AECOM AND ITS DRILLING CONTRACTOR, NEW ENGLAND BORING, INC. OF GLASTONBURY, CT. REFER TO APPENDIX A OF THE SPECIFICATIONS FOR SUBSURFACE INFORMATION.

SCALE: 1" = 20'

0 20' 40'

MARK	DATE	MADE BY	CHECKED	DESCRIPTION
				100% SUBMITTAL

REVISIONS

AECOM
AECOM, INC.
100 CONGRESS CITY DRIVE
ROCKY HILL, CT 06067
PHONE (860) 263-3000

EPA CONTRACT NO. EP-S1-06-01
DURHAM MEADOWS WATERLINE RD
DURHAM AND MIDDLETOWN, CONNECTICUT
TASK ORDER NO. 0060-RD-RD-0105

CITY OF MIDDLETOWN

EXISTING CONDITIONS & SITE PREPARATION

CIVIL

PROJECT NO:	60275749
CAD DWG FILE:	CZ-DUR-001
DESIGNED BY:	KPR
DRAWN BY:	KPR
DEPT CHECK:	GRS
PROJ CHECK:	RMB
DATE:	APRIL 2018
SCALE:	AS NOTED

C-1B

ANSI D – 5-Feb-18

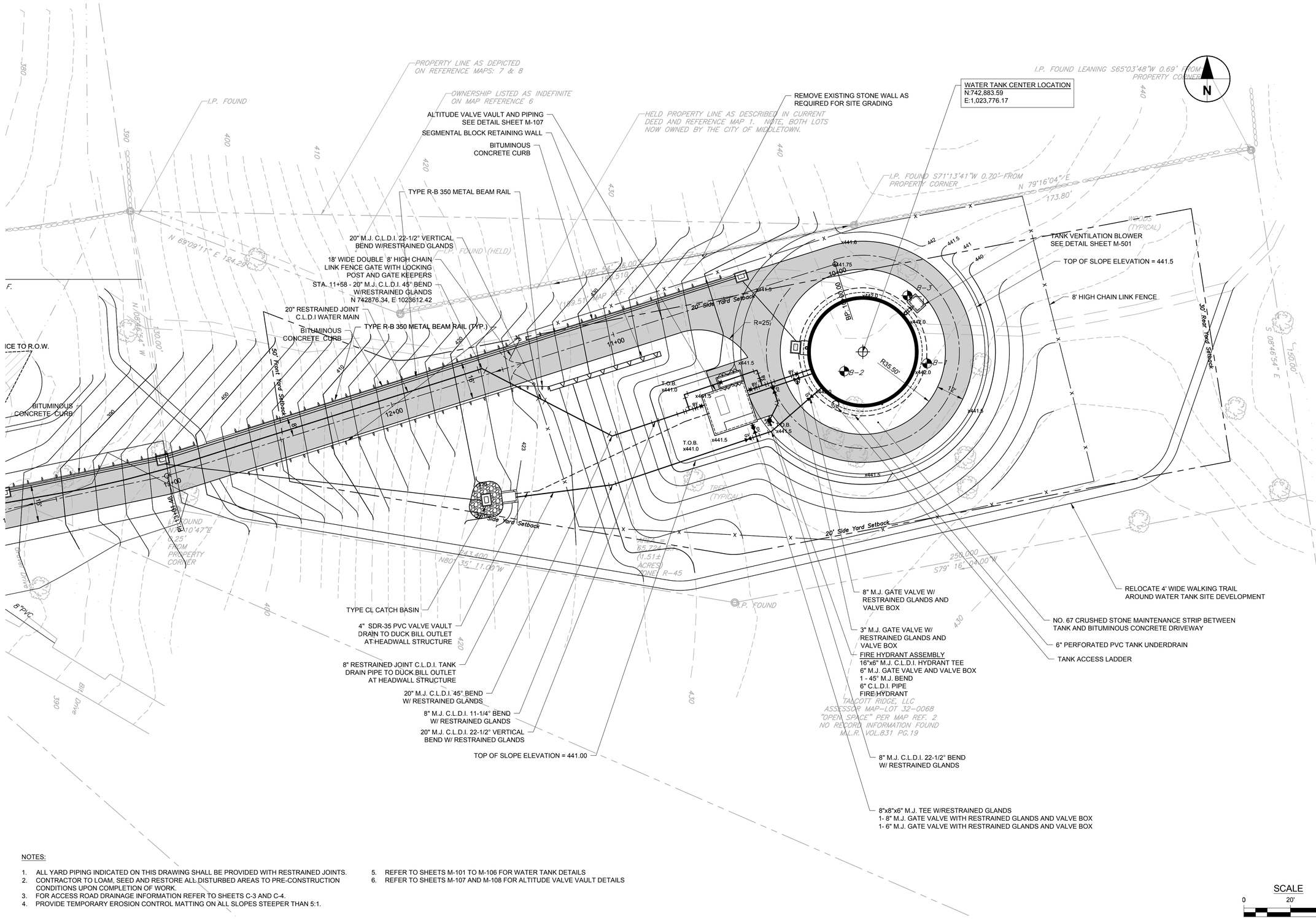

NOTES:

1. ALL YARD PIPING INDICATED ON THIS DRAWING SHALL BE PROVIDED WITH RESTRAINED JOINTS.
2. CONTRACTOR TO LOAM, SEED AND RESTORE ALL DISTURBED AREAS TO PRE-CONSTRUCTION CONDITIONS UPON COMPLETION OF WORK.
3. FOR ACCESS ROAD DRAINAGE INFORMATION REFER TO SHEETS C-3 AND C-4.
4. PROVIDE TEMPORARY EROSION CONTROL MATTING ON ALL SLOPES STEEPER THAN 5:1.
5. REFER TO SHEETS M-101 TO M-106 FOR WATER TANK DETAILS
6. REFER TO SHEETS M-107 AND M-108 FOR ALTITUDE VALVE VAULT DETAILS

SCALE
0 20' 40'
1" = 20'

MARK	DATE	MADE BY	CHECKED	DESCRIPTION
				100% SUBMITTAL

REVISIONS

AECOM
AECOM, INC.
500 SOUTH ROBERTS DRIVE
ROCKY HILL, CT. 06067
PHONE (860) 263-3800

EPA CONTRACT NO. EP-S1-06-01
DURHAM MEADOWS WATERLINE RD
DURHAM AND MIDDLETOWN, CONNECTICUT
TASK ORDER NO. 0060-RD-RD-01D5

CITY OF MIDDLETOWN
SITE, GRADING AND PIPING
CIVIL

PROJECT NO:	60275749
CAD DWG FILE:	CZ-DUR-002
DESIGNED BY:	KPR
DRAWN BY:	KPR
DEPT CHECK:	GRS
PROJ CHECK:	RMB
DATE:	APRIL 2018
SCALE:	AS NOTED

C-2

ANSI D – 4-May-18

NOTES:

1. CONTRACTOR SHALL MAINTAIN EMERGENCY ACCESS TO ALL PROPERTIES AT ALL TIMES.
2. CONTRACTOR SHALL PROVIDE, AS A MINIMUM, ONE WAY TRAFFIC ACCESS TO ALL PROPERTIES DURING WORKING HOURS.
3. CONTRACTOR SHALL BACKFILL ALL OPEN EXCAVATIONS AND MAINTAIN DRIVEWAY ACCESS FOR VEHICLES AND PEDESTRIANS DURING NON-WORKING HOURS, NIGHTS, WEEKENDS, AND HOLIDAYS.
4. ALL PORTIONS OF HARDWOOD TREES REMOVED GREATER THAN 4-INCHES IN DIAMETER SHALL BE CUT INTO 10 FOOT LENGTHS AND DELIVERED TO A LOCATION ON THE ADJACENT PROPERTY OWNERS LAND AS DIRECTED BY THE CONTRACTING OFFICER'S REPRESENTATIVE. CONTRACTOR SHALL BE RESPONSIBLE FOR REMOVING AND DISPOSING OF ALL OTHER BRUSH, STUMPS, WOOD, ROOTS, AND OTHER CLEARED VEGETATION NOT RETAINED BY THE PROPERTY OWNERS.
5. RESIDENTS WITHIN 500 FEET OF THE WATER TANK AND ACCESS DRIVEWAY SHALL BE NOTIFIED 24 HOURS IN ADVANCE OF ALL PLANNED ACTIVITIES THAT WILL GENERATE LOUD NOISES OR LARGE VIBRATIONS.

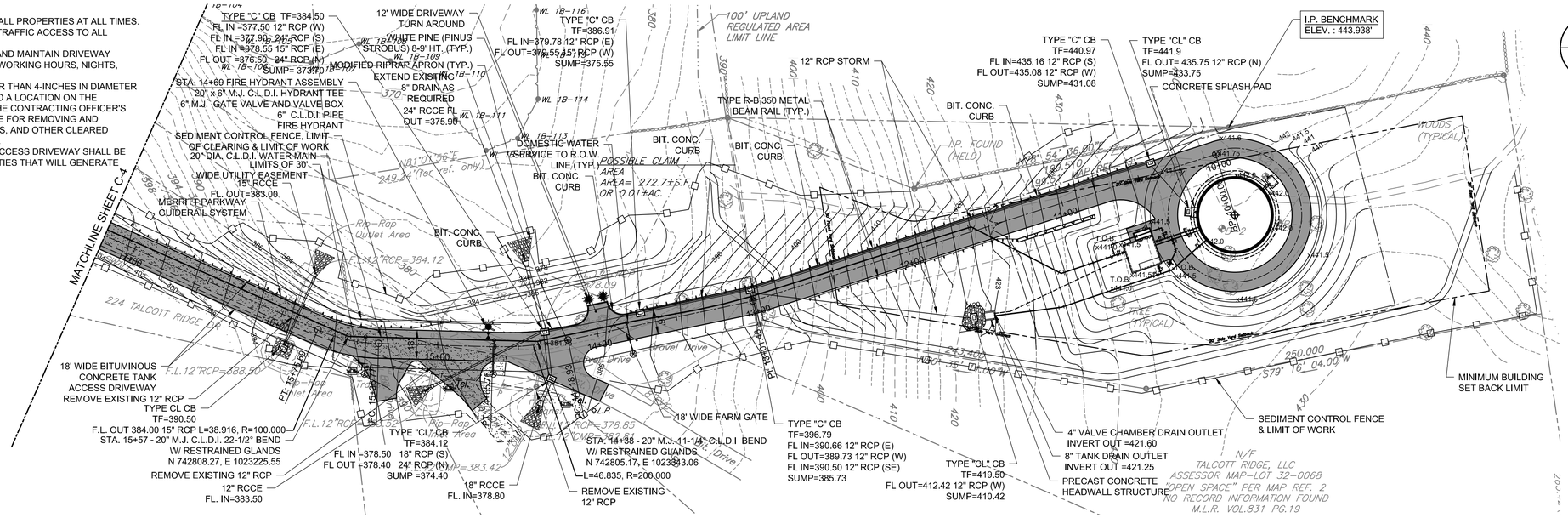

PLAN

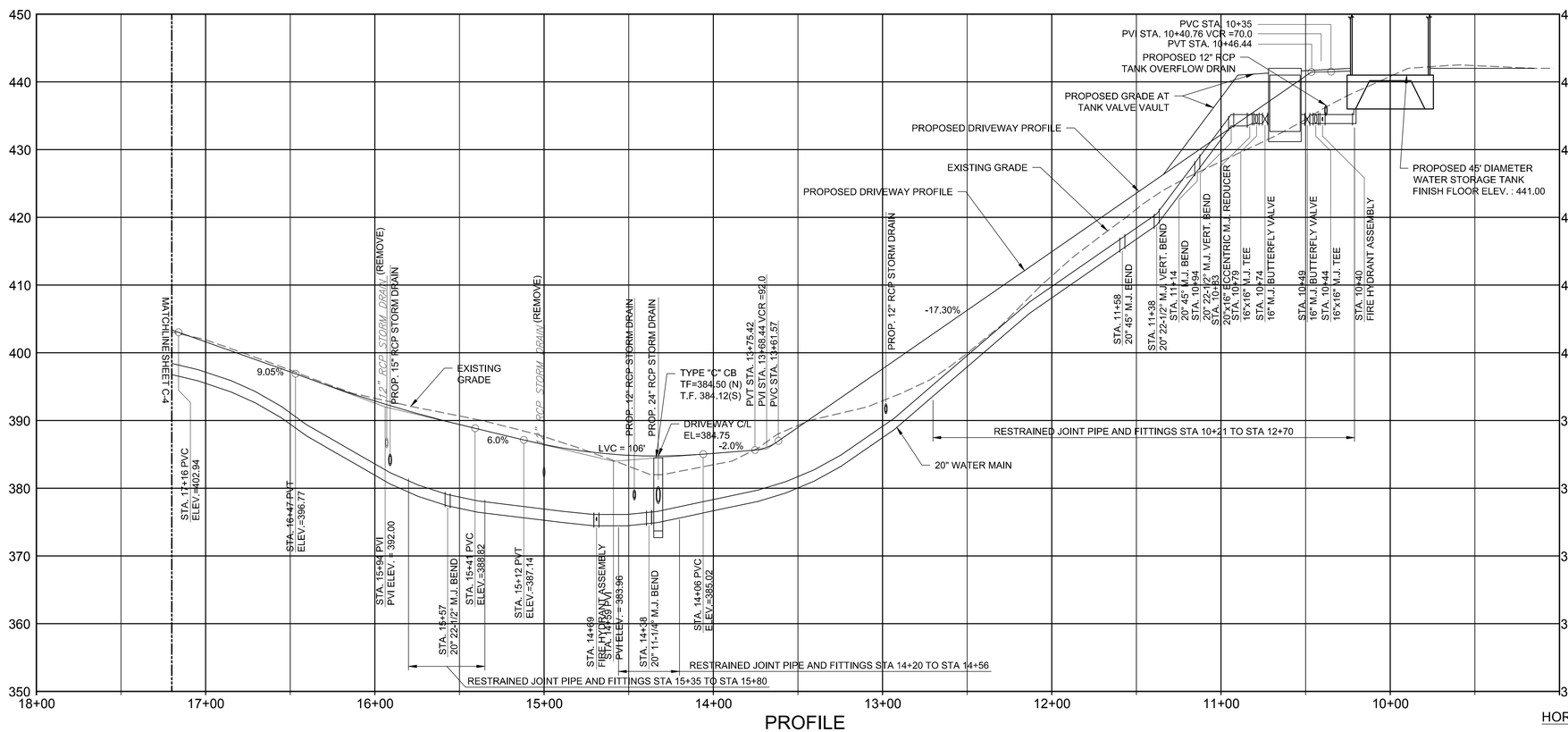

PROFILE

SCALES

HORIZONTAL: 0 40' 80' — 1" = 40'

VERTICAL: 0 10' 20' — 1" = 10'

MARK	DATE	MADE BY	CHECKED	DESCRIPTION
				100% SUBMITTAL

REVISIONS

AECOM, INC.
500 EAST MIDDLE DRIVE
ROCKY HILL, CT 06067
PHONE (860) 263-3600

EPA CONTRACT NO. EP-S1-06-01
DURHAM MEADOWS WATERLINE RD
DURHAM AND MIDDLETOWN, CONNECTICUT
TASK ORDER NO. 0060-RD-RD-01D5

CITY OF MIDDLETOWN

PLAN & PROFILE-TANK ACCESS DRIVEWAY

STA. 10+00 TP STA. 17+20

PROJECT NO:	60275749
CAD DWG FILE:	CZ-DUR-003
DESIGNED BY:	KPR
DRAWN BY:	KPR
DEPT CHECK:	GRS
PROJ CHECK:	RMB
DATE:	APRIL 2018
SCALE:	AS NOTED

C-3

ANSI D – 29-Jan-18

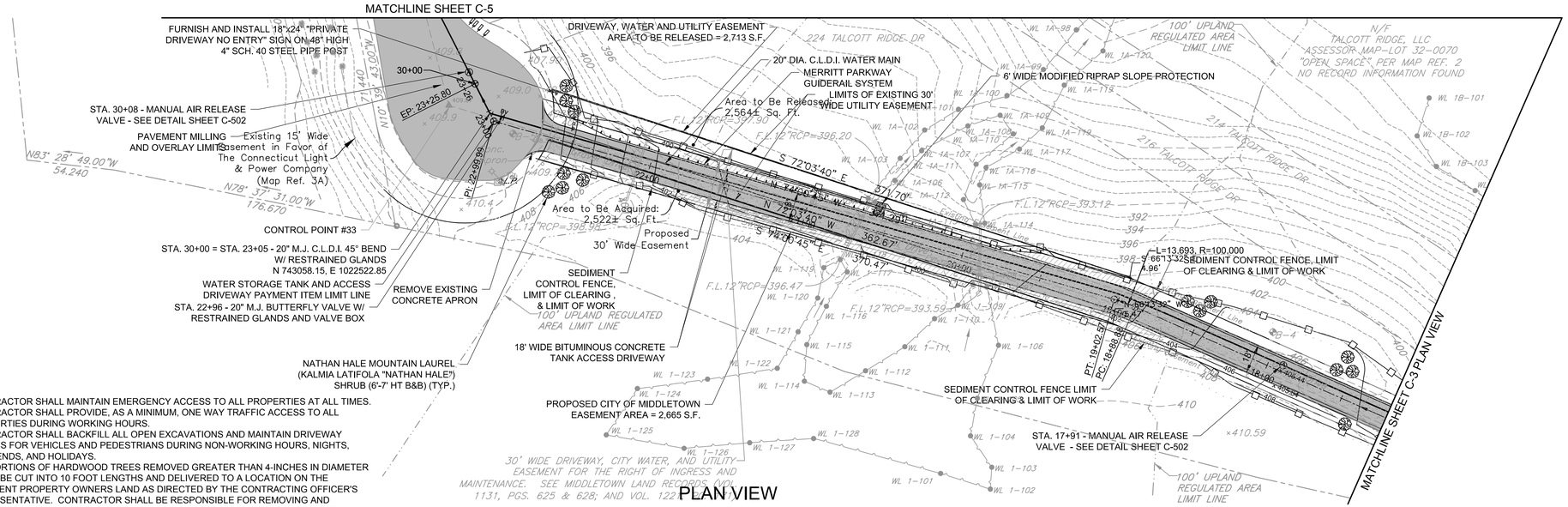

NOTES:

1. CONTRACTOR SHALL MAINTAIN EMERGENCY ACCESS TO ALL PROPERTIES AT ALL TIMES.
2. CONTRACTOR SHALL PROVIDE, AS A MINIMUM, ONE WAY TRAFFIC ACCESS TO ALL PROPERTIES DURING WORKING HOURS.
3. CONTRACTOR SHALL BACKFILL ALL OPEN EXCAVATIONS AND MAINTAIN DRIVEWAY ACCESS FOR VEHICLES AND PEDESTRIANS DURING NON-WORKING HOURS, NIGHTS, WEEKENDS, AND HOLIDAYS.
4. ALL PORTIONS OF HARDWOOD TREES REMOVED GREATER THAN 4-INCHES IN DIAMETER SHALL BE CUT INTO 10 FOOT LENGTHS AND DELIVERED TO A LOCATION ON THE ADJACENT PROPERTY OWNERS LAND AS DIRECTED BY THE CONTRACTING OFFICER'S REPRESENTATIVE. CONTRACTOR SHALL BE RESPONSIBLE FOR REMOVING AND DISPOSING OF ALL OTHER BRUSH, STUMPS, WOOD, ROOTS, AND OTHER CLEARED VEGETATION NOT RETAINED BY THE PROPERTY OWNERS.
5. RESIDENTS WITHIN 500 FEET OF THE WATER TANK AND ACCESS DRIVEWAY SHALL BE NOTIFIED 24 HOURS IN ADVANCE OF ALL PLANNED ACTIVITIES THAT WILL GENERATE LOUD NOISES OR LARGE VIBRATIONS.

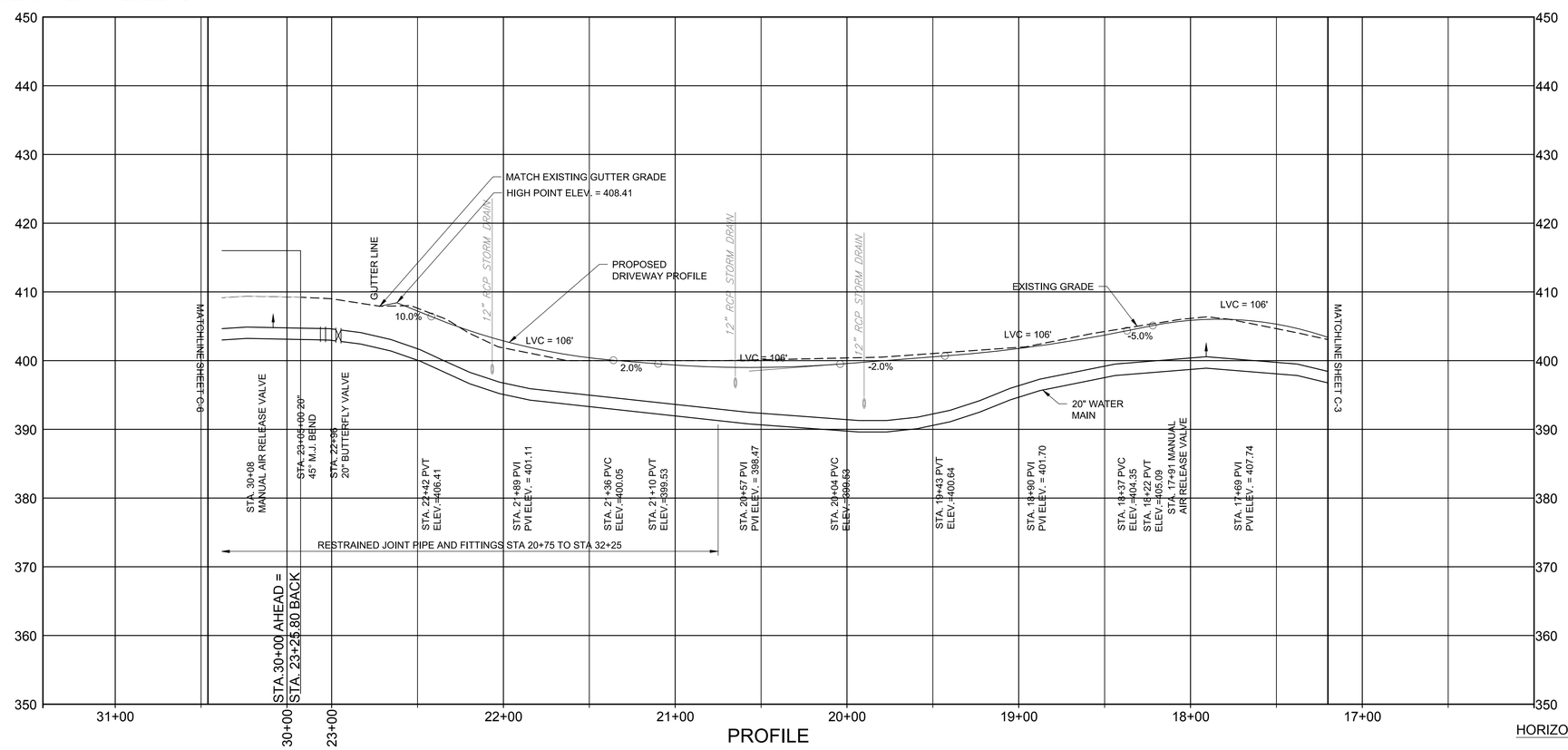

SCALES

HORIZONTAL: 0 40' 80' — 1" = 40'

VERTICAL: 0 10' 20' — 1" = 10'

MARK	DATE	MADE BY	CHECKED	DESCRIPTION
REV 1	JUL 2018	RB	RB	AMENDMENT 0005

REVISIONS

100% SUBMITTAL

AECOM, INC.
250 APPLE TREE DRIVE
ROCKY HILL, CT 06067
PHONE (860) 263-3800

EPA CONTRACT NO. EP-S1-06-01
DURHAM MEADOWS WATERLINE RD
DURHAM AND MIDDLETOWN, CONNECTICUT
TASK ORDER NO. 0060-RD-RD-01D5

CITY OF MIDDLETOWN
PLAN & PROFILE-TANK ACCESS DRIVEWAY
STA. 17+20 TO STA.30+46

PROJECT NO:	60275749
CAD DWG FILE:	CZ-DUR-004
DESIGNED BY:	KPR
DRAWN BY:	KPR
DEPT CHECK:	GRS
PROJ CHECK:	RMB
DATE:	APRIL 2018
SCALE:	AS NOTED

C-4

ANSI D – 24-Jul-18

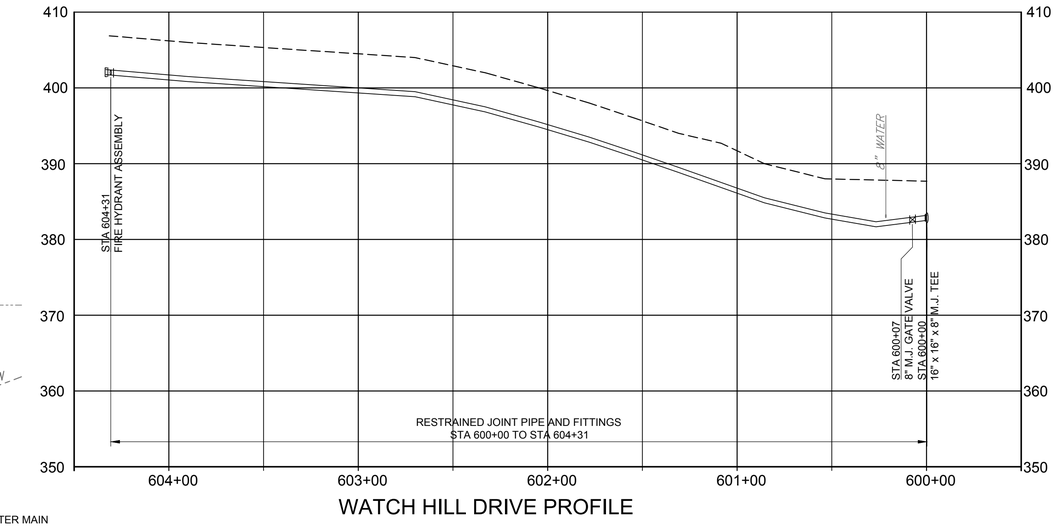

WATCH HILL DRIVE PROFILE

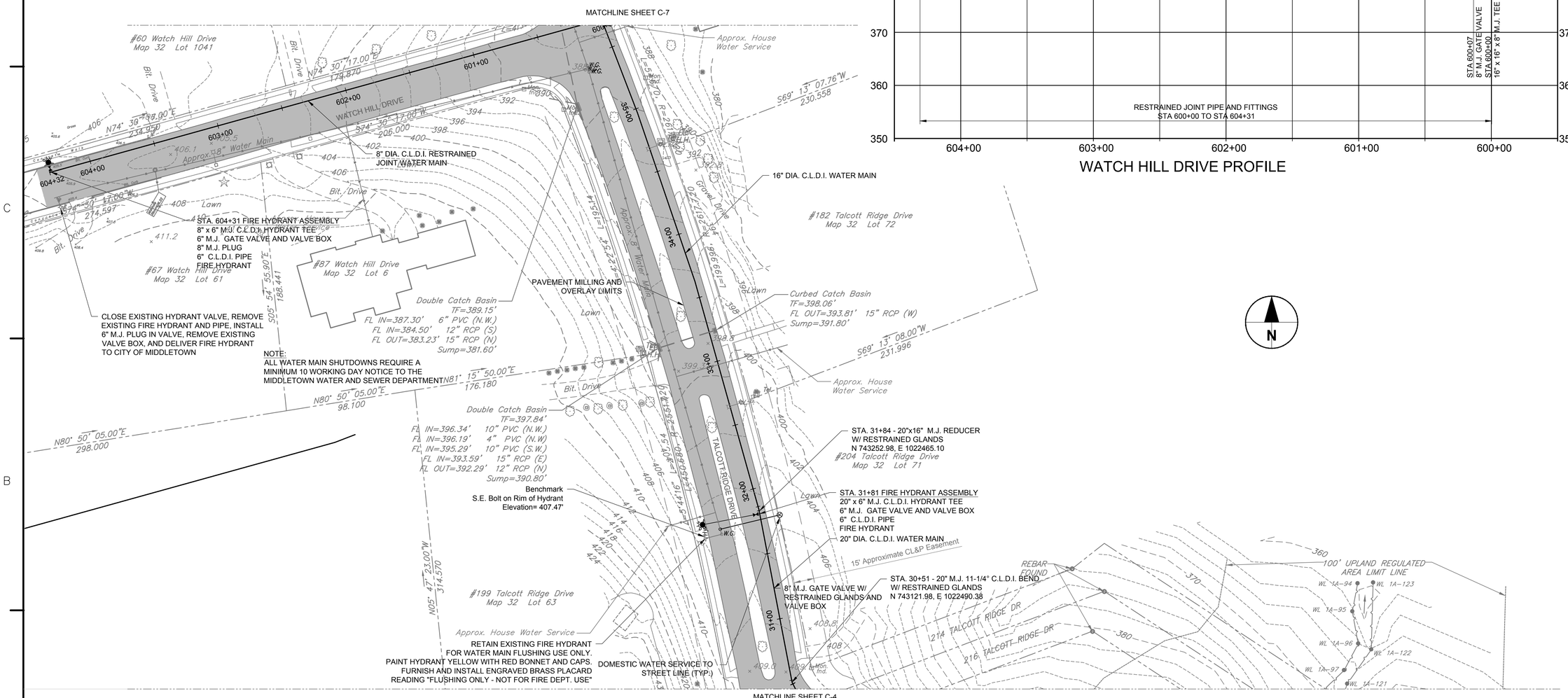

NOTES:

1. ALL EXISTING HYDRANTS SHALL BE REMOVED AND DELIVERED TO THE CITY OF MIDDLETOWN. CAP OR PLUG ALL EXISTING PIPE CONNECTIONS.
2. CONTRACTOR TO VERIFY LOCATIONS OF ALL EXISTING WATER SERVICES PRIOR TO CONSTRUCTION.
3. WATER SERVICE TO BE MAINTAINED TO CUSTOMERS AS MUCH AS POSSIBLE. WATER SERVICE INTERRUPTIONS, IF REQUIRED, SHALL NOT EXCEED 2 HOURS AND SHALL BE SCHEDULED IN WRITING AT LEAST 48 HOURS IN ADVANCE WITH THE AFFECTED CUSTOMER.

SCALES

HORIZONTAL 0 40' 80' — 1" = 40'

VERTICAL 0 10' 20' — 1" = 10'

MARK	DATE	MADE BY	CHECKED	DESCRIPTION
				100% SUBMITTAL

REVISIONS

AECOM, INC.
500 WOOD HOLLOW DRIVE
ROCKY HILL, CT 06067
PHONE (860) 263-3800

AECOM

EPA CONTRACT NO. EP-S1-06-01
DURHAM MEADOWS WATERLINE RD
DURHAM AND MIDDLETOWN, CONNECTICUT
TASK ORDER NO. 0060-RD-RD-0105

CITY OF MIDDLETOWN

PLAN - TALCOTT RIDGE DRIVE

STA. 30+46 TO STA. 35+68

PROJECT NO:	60275749
CAD DWG FILE:	CZ-DUR-005
DESIGNED BY:	KPR
DRAWN BY:	KPR
DEPT CHECK:	GRS
PROJ CHECK:	RMB
DATE:	APRIL 2018
SCALE:	AS NOTED

C-5

ANSI D – 3-May-18

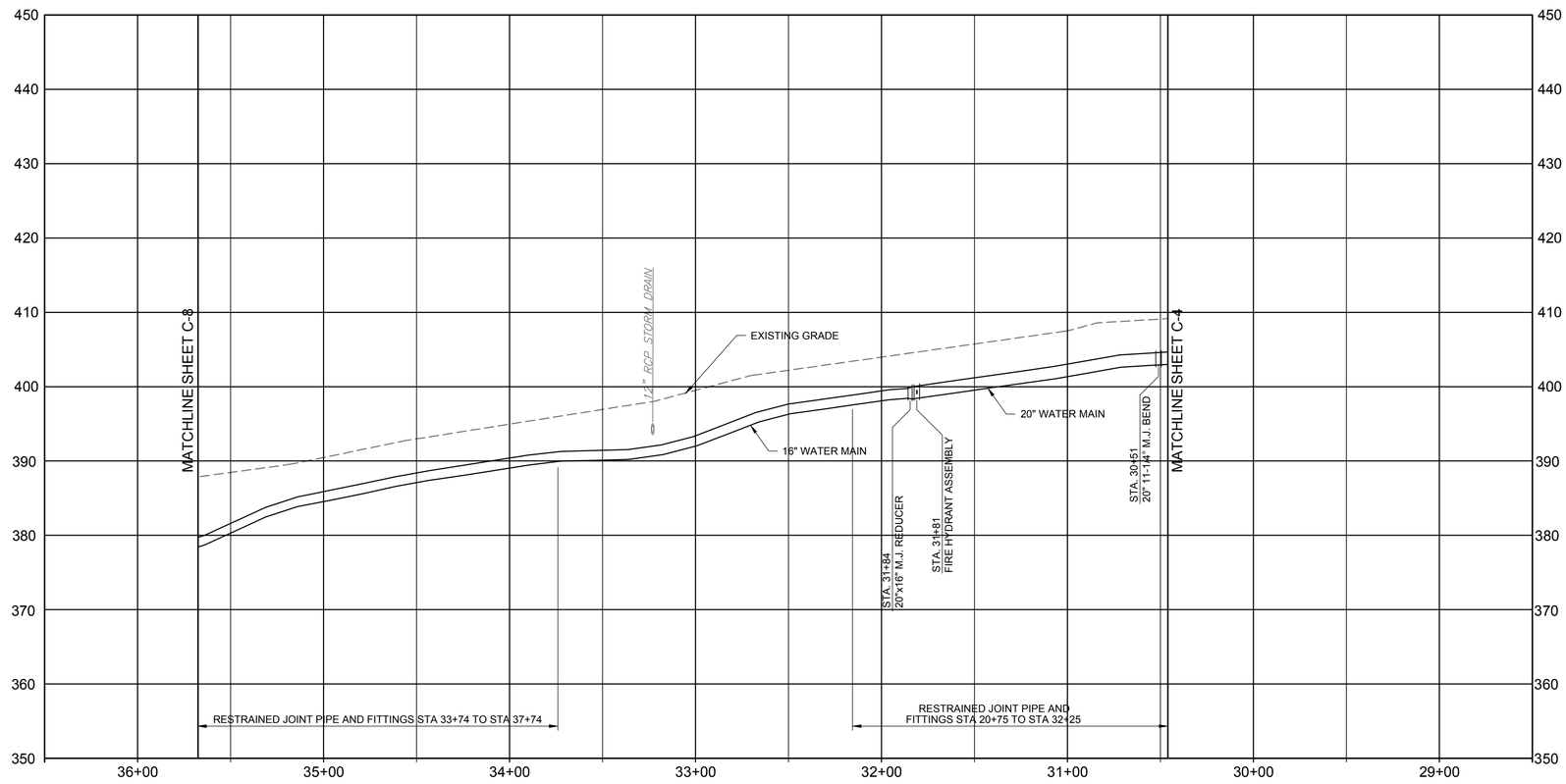

TALCOTT RIDGE DRIVE PROFILE VIEW

SCALES

HORIZONTAL 0 40' 80'
1" = 40'

VERTICAL 0 10' 20'
1" = 10'

MARK	DATE	MADE BY	CHECKED	DESCRIPTION
				100% SUBMITTAL

REVISIONS

AECOM, INC.
50 LA PLATA HOUSE DRIVE
ROCKY HILL, CT 06067
PHONE (860) 263-3000

EPA CONTRACT NO. EP-S1-06-01
DURHAM MEADOWS WATERLINE RD
DURHAM AND MIDDLETOWN, CONNECTICUT
TASK ORDER NO. 0060-RD-RD-0105

CITY OF MIDDLETOWN
PROFILE - TALCOTT RIDGE DRIVE
STA. 30+46 TO STA. 35+68

PROJECT NO: 60275749
CAD DWG FILE: CZ-DUR-006
DESIGNED BY: KPR
DRAWN BY: KPR
DEPT CHECK: GRS
PROJ CHECK: MWM
DATE: APRIL 2018
SCALE: AS NOTED

C-6

ANSI D – 5-Feb-18

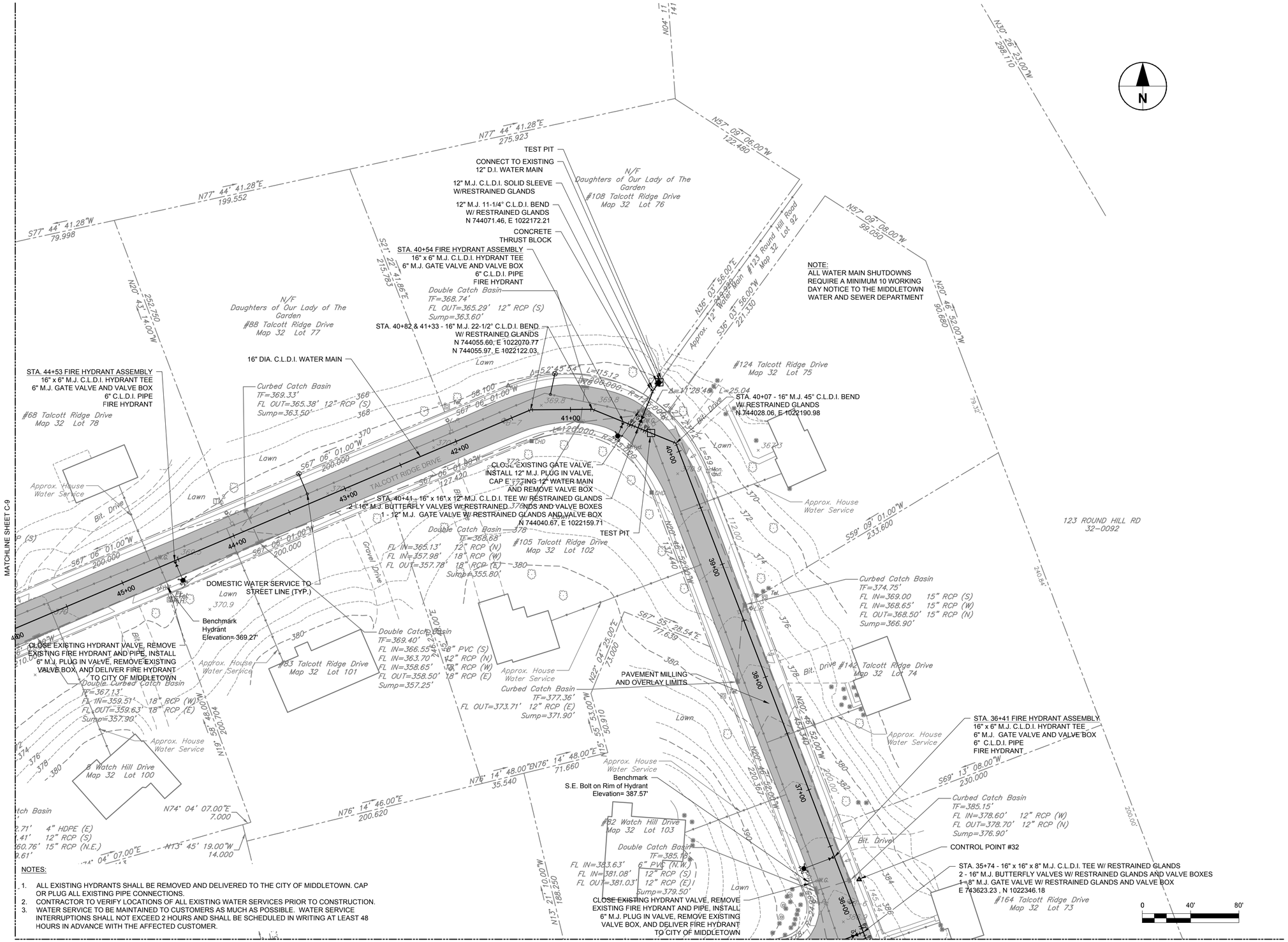

NOTE:
ALL WATER MAIN SHUTDOWNS REQUIRE A MINIMUM 10 WORKING DAY NOTICE TO THE MIDDLETOWN WATER AND SEWER DEPARTMENT

NOTES:

1. ALL EXISTING HYDRANTS SHALL BE REMOVED AND DELIVERED TO THE CITY OF MIDDLETOWN. CAP OR PLUG ALL EXISTING PIPE CONNECTIONS.
2. CONTRACTOR TO VERIFY LOCATIONS OF ALL EXISTING WATER SERVICES PRIOR TO CONSTRUCTION.
3. WATER SERVICE TO BE MAINTAINED TO CUSTOMERS AS MUCH AS POSSIBLE. WATER SERVICE INTERRUPTIONS SHALL NOT EXCEED 2 HOURS AND SHALL BE SCHEDULED IN WRITING AT LEAST 48 HOURS IN ADVANCE WITH THE AFFECTED CUSTOMER.

MARK	DATE	MADE BY	CHECKED	DESCRIPTION
				100% SUBMITTAL

REVISIONS

AECOM
AECOM, INC.
500 NORTH MAIN STREET, SUITE 200
ROCKY HILL, CT 06067
PHONE (860) 263-3000

EPA CONTRACT NO. EP-S1-06-01
DURHAM MEADOWS WATERLINE RD
DURHAM AND MIDDLETOWN, CONNECTICUT
TASK ORDER NO. 0060-RD-RD-01D5

CITY OF MIDDLETOWN
PLAN - TALCOTT RIDGE DRIVE
STA. 35+68 TO STA. 45+97

PROJECT NO:	60275749
CAD DWG FILE:	CZ-DUR-007
DESIGNED BY:	KPR
DRAWN BY:	KPR
DEPT CHECK:	GRS
PROJ CHECK:	RMB
DATE:	APRIL 2018
SCALE:	AS NOTED

C-7

ANSI D – 29-Jan-18

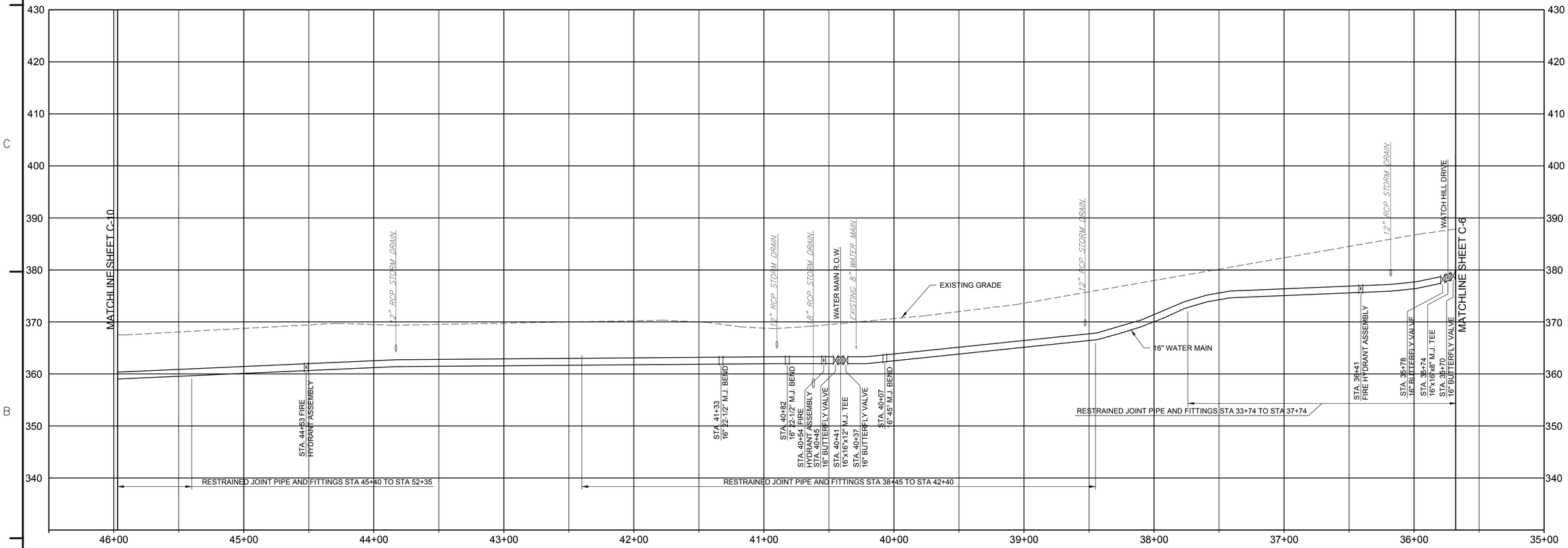

TALCOTT RIDGE DRIVE PROFILE VIEW

SCALES

HORIZONTAL 0 40' 80' 1" = 40'

VERTICAL 0 10' 20' 1" = 10'

MARK	DATE	MADE BY	CHECKED	DESCRIPTION
				100% SUBMITTAL

REVISIONS

AECOM, INC.
500 WINDSOR DRIVE
ROCKY HILL, CT 06067
PHONE (860) 263-3000

AECOM

EPA CONTRACT NO. EP-S1-06-01
DURHAM MEADOWS WATERLINE RD.
DURHAM AND MIDDLETOWN, CONNECTICUT
TASK ORDER NO. 0060-RD-RD-01D5

CITY OF MIDDLETOWN

PROFILE - TALCOTT RIDGE DRIVE

STA. 35+68 TO STA. 45+97

PROJECT NO:	60275749
CAD DWG FILE:	CZ-DUR-008
DESIGNED BY:	KPR
DRAWN BY:	KPR
DEPT CHECK:	GRS
PROJ CHECK:	MWM
DATE:	APRIL 2018
SCALE:	AS NOTED

C-8

ANSI D – 5-Feb-18

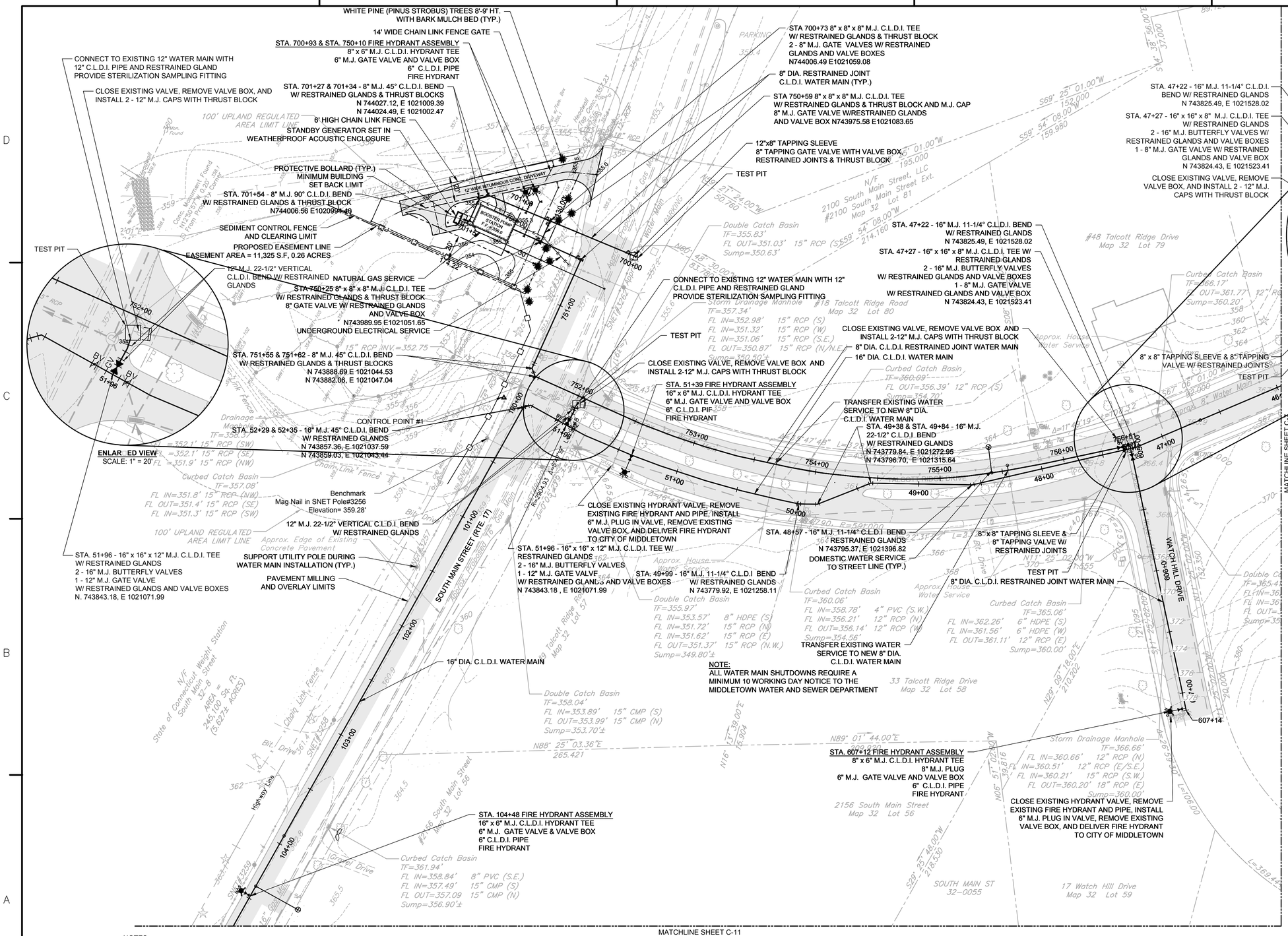

NOTES:

1. ALL EXISTING HYDRANTS SHALL BE REMOVED AND DELIVERED TO THE CITY OF MIDDLETOWN. CAP OR PLUG ALL EXISTING PIPE CONNECTIONS.
2. CONTRACTOR TO VERIFY LOCATIONS OF ALL EXISTING WATER SERVICES PRIOR TO CONSTRUCTION.
3. WATER SERVICE TO BE MAINTAINED TO CUSTOMERS AS MUCH AS POSSIBLE. WATER SERVICE INTERRUPTIONS, IF REQUIRED, SHALL NOT EXCEED 2 HOURS AND SHALL BE SCHEDULED IN WRITING AT LEAST 48 HOURS IN ADVANCE WITH THE AFFECTED WATER CUSTOMER.
4. REFER TO DRAWING M-113 FOR TALCOTT RIDGE BOOSTER STATION DETAILS AND PAYMENT LIMITS.
5. REFER TO DRAWING C-46 FOR TALCOTT RIDGE BOOSTER STATION SUCTION AND DISCHARGE WATER MAIN PROFILES.
6. REFER TO DRAWING C-47 FOR TALCOTT RIDGE BOOSTER STATION ENLARGED PLAN.

SCALE: 1" = 40'

0 40' 80'

100% SUBMITTAL

MARK	DATE	MADE BY	CHECKED	DESCRIPTION

REVISIONS

AECOM, INC.
AECOM, INC. 250 APPROACH DRIVE
ROCKY HILL, CT 06067
PHONE (860) 263-3800

AECOM

EPA CONTRACT NO. EP-S1-06-01
DURHAM MEADOWS WATERLINE RD
DURHAM AND MIDDLETOWN, CONNECTICUT
TASK ORDER NO. 0060-RD-RD-0105

CITY OF MIDDLETOWN

PLAN - SOUTH MAIN STREET (ROUTE 17)

STA. 45+97 TO STA. 52+35 & STA. 100+00 TO STA. 104+76

PROJECT NO:	60275749
CAD DWG FILE:	CZ-DUR-009
DESIGNED BY:	KPR
DRAWN BY:	KPR
DEPT CHECK:	GRS
PROJ CHECK:	RMB
DATE:	APRIL 2018
SCALE:	AS NOTED

C-9

ANSI D – 4-May-18

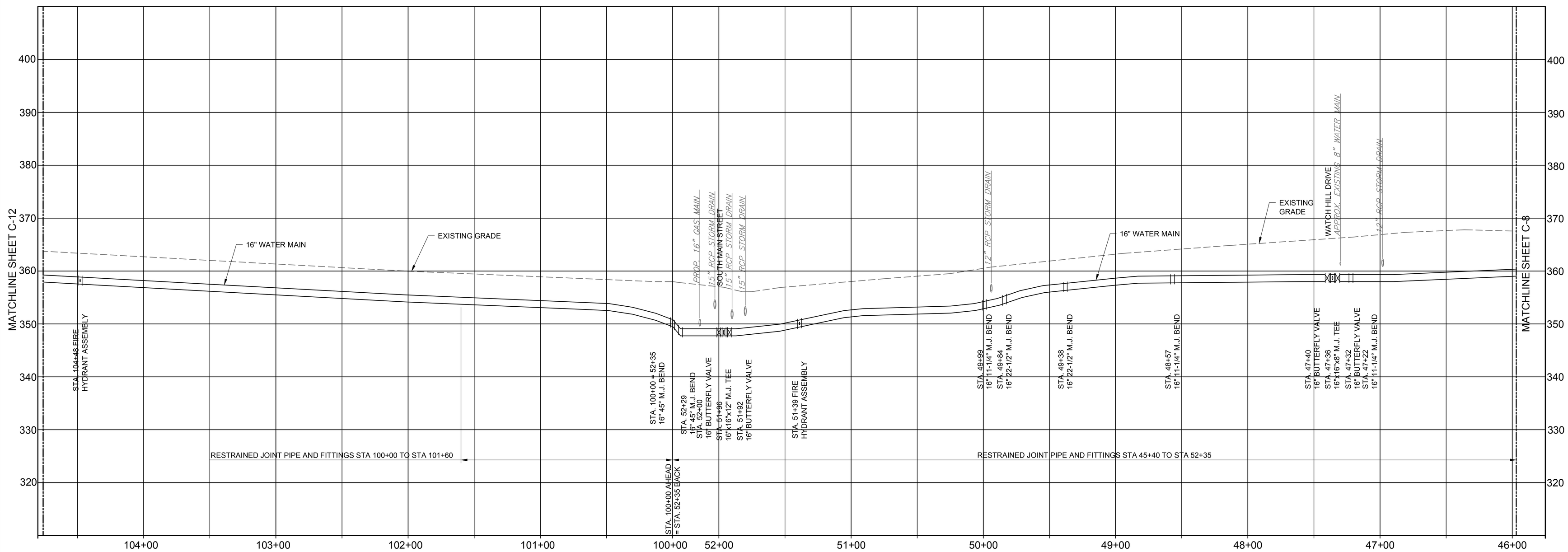

TALCOTT RIDGE DRIVE AND SOUTH MAIN STREET (ROUTE 17)

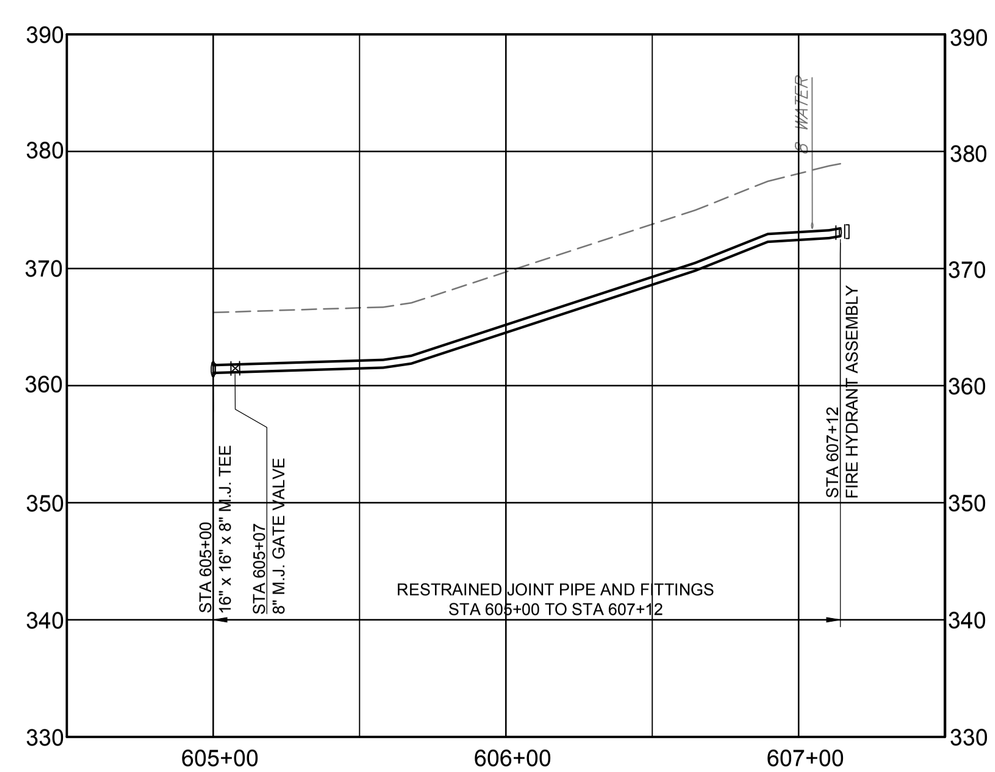

WATCH HILL DRIVE PROFILE

SCALES

HORIZONTAL 0 40' 80' 1" = 40'

VERTICAL 0 10' 20' 1" = 10'

MARK	DATE	MADE BY	CHECKED	DESCRIPTION
				100% SUBMITTAL

REVISIONS

AECOM, INC.
250 APPROACH DRIVE
ROCKY HILL, CT 06067
PHONE (860) 263-3800

AECOM

EPA CONTRACT NO. EP-S1-06-01
DURHAM MEADOWS WATERLINE RD
DURHAM AND MIDDLETOWN, CONNECTICUT
TASK ORDER NO. 0060-RD-RD-01D5

CITY OF MIDDLETOWN

PROFILE - SOUTH MAIN STREET (ROUTE 17)

STA. 45+97 TO STA. 52+35 & STA. 100+00 TO STA. 104+76

PROJECT NO:	60275749
CAD DWG FILE:	CZ-DUR-010
DESIGNED BY:	KPR
DRAWN BY:	KPR
DEPT CHECK:	GRS
PROJ CHECK:	MWM
DATE:	APRIL 2018
SCALE:	AS NOTED

C-10

ANSI D – 2-May-18

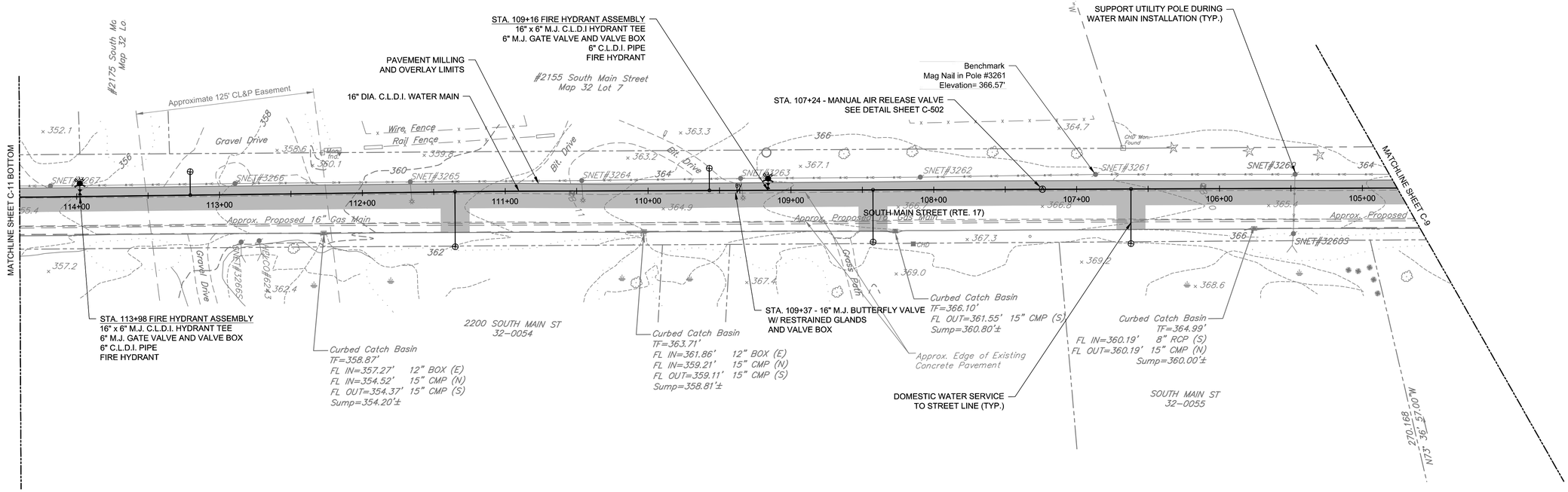

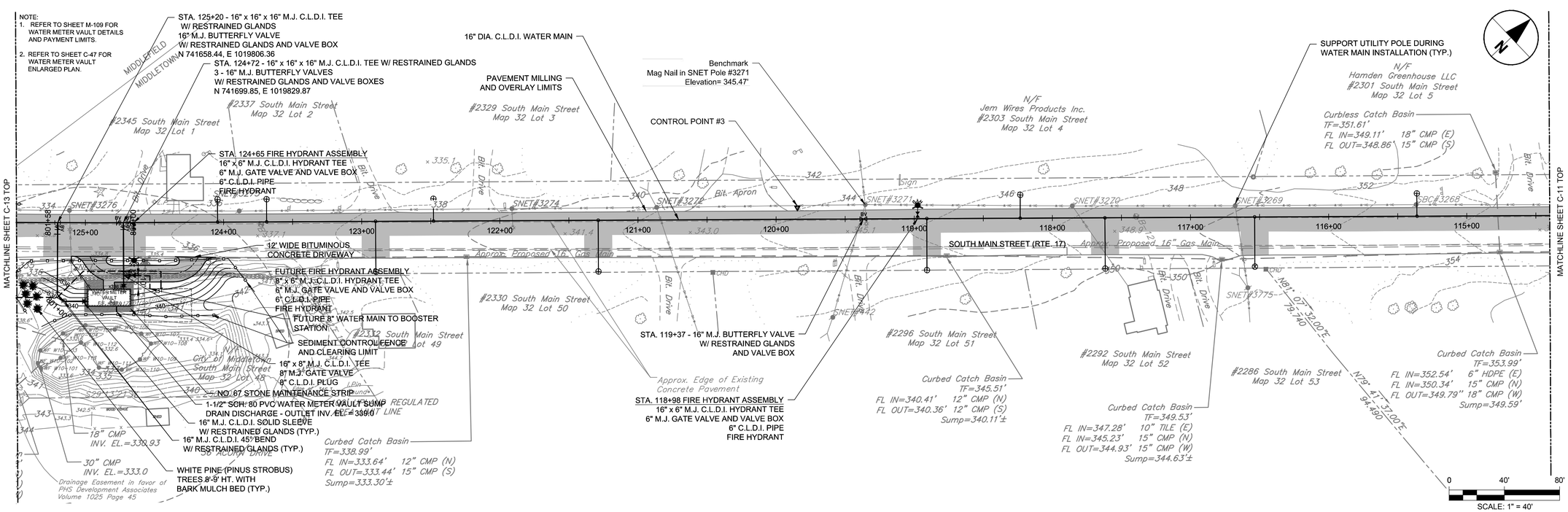

MARK	DATE	MADE BY	CHECKED	DESCRIPTION
				100% SUBMITTAL

REVISIONS

AECOM
AECOM, INC.
50 MYRTLE ORCHARD DRIVE
ROCKY HILL, CT 06067
PHONE (860) 263-3000

EPA CONTRACT NO. EP-S1-06-01
DURHAM MEADOWS WATERLINE RD
DURHAM AND MIDDLETOWN, CONNECTICUT
TASK ORDER NO. 0060-RD-RD-01D5

CITY OF MIDDLETOWN

PLAN - SOUTH MAIN STREET (ROUTE 17)

STA. 104+76 TO STA. 125+50

PROJECT NO:	60275749
CAD DWG FILE:	CZ-DUR-011
DESIGNED BY:	KPR
DRAWN BY:	KPR
DEPT CHECK:	GRS
PROJ CHECK:	RMB
DATE:	APRIL 2018
SCALE:	AS NOTED

C-11

ANSI D — 4-Apr-18

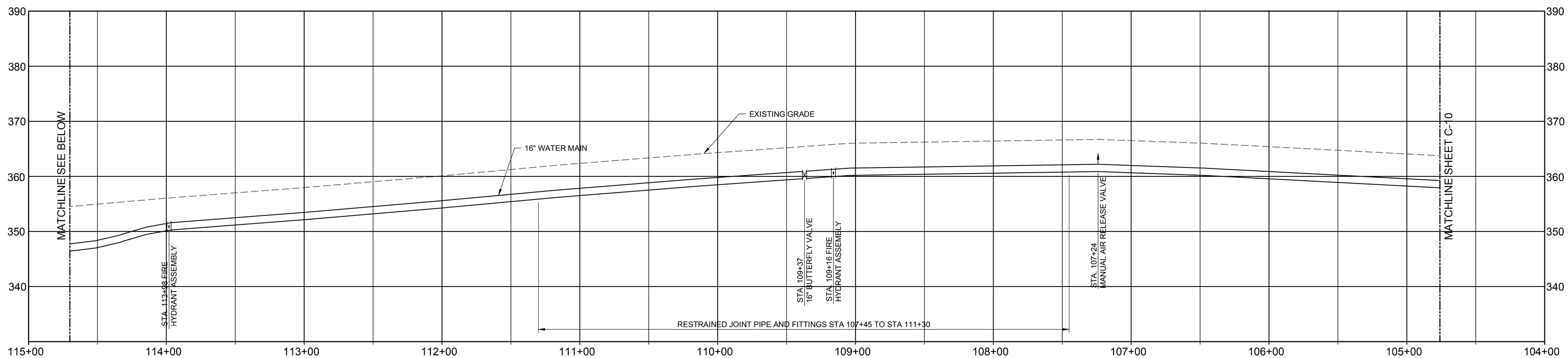

SOUTH MAIN STREET (ROUTE 17)PROFILE

STA. 104+76 TO STA. 114+70

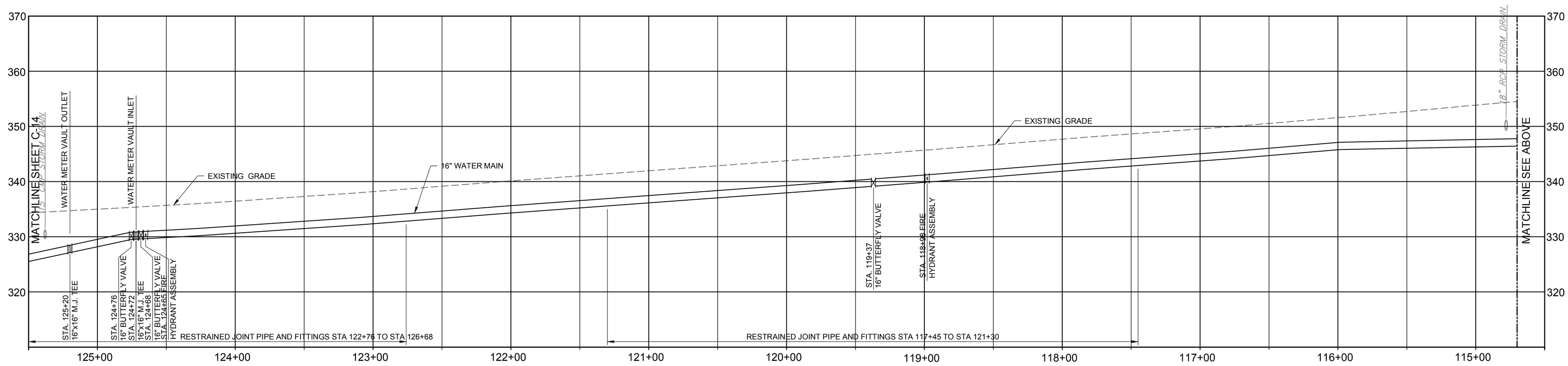

SOUTH MAIN STREET (ROUTE 17) PROFILE

STA. 114+70 TO 125+50

SCALES

HORIZONTAL 0 40' 80' 1" = 40'

VERTICAL 0 10' 20' 1" = 10'

MARK	DATE	MADE BY	CHECKED	DESCRIPTION
				100% SUBMITTAL

REVISIONS

AECOM

AECOM, INC.
500 NORTH MAIN STREET
ROCKY HILL, CT 06067
PHONE (860) 263-3000

EPA CONTRACT NO. EP-S1-06-01
DURHAM MEADOWS WATERLINE RD
DURHAM AND MIDDLETOWN, CONNECTICUT
TASK ORDER NO. 0060-RD-RD-01D5

CITY OF MIDDLETOWN

PROFILE - SOUTH MAIN STREET (ROUTE 17)

STA. 104+76 TO STA.125+50

PROJECT NO:	60275749
CAD DWG FILE:	CZ-DUR-012
DESIGNED BY:	KPR
DRAWN BY:	KPR
DEPT CHECK:	GRS
PROJ CHECK:	MWM
DATE:	APRIL 2018
SCALE:	AS NOTED

C-12

ANSI D – 29-Jan-18

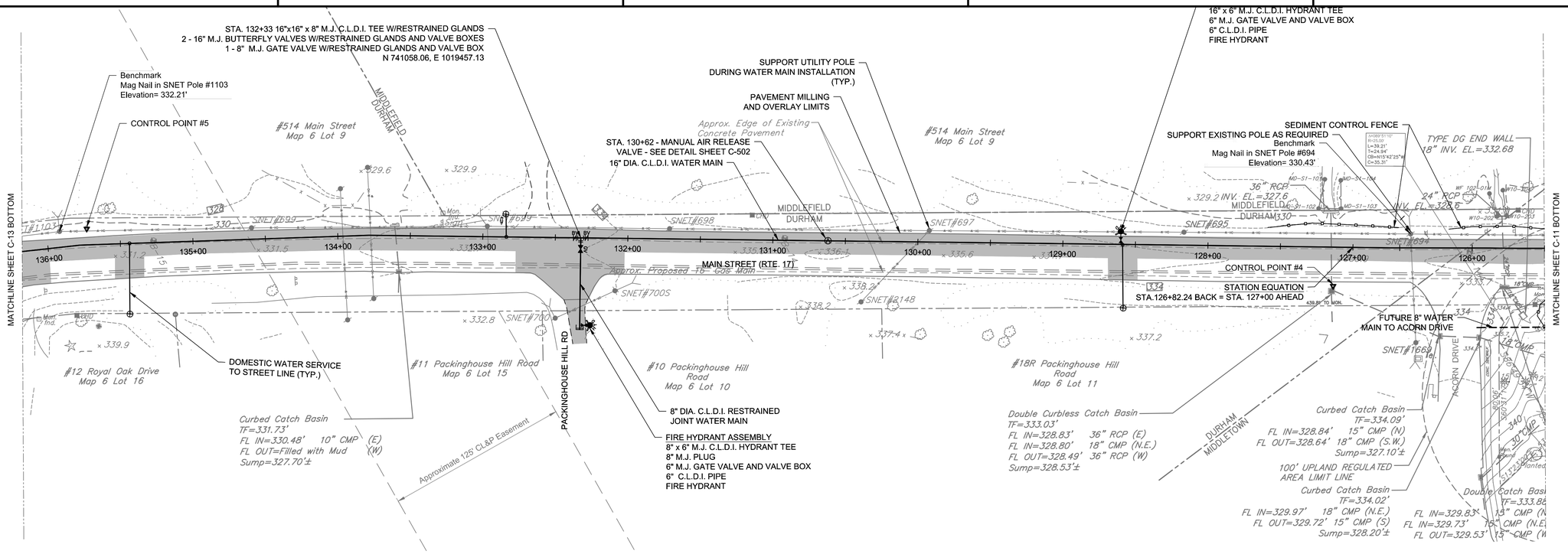

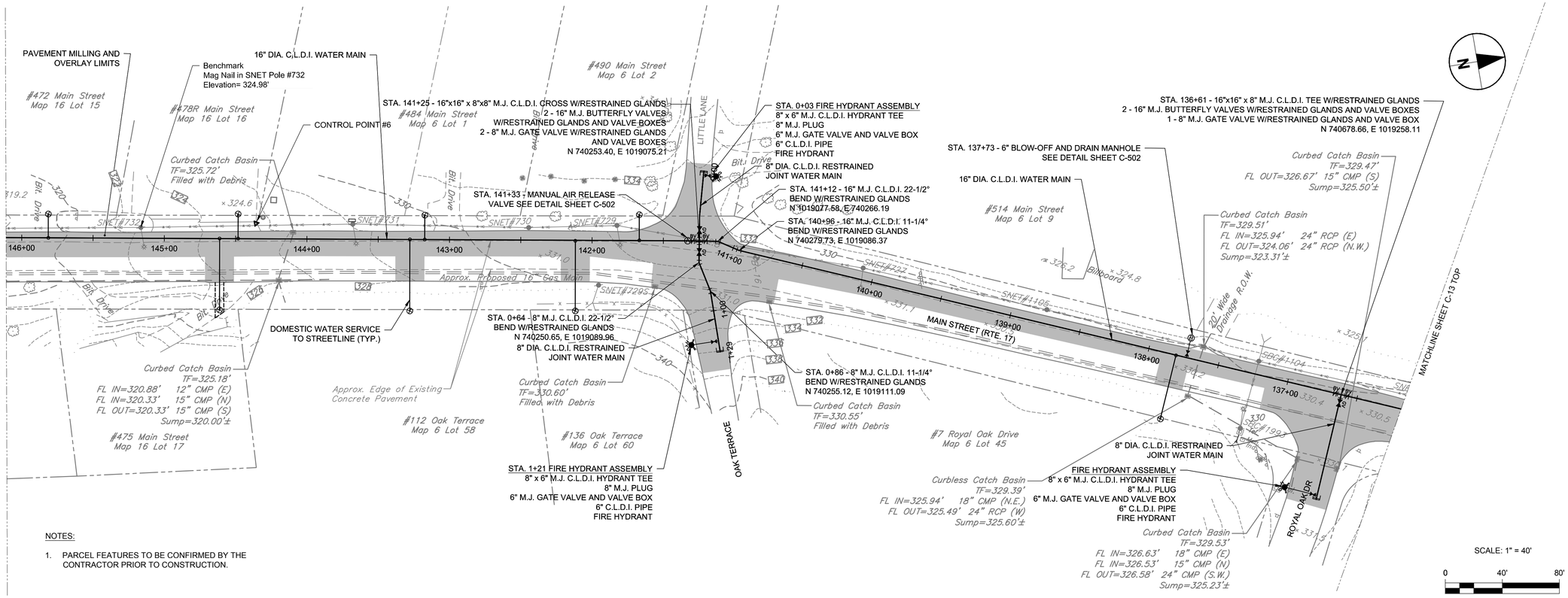

NOTES:

1. PARCEL FEATURES TO BE CONFIRMED BY THE CONTRACTOR PRIOR TO CONSTRUCTION.

SCALE: 1" = 40'

0 40' 80'

MARK	DATE	MADE BY	CHECKED	DESCRIPTION

REVISIONS

100% SUBMITTAL

AECOM
AECOM, INC.
100 CONGRESS DRIVE
ROCKY HILL, CT 06067
PHONE (860) 263-3000

EPA CONTRACT NO. EP-S1-06-01
DURHAM MEADOWS WATERLINE RD
DURHAM AND MIDDLETOWN, CONNECTICUT
TASK ORDER NO. 0060-RD-RD-01D5

TOWN OF DURHAM

PLAN - MAIN STREET (ROUTE 17)

STA. 125+50 TO STA. 146+11

PROJECT NO:	60275749
CAD DWG FILE:	CZ-DUR-013
DESIGNED BY:	KPR
DRAWN BY:	KPR
DEPT CHECK:	GRS
PROJ CHECK:	RMB
DATE:	APRIL 2018
SCALE:	AS NOTED

C-13

ANSI D – 22-Mar-18

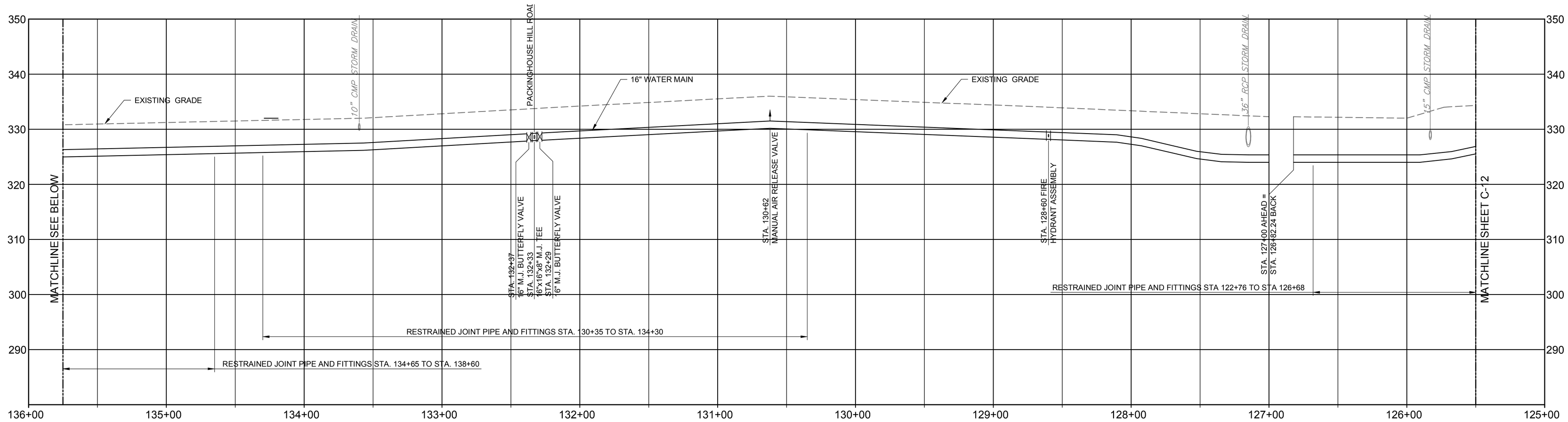

MAIN STREET (ROUTE 17)PROFILE

STA. 125+50 TO STA. 135+75

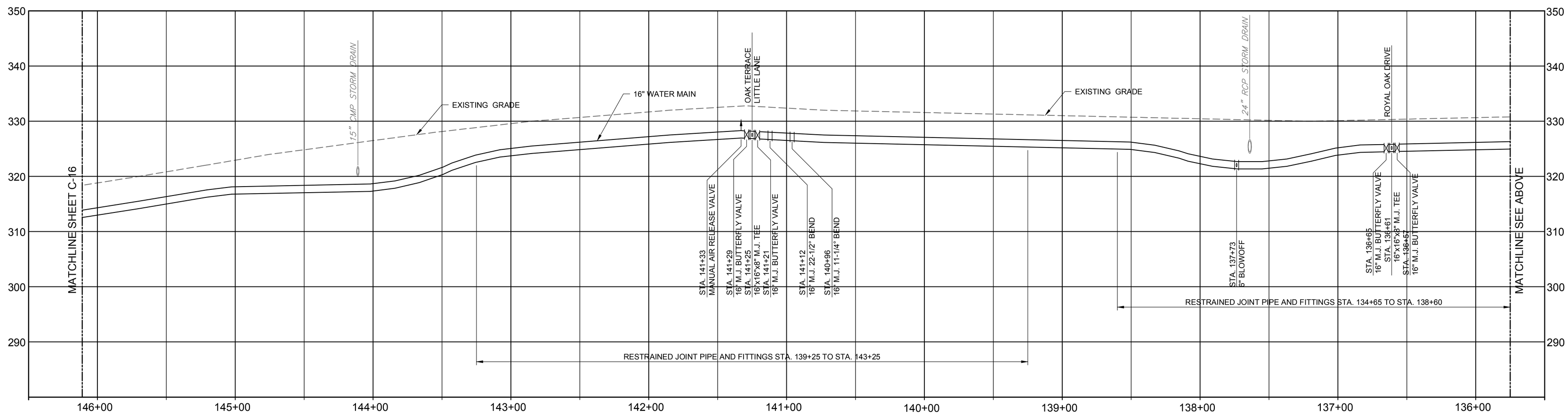

MAIN STREET (ROUTE 17) PROFILE

STA. 135+75 TO STA. 146+11

SCALES

HORIZONTAL 0 40' 80' 1" = 40'

VERTICAL 0 10' 20' 1" = 10'

MARK	DATE	MADE BY	CHECKED	DESCRIPTION
				100% SUBMITTAL

REVISIONS

AECOM, INC.
50 MYRTLE ROSE DRIVE
ROCKY HILL, CT 06067
PHONE (860) 263-3000

EPA CONTRACT NO. EP-S1-06-01
DURHAM MEADOWS WATERLINE RD
DURHAM AND MIDDLETOWN, CONNECTICUT
TASK ORDER NO. 0060-RD-RD-01D5

TOWN OF DURHAM

PROFILE - MAIN STREET (ROUTE 17)

STA. 125+50 TO STA.146+11

PROJECT NO:	60275749
CAD DWG FILE:	CZ-DUR-014
DESIGNED BY:	KPR
DRAWN BY:	KPR
DEPT CHECK:	GRS
PROJ CHECK:	MWM
DATE:	APRIL 2018
SCALE:	AS NOTED

C-14

ANSI D – 29-Jan-18

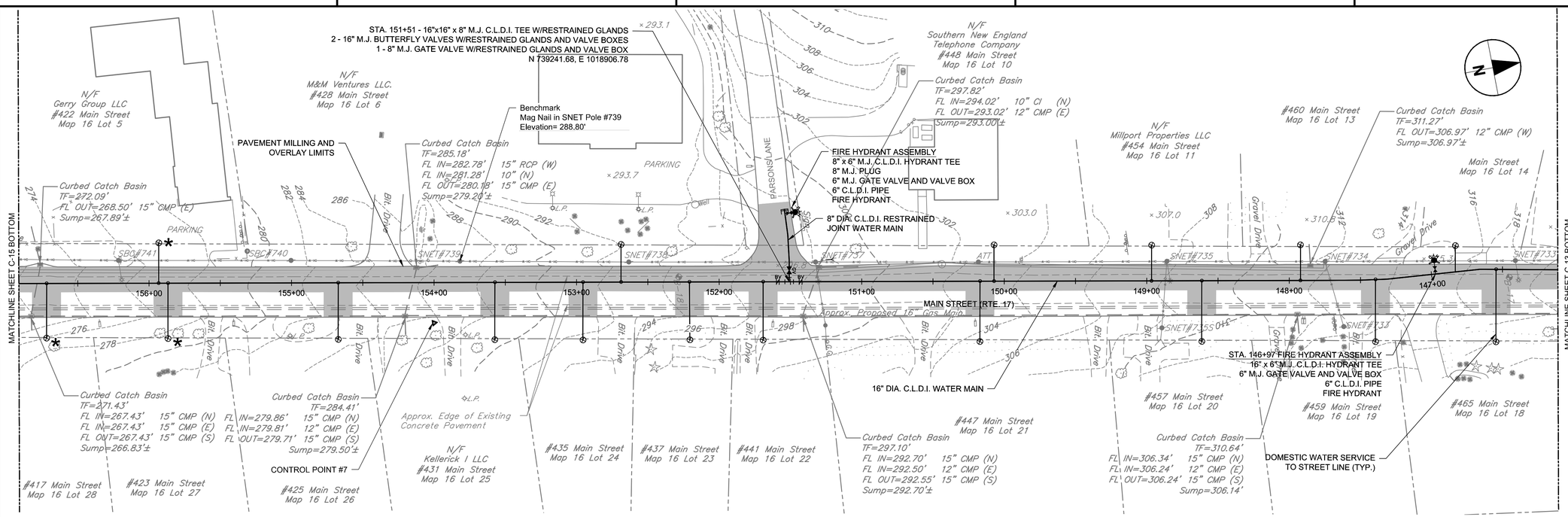

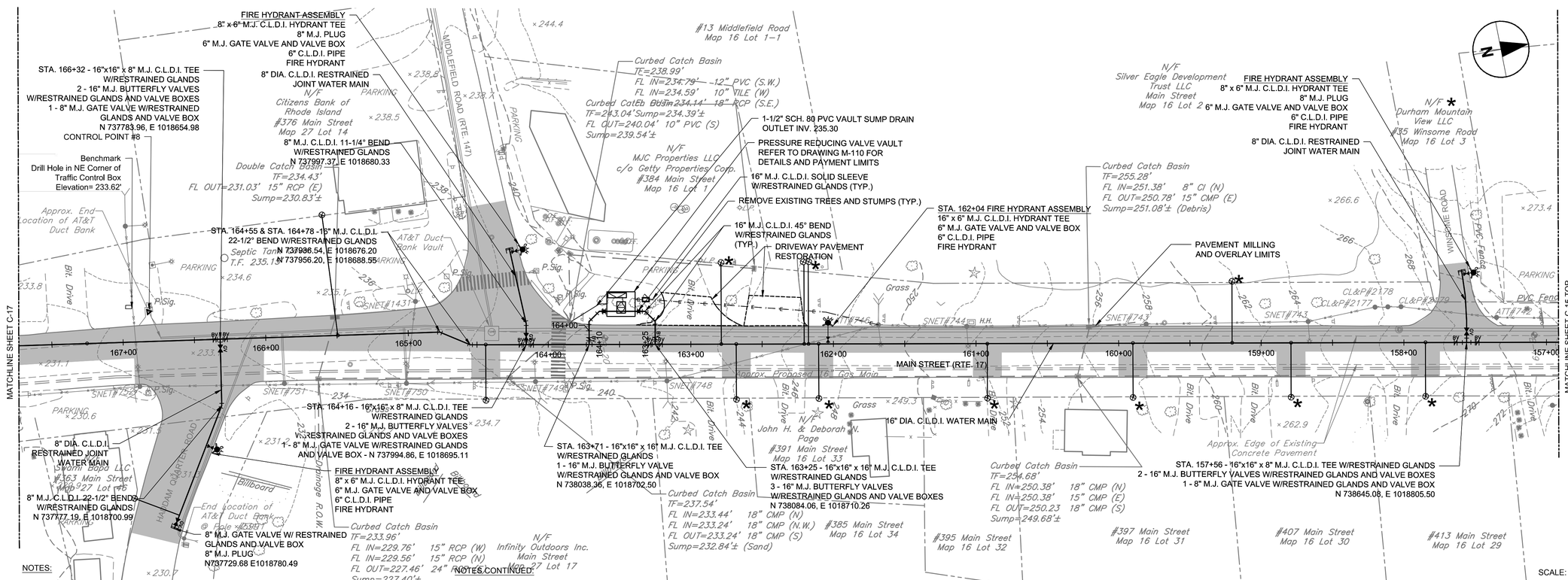

NOTES:

1. CONTRACTOR TO VERIFY LOCATION OF EXISTING SEPTIC SYSTEMS PRIOR TO INSTALLATION OF PROPOSED WATER SERVICES. MAINTAIN ALL REQUIRED SEPARATION DISTANCES.
2. PARCEL FEATURES TO BE CONFIRMED BY THE CONTRACTOR PRIOR TO CONSTRUCTION.
3. LOCATION OF AT&T DUCT BANK TO BE CONFIRMED BY CONTRACTOR PRIOR TO CONSTRUCTION.

NOTES CONTINUED:

4. ALL TRAFFIC SIGNALS SHALL REMAIN OPERATIONAL DURING CONSTRUCTION. ALL TRAFFIC SIGNAL LOOP DETECTORS MUST BE REPAIRED WITHIN 24 HOURS OF BEING DAMAGED OR DISTURBED.
5. WATER SERVICE PIPES CROSSING UNDER SIDEWALKS ARE TO BE INSTALLED BY EARTH PIERCING ("HOLE HAWG") TRENCHLESS METHODS SO AS NOT TO DISTURB THE EXISTING SIDEWALKS.
6. * - PRESSURE REDUCING VALVE REQUIRED FOR THESE WATER SERVICES WHEN CONNECTED TO A BUILDING AND PLACED IN SERVICE

SCALE: 1" = 40'

0 40' 80'

MARK	DATE	MADE BY	CHECKED	DESCRIPTION
				100% SUBMITTAL

REVISIONS

AECOM
AECOM, INC. HOUSE DRIVE
ROCKY HILL, CT 06067
PHONE (860) 263-3000

EPA CONTRACT NO. EP-S1-06-01
DURHAM MEADOWS WATERLINE RD
DURHAM AND MIDDLETOWN, CONNECTICUT
TASK ORDER NO. 0060-RD-RD-01D5

TOWN OF DURHAM

PLAN - MAIN STREET (ROUTE 17)

STA. 146+11 TO 167+73

PROJECT NO:	60275749
CAD DWG FILE:	CZ-DUR-015
DESIGNED BY:	KPR
DRAWN BY:	KPR
DEPT CHECK:	GRS
PROJ CHECK:	RMB
DATE:	APRIL 2018
SCALE:	AS NOTED

C-15

ANSI D – 22-Mar-18

ANSI D – 29-Jan-18

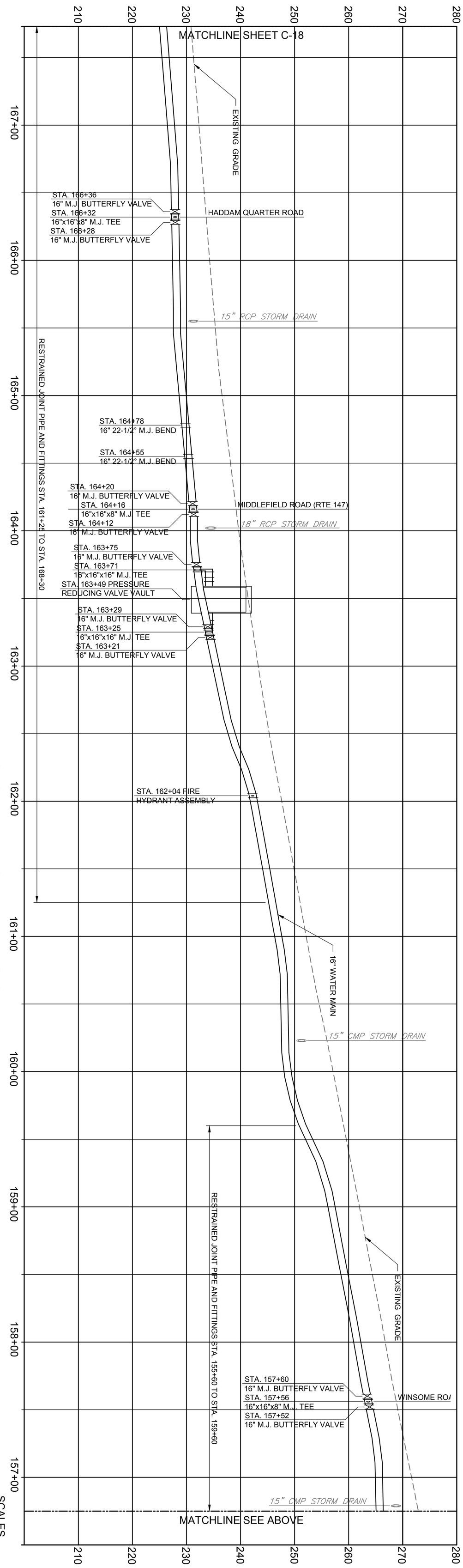

MAIN STREET (ROUTE 17) PROFILE

STA. 156+75 TO STA. 167+73

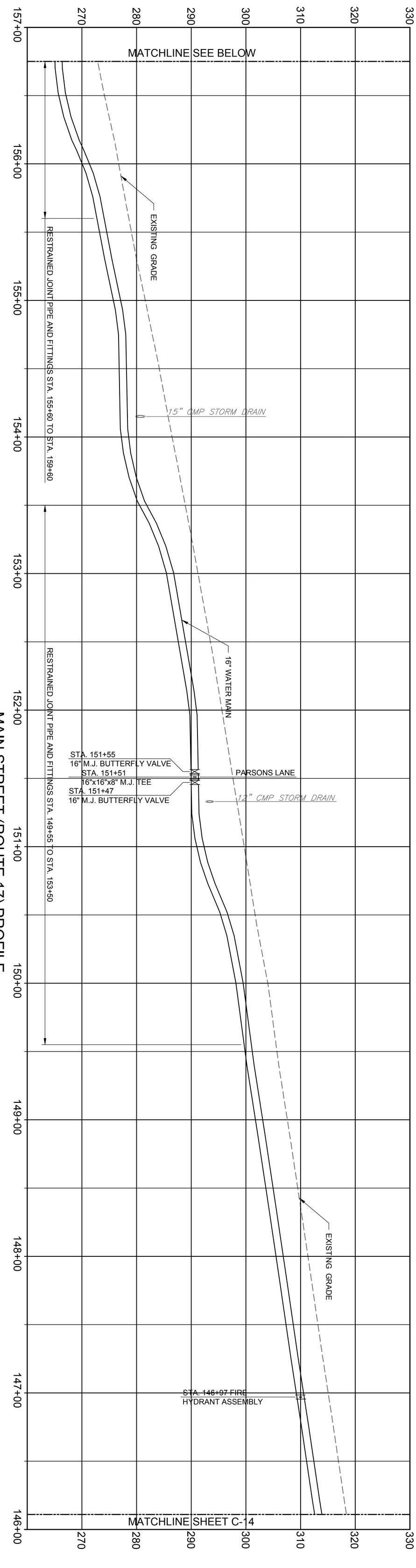

MAIN STREET (ROUTE 17) PROFILE

STA. 146+11 TO STA. 156+75

SCALES

HORIZONTAL: 1" = 40' (0, 40', 80')

VERTICAL: 1" = 10' (0, 10', 20')

EPA CONTRACT NO. EP-S1-06-01
DURHAM MEADOWS WATERLINE RD
DURHAM AND MIDDLETOWN, CONNECTICUT
TASK ORDER NO. 0060-RD-RD-01D5

TOWN OF DURHAM

PROFILE - MAIN STREET (ROUTE 17)

STA. 146+11 TO STA.167+73

PROJECT NO: 60275749
CAD DWG FILE: CZ-DUR-016
DESIGNED BY: KPR
DRAWN BY: KPR
DEPT CHECK: GRS
PROJ CHECK: MWM
DATE: APRIL 2018
SCALE: AS NOTED

C-16

STATE OF CONNECTICUT · DENNIS G. SETZER · No. 12027 · LICENSED PROFESSIONAL ENGINEER

AECOM

AECOM, INC.
500 ENTERPRISE DRIVE
ROCKY HILL, CT 06067
PHONE (860) 263-5800

MARK	DATE	MADE BY	CHECKED	DESCRIPTION
				100% SUBMITTAL

REVISIONS

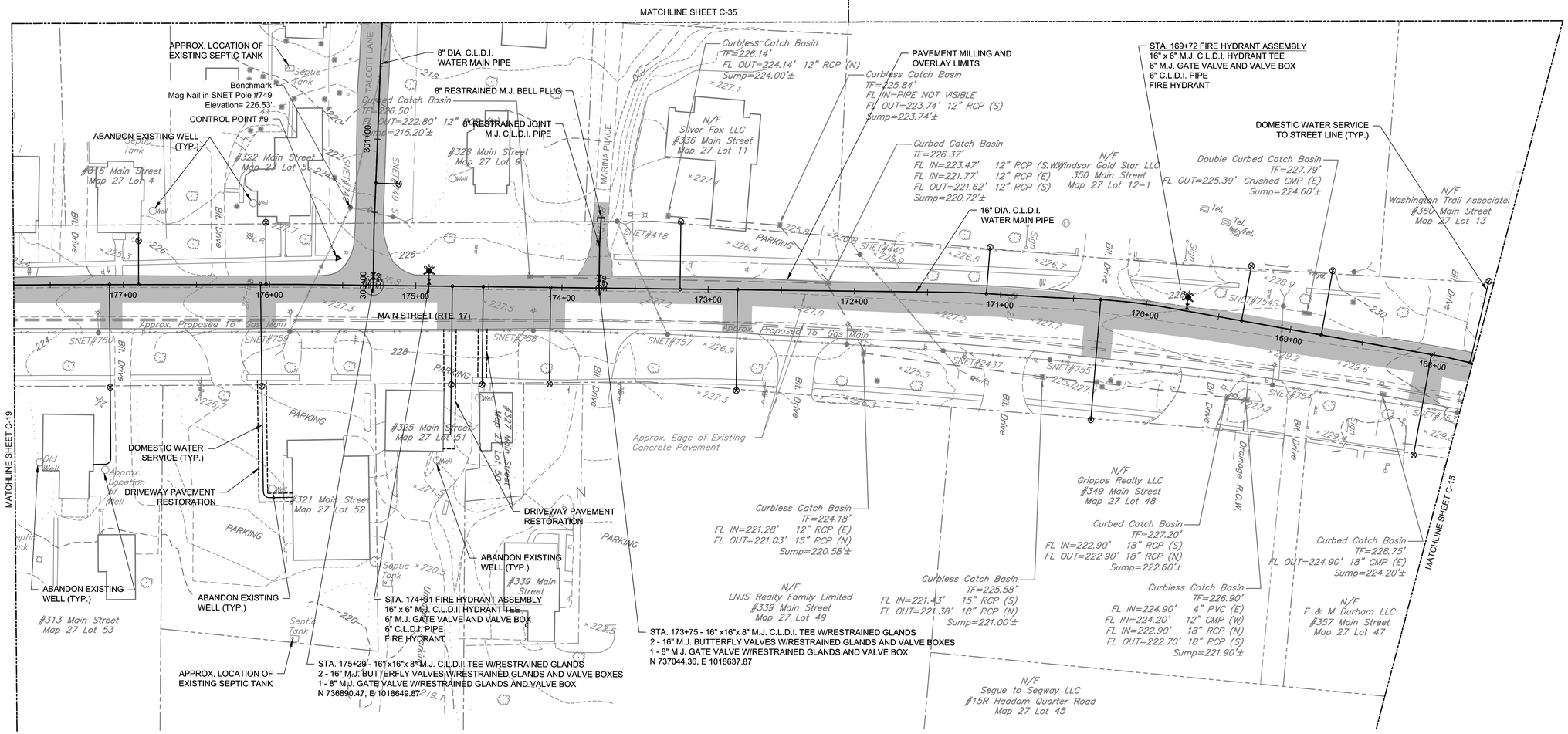

NOTES:

1. CONTRACTOR TO VERIFY LOCATION OF EXISTING SEPTIC SYSTEMS PRIOR TO CONSTRUCTION OF PROPOSED WATER SERVICES. MAINTAIN ALL REQUIRED SEPARATION DISTANCES.
2. PARCEL FEATURES TO BE CONFIRMED BY THE CONTRACTOR PRIOR TO CONSTRUCTION.
3. ALL TRAFFIC SIGNALS SHALL REMAIN OPERATIONAL DURING CONSTRUCTION. TRAFFIC LOOP DETECTORS DAMAGED DURING CONSTRUCTION MUST BE REPAIRED WITHIN 24 HOURS OF BEING DAMAGED.
4. WATER SERVICE PIPES CROSSING UNDER SIDEWALKS ARE TO BE INSTALLED BY EARTH PIERCING ("HOLE HAWG") TRENCHLESS METHODS SO AS NOT TO DISTURB THE EXISTING SIDEWALKS.
5. REFER TO DRAWING C-36 FOR TALCOTT LANE PROFILE VIEW.

SCALE: 1" = 40'

0 40' 80'

MARK	DATE	MADE BY	CHECKED	DESCRIPTION
				100% SUBMITTAL

REVISIONS

AECOM, INC.
AECOM, INFINISE DRIVE
ROCKY HILL, CT 06067
PHONE (860) 263-3000

AECOM

EPA CONTRACT NO. EP-S1-06-01
DURHAM MEADOWS WATERLINE RD
DURHAM AND MIDDLETOWN, CONNECTICUT
TASK ORDER NO. 0060-RD-RD-01D5

TOWN OF DURHAM

PLAN - MAIN STREET (ROUTE 17)

STA. 167+73 TO STA. 177+75

PROJECT NO:	60275749
CAD DWG FILE:	CZ-DUR-017
DESIGNED BY:	KPR
DRAWN BY:	KPR
DEPT CHECK:	GRS
PROJ CHECK:	RMB
DATE:	APRIL 2018
SCALE:	AS NOTED

C-17

ANSI D – 22-Mar-18

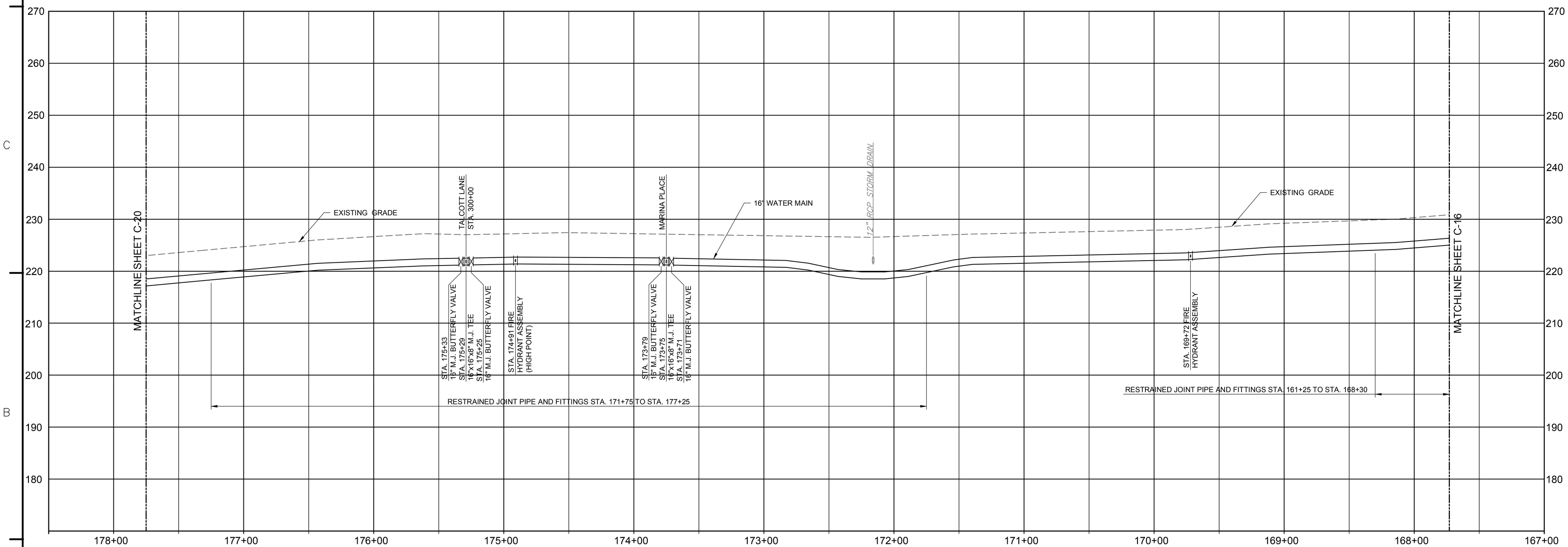

MAIN STREET (ROUTE 17) PROFILE VIEW

STA. 167+73 TO STA. 177+75

SCALES

HORIZONTAL 0 40' 80' — 1" = 40'

VERTICAL 0 10' 20' — 1" = 10'

MARK	DATE	MADE BY	CHECKED	DESCRIPTION
				100% SUBMITTAL

REVISIONS

AECOM, INC.
500 WINDSOR DRIVE
ROCKY HILL, CT 06067
PHONE (860) 263-3000

EPA CONTRACT NO. EP-S1-06-01
DURHAM MEADOWS WATERLINE RD
DURHAM AND MIDDLETOWN, CONNECTICUT
TASK ORDER NO. 0060-RD-RD-01D5

TOWN OF DURHAM

PROFILE - MAIN STREET (ROUTE 17)

STA. 167+73 TO STA. 177+75

PROJECT NO:	60275749
CAD DWG FILE:	CZ-DUR-018
DESIGNED BY:	KPR
DRAWN BY:	KPR
DEPT CHECK:	GRS
PROJ CHECK:	MWM
DATE:	APRIL 2018
SCALE:	AS NOTED

C-18

ANSI D – 29-Jan-18

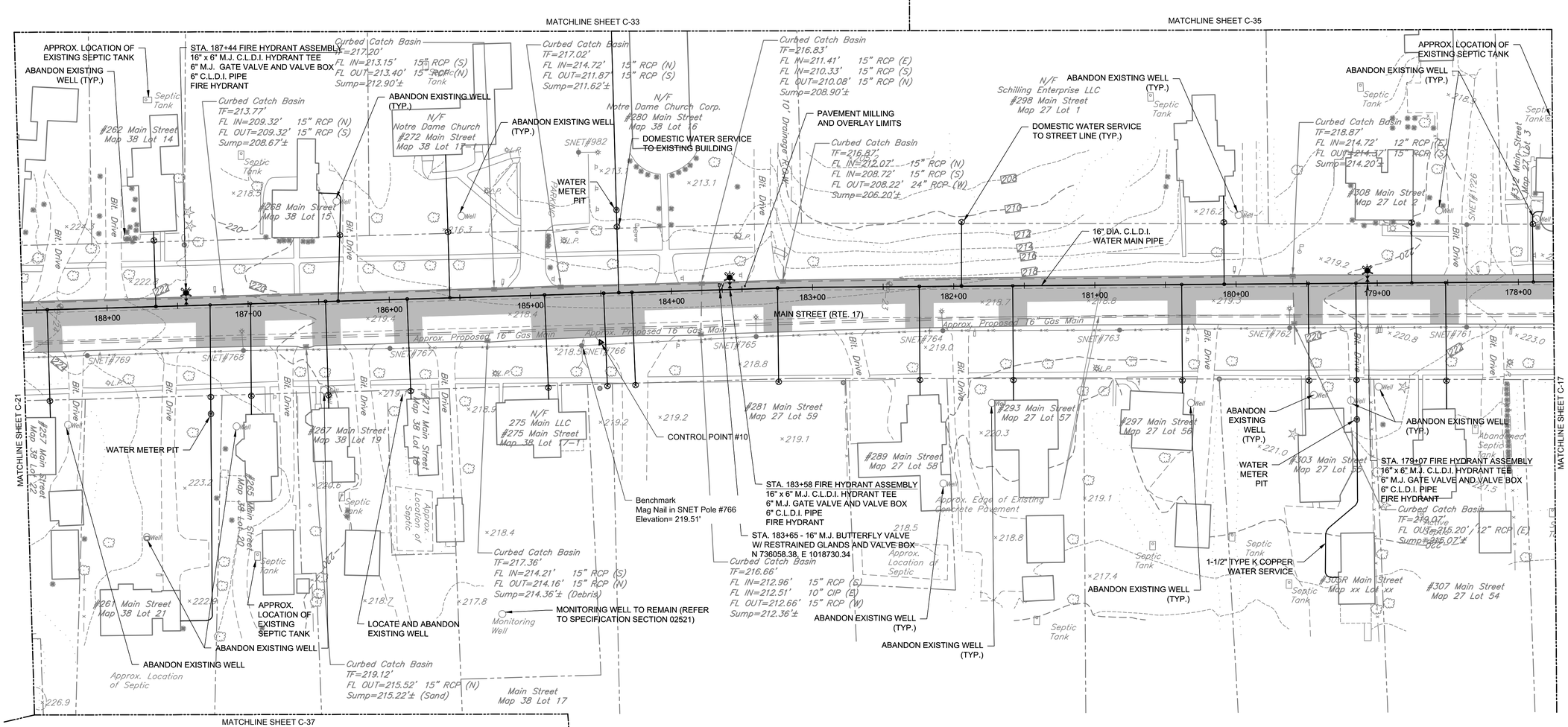

NOTES:

1. CONTRACTOR TO VERIFY LOCATION OF EXISTING SEPTIC SYSTEMS PRIOR TO CONSTRUCTION OF PROPOSED WATER SERVICES. MAINTAIN ALL REQUIRED SEPARATION DISTANCES.
2. PARCEL FEATURES TO BE CONFIRMED BY THE CONTRACTOR PRIOR TO CONSTRUCTION.
3. ALL TRAFFIC SIGNALS SHALL REMAIN OPERATIONAL DURING CONSTRUCTION AND ALL TRAFFIC SIGNAL LOOP DETECTORS MUST BE REPAIRED WITHIN 24 HOURS OF BEING DAMAGED.
4. WATER SERVICE PIPES CROSSING UNDER SIDEWALKS ARE TO BE INSTALLED BY EARTH PIERCING ("HOLE HAWG") TRENCHLESS METHODS SO AS NOT TO DISTURB THE EXISTING SIDEWALKS.

SCALE: 1" = 40'

0 40' 80'

MARK	DATE	MADE BY	CHECKED	DESCRIPTION
				100% SUBMITTAL

REVISIONS

AECOM
AECOM, INC.
100 FINNIGAN DRIVE
ROCKY HILL, CT 06067
PHONE (860) 263-3000

EPA CONTRACT NO. ER-S1-06-01
DURHAM MEADOWS WATERLINE RD
DURHAM AND MIDDLETOWN, CONNECTICUT
TASK ORDER NO. 0060-RD-RD-0105

TOWN OF DURHAM

PLAN - MAIN STREET (ROUTE 17)

STA. 177+75 TO STA. 188+60

PROJECT NO:	60275749
CAD DWG FILE:	CZ-DUR-019
DESIGNED BY:	KPR
DRAWN BY:	KPR
DEPT CHECK:	GRS
PROJ CHECK:	RMB
DATE:	APRIL 2018
SCALE:	AS NOTED

C-19

ANSI D – 22-Mar-18

ANSI D – 5-Feb-18

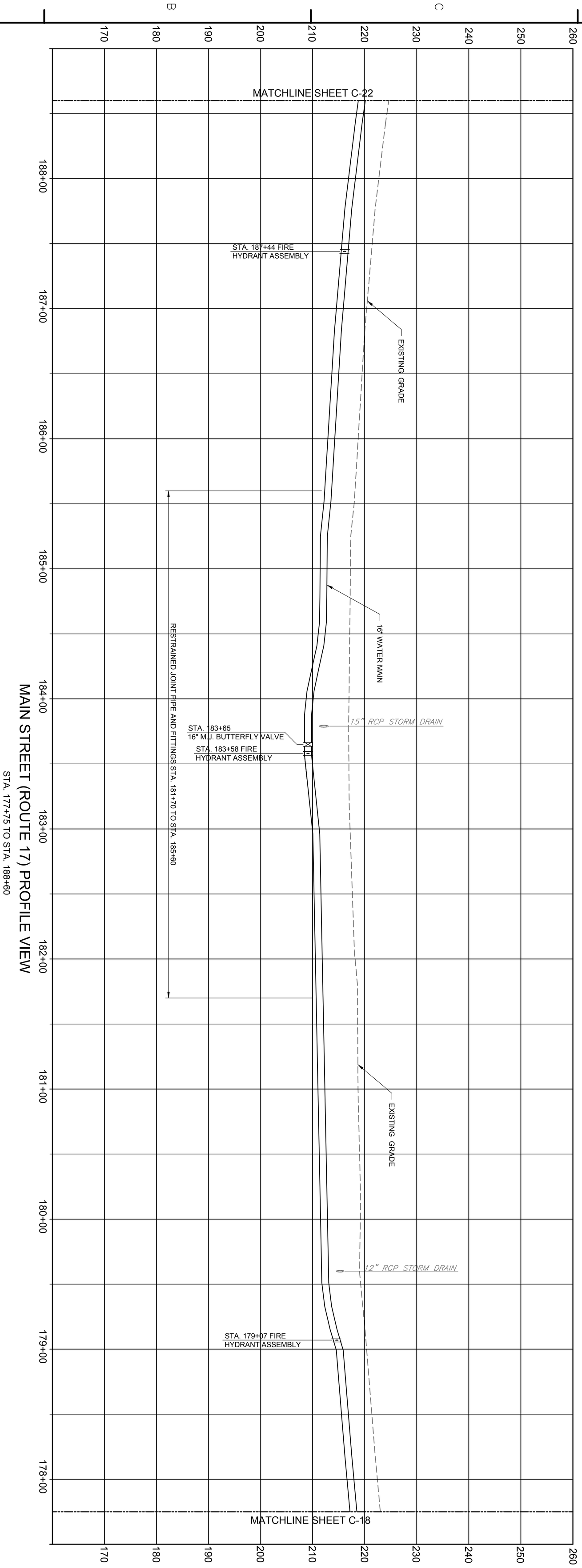

MAIN STREET (ROUTE 17) PROFILE VIEW

STA. 177+75 TO STA. 188+60

SCALES

HORIZONTAL: 1" = 40' (0, 40', 80')

VERTICAL: 1" = 10' (0, 10', 20')

PROJECT NO:	60275749
CAD DWG FILE:	CZ-DUR-020
DESIGNED BY:	KPR
DRAWN BY:	KPR
DEPT CHECK:	GRS
PROJ CHECK:	MWM
DATE:	APRIL 2018
SCALE:	AS NOTED

C-20

EPA CONTRACT NO. EP-S1-06-01
DURHAM MEADOWS WATERLINE RD
DURHAM AND MIDDLETOWN, CONNECTICUT
TASK ORDER NO. 0060-RD-RD-01D5

TOWN OF DURHAM

PROFILE - MAIN STREET (ROUTE 17)

STA. 177+75 TO STA. 188+60

STATE OF CONNECTICUT · DENNIS G. SETTY · No. 12027 · LICENSED PROFESSIONAL ENGINEER

AECOM

AECOM, INC.
500 ENTERPRISE DRIVE
ROCKY HILL, CT 06067
PHONE (860) 263-5800

MARK	DATE	MADE BY	CHECKED	DESCRIPTION
				100% SUBMITTAL

REVISIONS

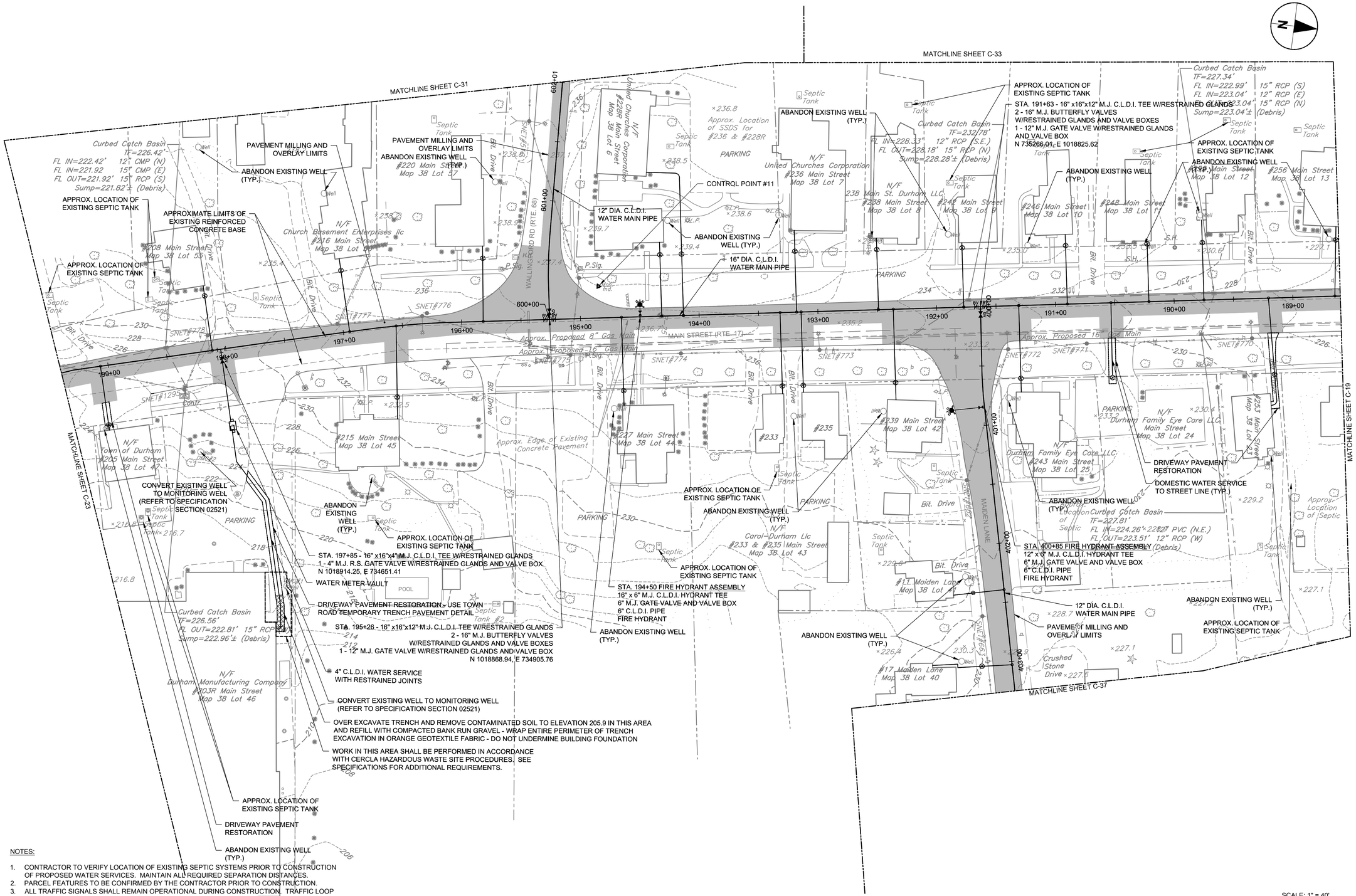

NOTES:

1. CONTRACTOR TO VERIFY LOCATION OF EXISTING SEPTIC SYSTEMS PRIOR TO CONSTRUCTION OF PROPOSED WATER SERVICES. MAINTAIN ALL REQUIRED SEPARATION DISTANCES.
2. PARCEL FEATURES TO BE CONFIRMED BY THE CONTRACTOR PRIOR TO CONSTRUCTION.
3. ALL TRAFFIC SIGNALS SHALL REMAIN OPERATIONAL DURING CONSTRUCTION. TRAFFIC LOOP DETECTORS DAMAGED DURING CONSTRUCTION MUST BE REPAIRED WITHIN 24 HOURS OF BEING DAMAGED.
4. WATER SERVICE PIPES CROSSING UNDER SIDEWALKS ARE TO BE INSTALLED BY EARTH PIERCING ("HOLE HAWG") TRENCHLESS METHODS SO AS NOT TO DISTURB THE EXISTING SIDEWALKS.
5. REFER TO DRAWING C-38 FOR MAIDEN LANE PROFILE VIEW .
6. REFER TO DRAWING C-45 FOR WALLINGFORD ROAD PROFILE VIEW.

MARK	DATE	MADE BY	CHECKED	DESCRIPTION
				100% SUBMITTAL

REVISIONS

AECOM, INC.
250 APPLE TREE DRIVE
ROCKY HILL, CT 06067
PHONE (860) 263-3000

EPA CONTRACT NO. EP-S1-06-01
DURHAM MEADOWS WATERLINE RD
DURHAM AND MIDDLETOWN, CONNECTICUT
TASK ORDER NO. 0060-RD-RD-0105

TOWN OF DURHAM

PLAN - MAIN STREET (ROUTE 17)

STA.188+60-STA.199+40, STA.400+00-STA.403+25 & STA.600+00-STA.602+01

PROJECT NO:	60275749
CAD DWG FILE:	CZ-DUR-021
DESIGNED BY:	KPR
DRAWN BY:	KPR
DEPT CHECK:	GRS
PROJ CHECK:	RMB
DATE:	APRIL 2018
SCALE:	AS NOTED

C-21

ANSI D – 22-Mar-18

ANSI D – 5-Feb-18

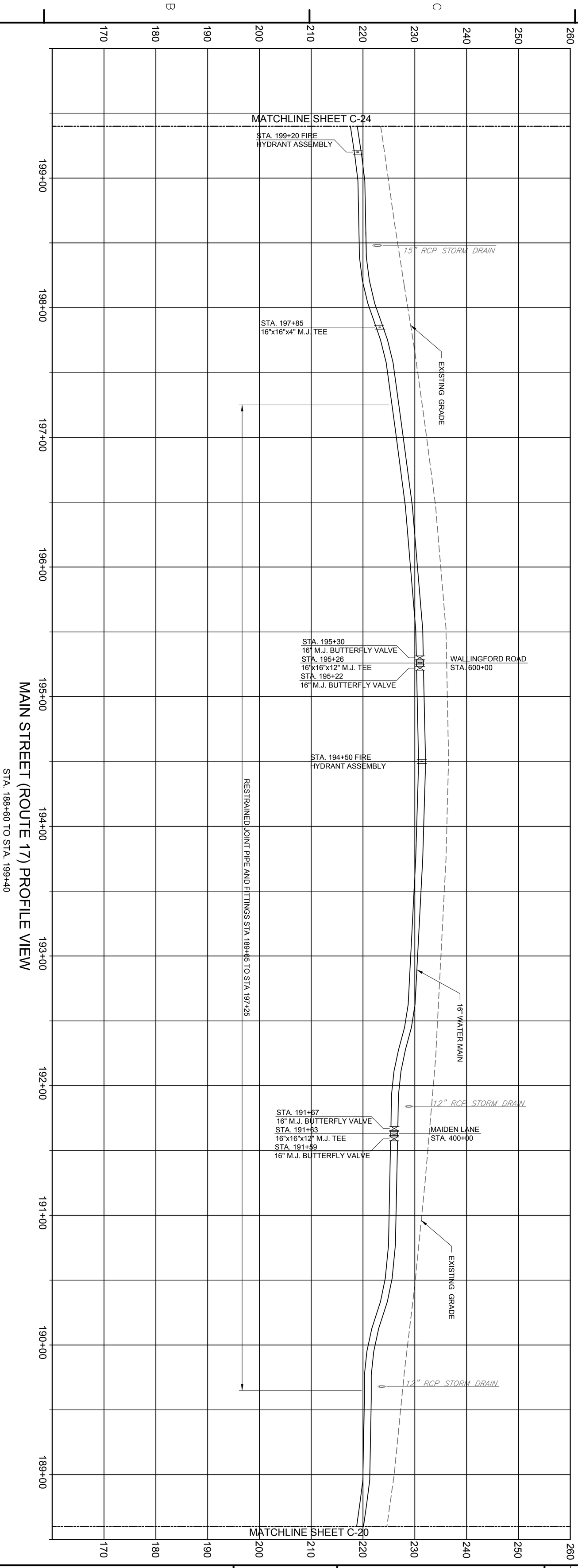

MAIN STREET (ROUTE 17) PROFILE VIEW

STA. 188+60 TO STA. 199+40

SCALES

HORIZONTAL: 1" = 40' (0, 40', 80')

VERTICAL: 1" = 10' (0, 10', 20')

EPA CONTRACT NO. EP-S1-06-01
DURHAM MEADOWS WATERLINE RD
DURHAM AND MIDDLETOWN, CONNECTICUT
TASK ORDER NO. 0060-RD-RD-01D5

TOWN OF DURHAM

PROFILE - MAIN STREET (ROUTE 17)

STA. 188+60 TO STA. 199+40

PROJECT NO: 60275749
CAD DWG FILE: CZ-DUR-022
DESIGNED BY: KPR
DRAWN BY: KPR
DEPT CHECK: GRS
PROJ CHECK: MWM
DATE: APRIL 2018
SCALE: AS NOTED

C-22

STATE OF CONNECTICUT DENNIS G. SEE LICENSED PROFESSIONAL ENGINEER No. 12027

AECOM
AECOM, INC.
500 ENTERPRISE DRIVE
ROCKY HILL, CT 06067
PHONE (860) 263-5800

MARK	DATE	MADE BY	CHECKED	DESCRIPTION
				100% SUBMITTAL

REVISIONS

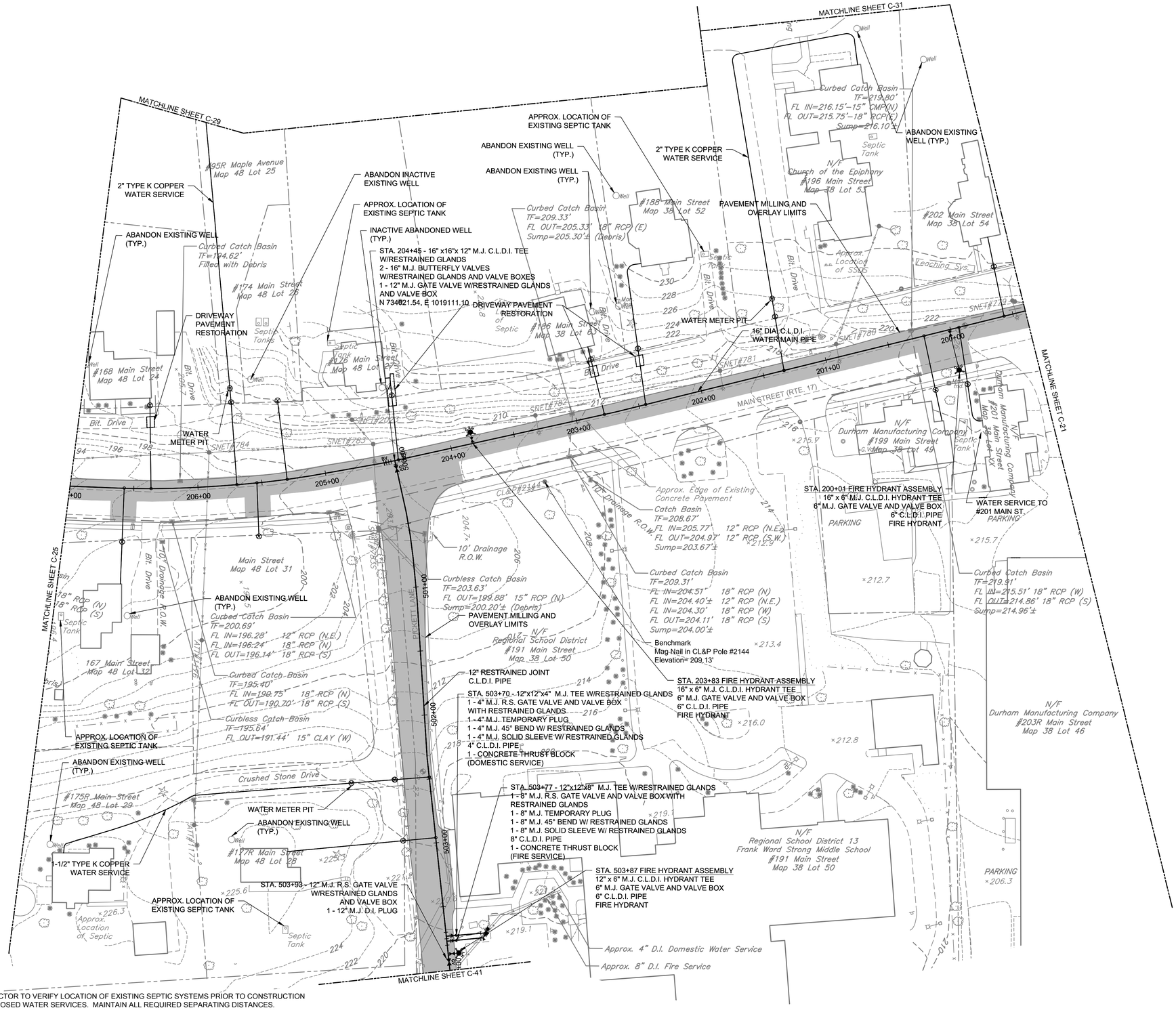

NOTES:

1. CONTRACTOR TO VERIFY LOCATION OF EXISTING SEPTIC SYSTEMS PRIOR TO CONSTRUCTION OF PROPOSED WATER SERVICES. MAINTAIN ALL REQUIRED SEPARATING DISTANCES.
2. PARCEL FEATURES TO BE CONFIRMED BY THE CONTRACTOR PRIOR TO CONSTRUCTION.
3. REFER TO DRAWING C-42 FOR PICKETT LANE PROFILE VIEW.

SCALE: 1" = 40'

0 40' 80'

MARK	DATE	MADE BY	CHECKED	DESCRIPTION
				100% SUBMITTAL

REVISIONS

AECOM
AECOM, INC.
50 MYRICK DRIVE
ROCKY HILL, CT 06067
PHONE (860) 263-3000

EPA CONTRACT NO. EP-S1-06-01
DURHAM MEADOWS WATERLINE RD
DURHAM AND MIDDLETOWN, CONNECTICUT
TASK ORDER NO. 0060-RD-RD-01D5

TOWN OF DURHAM

PLAN - MAIN STREET (ROUTE 17)

STA. 199+40 TO STA. 207+00 & STA. 500+00 TO STA. 504+00

PROJECT NO:	60275749
CAD DWG FILE:	CZ-DUR-023
DESIGNED BY:	KPR
DRAWN BY:	KPR
DEPT CHECK:	GRS
PROJ CHECK:	RMB
DATE:	APRIL 2018
SCALE:	AS NOTED

C-23

ANSI D – 22-Mar-18

ANSI D – 29-Jan-18

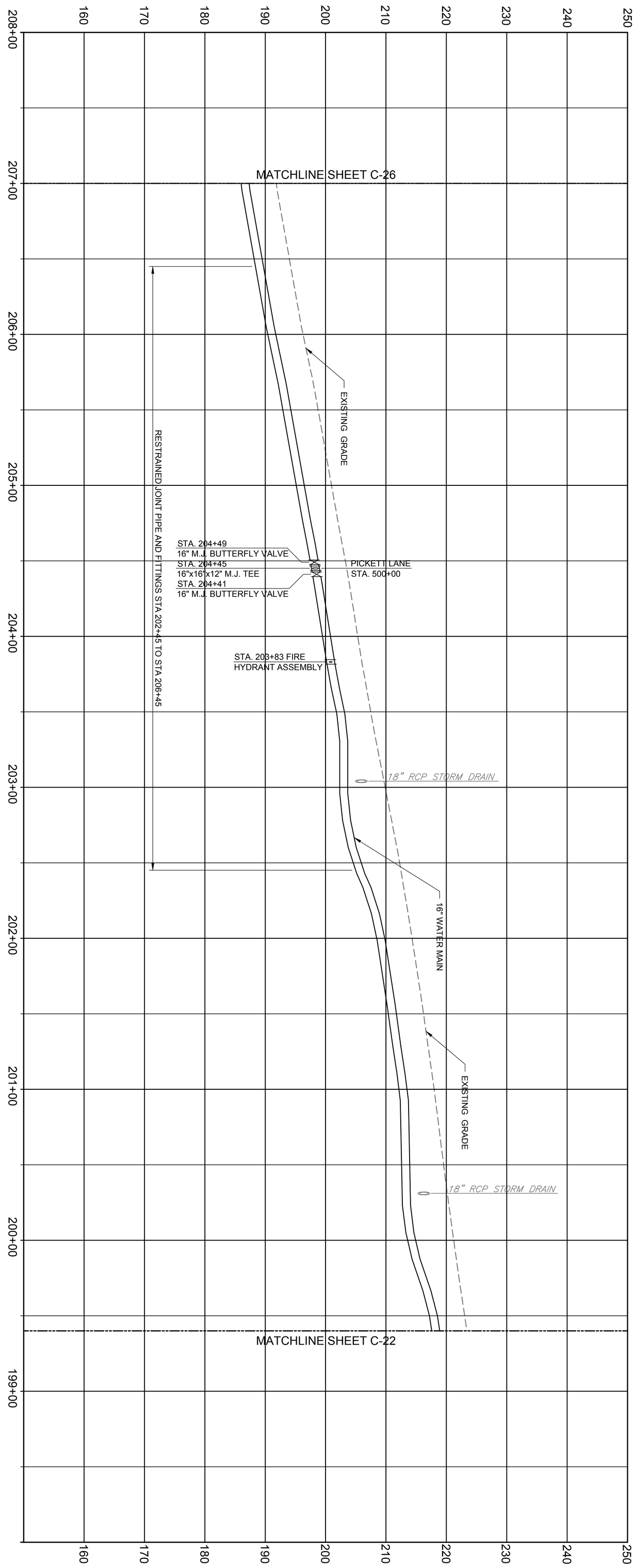

MAIN STREET (ROUTE 17) PROFILE VIEW

STA. 199+40 TO STA. 207+00

SCALES

HORIZONTAL: 1" = 40' (0, 40', 80')

VERTICAL: 1" = 10' (0, 10', 20')

PROJECT NO:	60275749
CAD DWG FILE:	CZ-DUR-024
DESIGNED BY:	KPR
DRAWN BY:	KPR
DEPT CHECK:	GRS
PROJ CHECK:	MWM
DATE:	APRIL 2018
SCALE:	AS NOTED

C-24

EPA CONTRACT NO. EP-S1-06-01
DURHAM MEADOWS WATERLINE RD
DURHAM AND MIDDLETOWN, CONNECTICUT
TASK ORDER NO. 0060-RD-RD-01D5

TOWN OF DURHAM

PROFILE - MAIN STREET (ROUTE 17)

STA. 199+40 TO STA. 207+00

STATE OF CONNECTICUT · DENNIS G. BEST · No. 12027 · LICENSED PROFESSIONAL ENGINEER

AECOM

AECOM, INC.
500 ENTERPRISE DRIVE
ROCKY HILL, CT 06067
PHONE (860) 263-5800

MARK	DATE	MADE BY	CHECKED	DESCRIPTION
				100% SUBMITTAL

REVISIONS

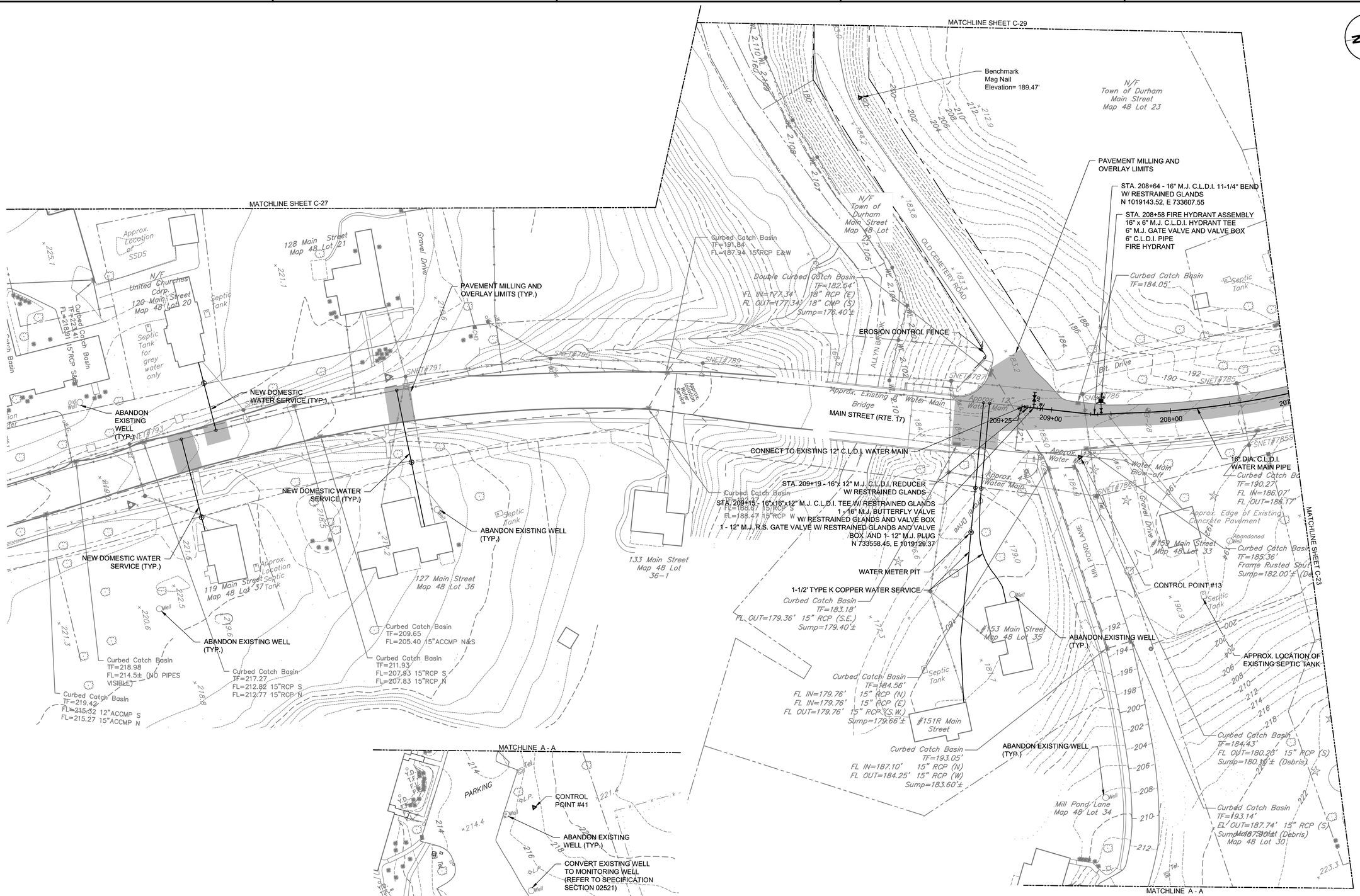

NOTES:

1. CONTRACTOR TO VERIFY LOCATION OF EXISTING SEPTIC SYSTEMS PRIOR TO CONSTRUCTION OF PROPOSED WATER SERVICES. MAINTAIN ALL REQUIRED SEPARATING DISTANCES.
2. PARCEL FEATURES TO BE CONFIRMED BY THE CONTRACTOR PRIOR TO CONSTRUCTION.

SCALE: 1" = 40'

0 40' 80'

MARK	DATE	MADE BY	CHECKED	DESCRIPTION

REVISIONS

100% SUBMITTAL

AECOM
AECOM, INC.
100 FOOT HILL DRIVE
ROCKY HILL, CT 06067
PHONE (860) 263-3000

EPA CONTRACT NO. EP-S1-06-01
DURHAM MEADOWS WATERLINE RD
DURHAM AND MIDDLETOWN, CONNECTICUT
TASK ORDER NO. 0060-RD-RD-0105

TOWN OF DURHAM

PLAN - MAIN ST (ROUTE 17)

STA. 207+00 TO STA. 209+25

PROJECT NO:	60275749
CAD DWG FILE:	CZ-DUR-025
DESIGNED BY:	KPR
DRAWN BY:	KPR
DEPT CHECK:	GRS
PROJ CHECK:	RMB
DATE:	APRIL 2018
SCALE:	AS NOTED

C-25

ANSI D – 22-Mar-18

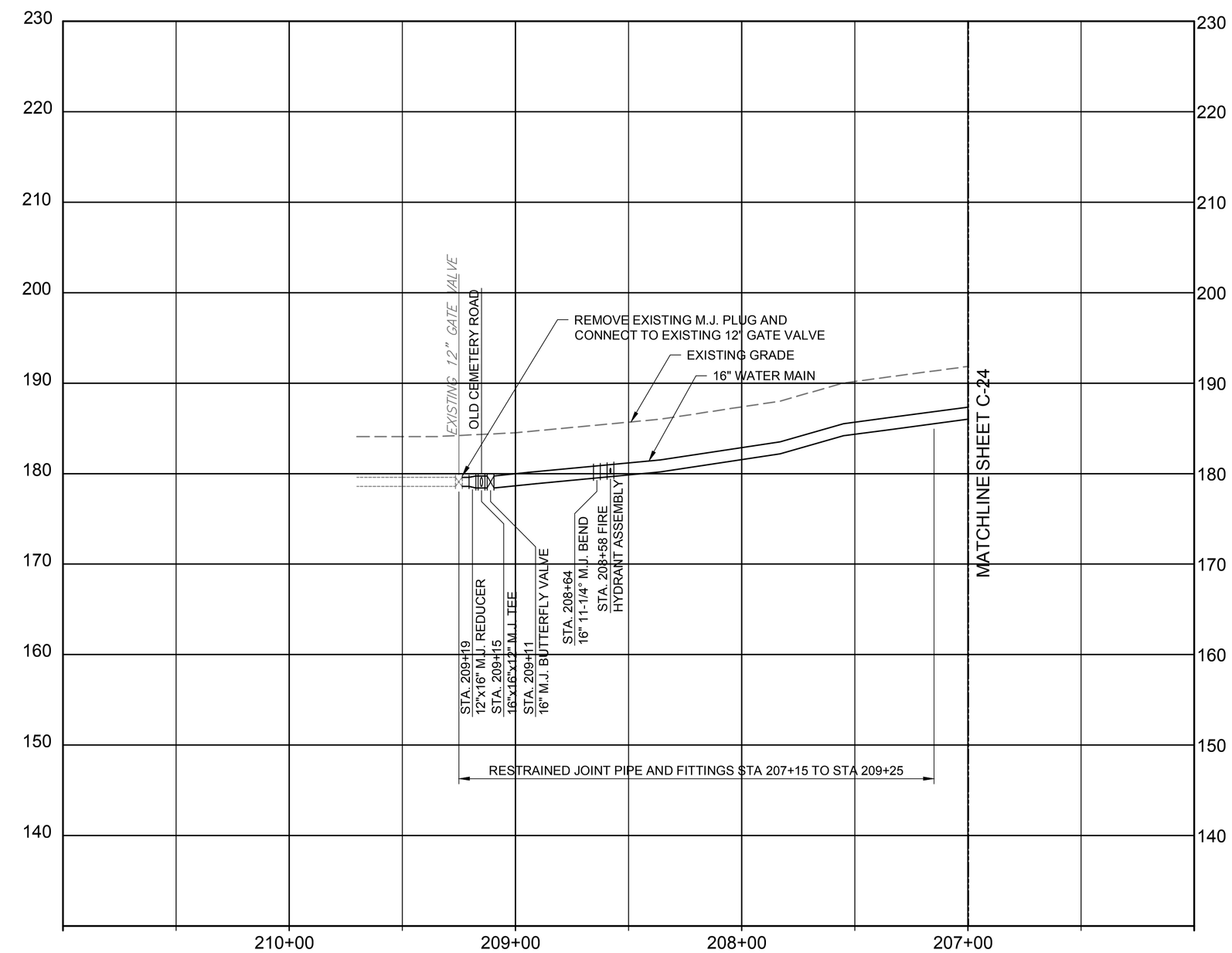

MAIN STREET (ROUTE 17) PROFILE VIEW

STA. 207+00 TO STA. 209+25

SCALES

HORIZONTAL 0 40' 80'
1" = 40'

VERTICAL 0 10' 20'
1" = 10'

MARK	DATE	MADE BY	CHECKED	DESCRIPTION
				100% SUBMITTAL

REVISIONS

AECOM, INC.
500 NORTH GATE DRIVE
ROCKY HILL, CT 06067
PHONE (860) 263-3000

EPA CONTRACT NO. EP-S1-06-01
DURHAM MEADOWS WATERLINE RD
DURHAM AND MIDDLETOWN, CONNECTICUT
TASK ORDER NO. 0060-RD-RD-01D5

TOWN OF DURHAM

PROFILE - MAIN STREET (ROUTE 17)

STA. 207+00 TO STA. 209+25

PROJECT NO:	60275749
CAD DWG FILE:	CZ-DUR-026
DESIGNED BY:	KPR
DRAWN BY:	KPR
DEPT CHECK:	GRS
PROJ CHECK:	MWM
DATE:	APRIL 2018
SCALE:	AS NOTED

C-26

ANSI D – 29-Jan-18

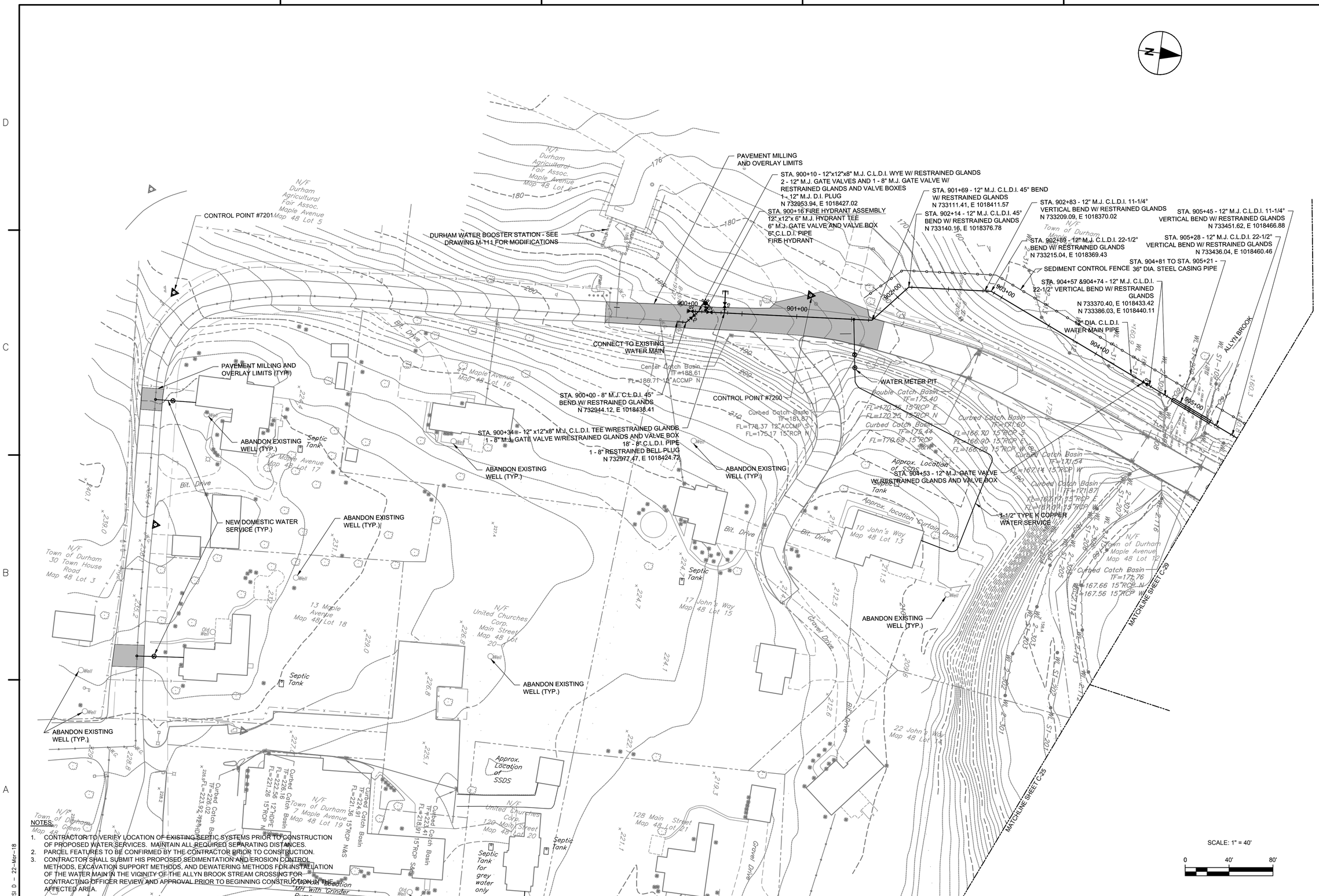

NOTES:

1. CONTRACTOR TO VERIFY LOCATION OF EXISTING SEPTIC SYSTEMS PRIOR TO CONSTRUCTION OF PROPOSED WATER SERVICES. MAINTAIN ALL REQUIRED SEPARATING DISTANCES.
2. PARCEL FEATURES TO BE CONFIRMED BY THE CONTRACTOR PRIOR TO CONSTRUCTION.
3. CONTRACTOR SHALL SUBMIT HIS PROPOSED SEDIMENTATION AND EROSION CONTROL METHODS, EXCAVATION SUPPORT METHODS, AND DEWATERING METHODS FOR INSTALLATION OF THE WATER MAIN IN THE VICINITY OF THE ALLYN BROOK STREAM CROSSING FOR CONTRACTING OFFICER REVIEW AND APPROVAL PRIOR TO BEGINNING CONSTRUCTION IN THE AFFECTED AREA.

MARK	DATE	MADE BY	CHECKED	DESCRIPTION
				100% SUBMITTAL

REVISIONS

AECOM
AECOM, INC.
100 CONGRESS DRIVE
ROCKY HILL, CT 06067
PHONE (860) 263-3000

EPA CONTRACT NO. EP-S1-06-01
DURHAM MEADOWS WATERLINE RD
DURHAM AND MIDDLETOWN, CONNECTICUT
TASK ORDER NO. 0060-RD-RD-0105

TOWN OF DURHAM
PLAN - MAPLE AVENUE
STA. 900+00 TO STA. 905+50

PROJECT NO:	60275749
CAD DWG FILE:	CZ-DUR-027
DESIGNED BY:	KPR
DRAWN BY:	KPR
DEPT CHECK:	GRS
PROJ CHECK:	RMB
DATE:	APRIL 2018
SCALE:	AS NOTED

C-27

ANSI D – 22-Mar-18

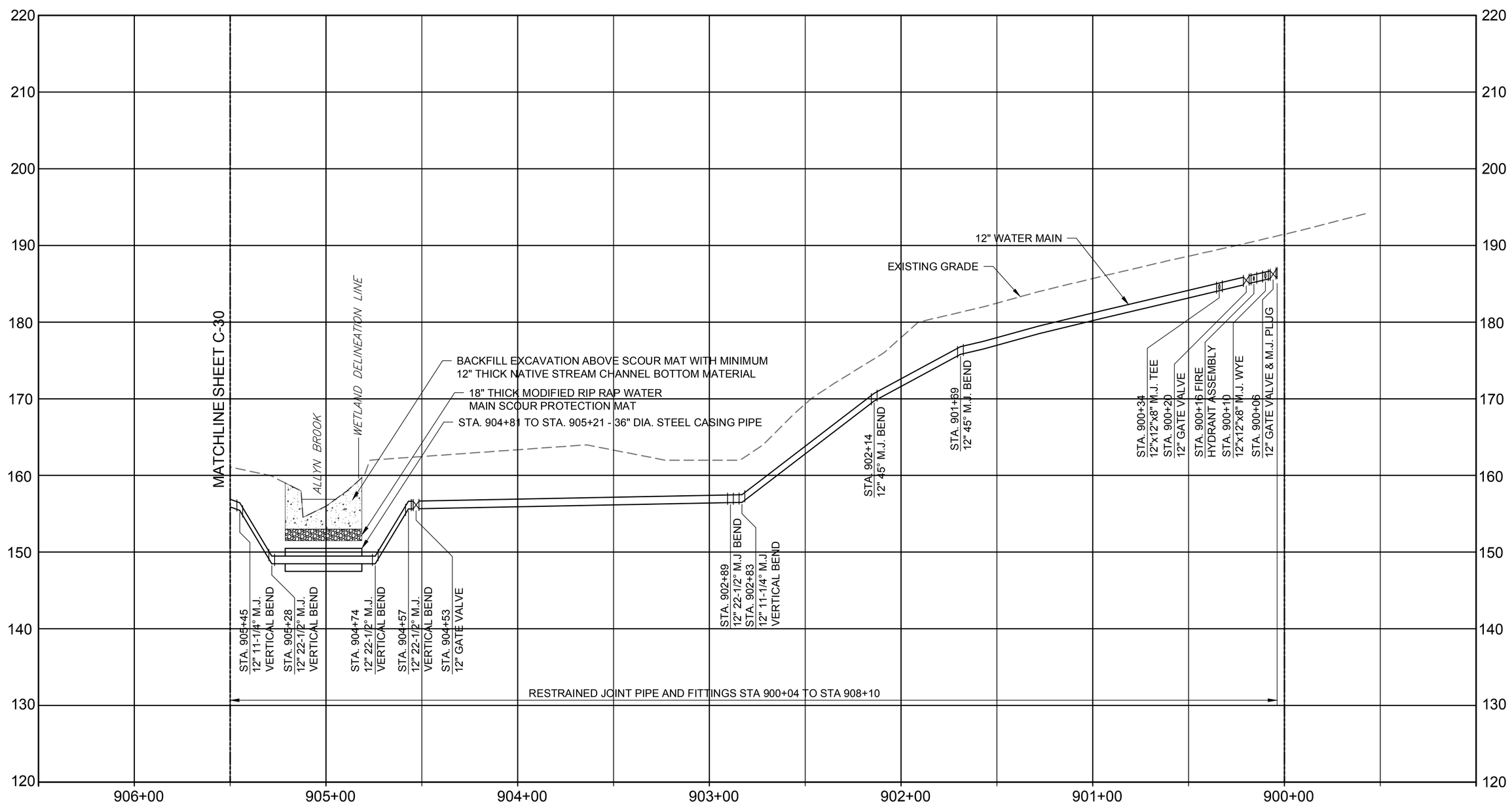

MAPLE AVENUE PROFILE VIEW

STA. 900+00 TO STA. 905+50

SCALES

HORIZONTAL 0 40' 80'
1" = 40'

VERTICAL 0 10' 20'
1" = 10'

MARK	DATE	MADE BY	CHECKED	DESCRIPTION
				100% SUBMITTAL

REVISIONS

AECOM, INC.
500 ENTERPRISE DRIVE
ROCKY HILL, CT 06067
PHONE (860) 263-3000

EPA CONTRACT NO. EP-S1-06-01
DURHAM MEADOWS WATERLINE RD
DURHAM AND MIDDLETOWN, CONNECTICUT
TASK ORDER NO. 0060-RD-RD-0105

TOWN OF DURHAM
PROFILE - MAPLE AVENUE
STA. 900+00 TO STA. 905+50

PROJECT NO:	60275749
CAD DWG FILE:	CZ-DUR-028
DESIGNED BY:	KPR
DRAWN BY:	KPR
DEPT CHECK:	GRS
PROJ CHECK:	MWM
DATE:	APRIL 2018
SCALE:	AS NOTED

C-28

ANSI D – 5-Feb-18

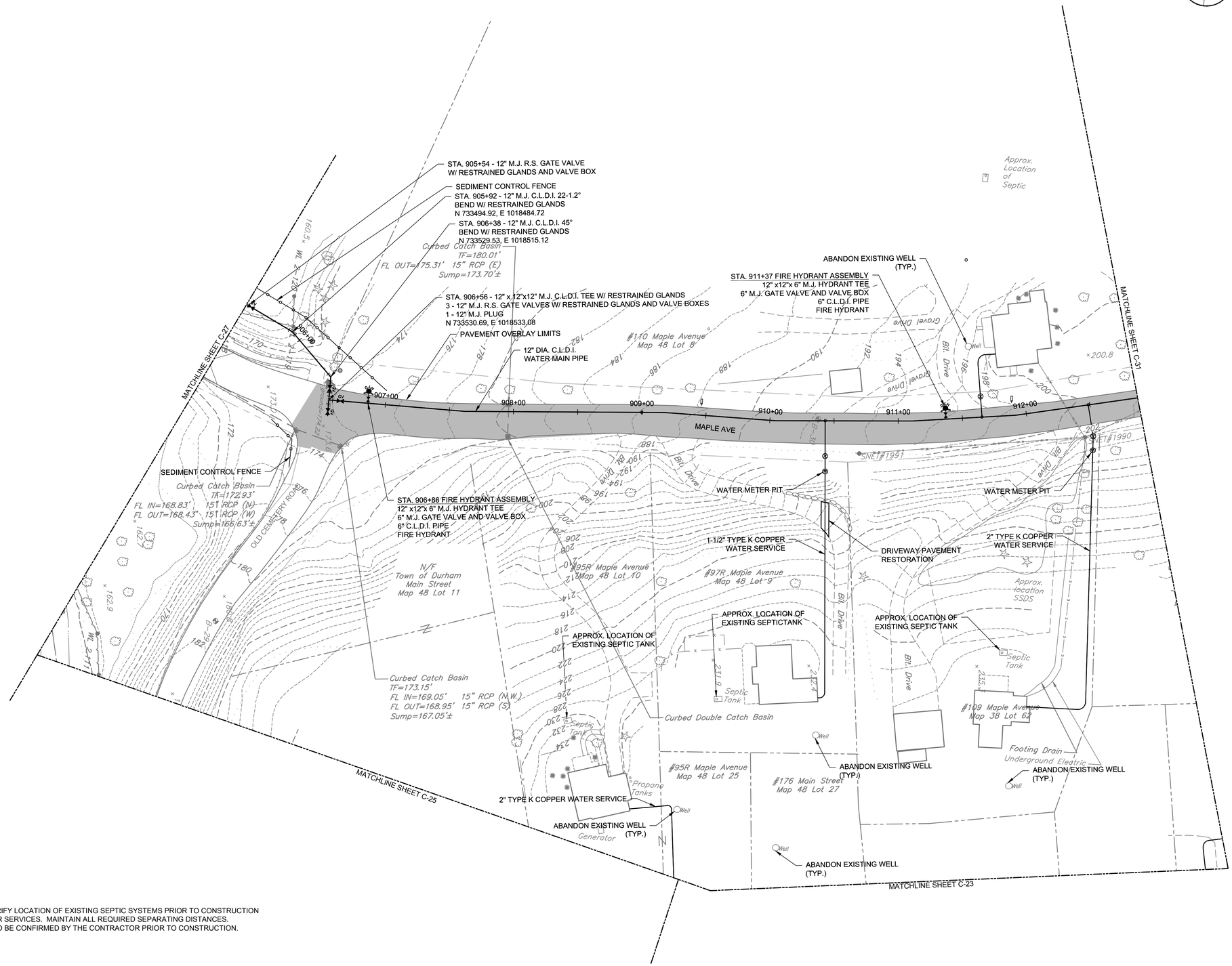

NOTES:

1. CONTRACTOR TO VERIFY LOCATION OF EXISTING SEPTIC SYSTEMS PRIOR TO CONSTRUCTION OF PROPOSED WATER SERVICES. MAINTAIN ALL REQUIRED SEPARATING DISTANCES.
2. PARCEL FEATURES TO BE CONFIRMED BY THE CONTRACTOR PRIOR TO CONSTRUCTION.

SCALE: 1" = 40'

0 40' 80'

100% SUBMITTAL

MARK	DATE	MADE BY	CHECKED	DESCRIPTION

REVISIONS

AECOM, INC.
250 APPROACH DRIVE
ROCKY HILL, CT 06067
PHONE (860) 243-3000

EPA CONTRACT NO. EP-S1-06-01
DURHAM MEADOWS WATERLINE RD
DURHAM AND MIDDLETOWN, CONNECTICUT
TASK ORDER NO. 0060-RD-RD-01D5

TOWN OF DURHAM

PLAN - MAPLE AVENUE

STA. 905+50 TO STA. 912+88

PROJECT NO:	60275749
CAD DWG FILE:	CZ-DUR-029
DESIGNED BY:	KPR
DRAWN BY:	KPR
DEPT CHECK:	GRS
PROJ CHECK:	RMB
DATE:	APRIL 2018
SCALE:	AS NOTED

C-29

ANSI D – 22-Mar-18

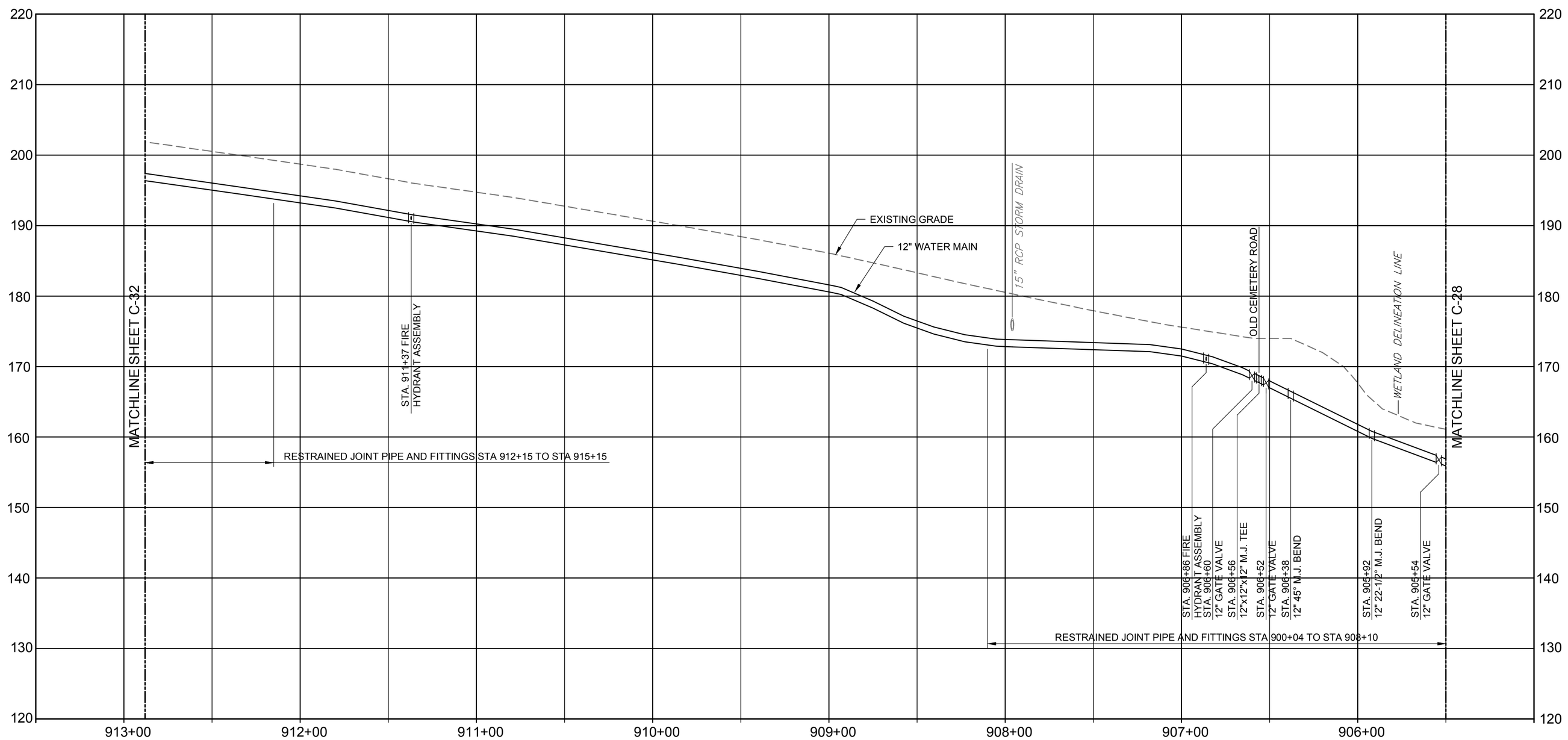

MAPLE AVENUE PROFILE VIEW

STA. 905+50 TO STA. 912+88

SCALES

HORIZONTAL 0 40' 80' 1" = 40'

VERTICAL 0 10' 20' 1" = 10'

MARK	DATE	MADE BY	CHECKED	DESCRIPTION
				100% SUBMITTAL

REVISIONS

AECOM, INC.
50 WOODSIDE DRIVE
ROCKY HILL, CT 06067
PHONE (860) 243-5800

EPA CONTRACT NO. EP-S1-06-01
DURHAM MEADOWS WATERLINE RD.
DURHAM AND MIDDLETOWN, CONNECTICUT
TASK ORDER NO. 0060-RD-RD-01D5

TOWN OF DURHAM
PROFILE - MAPLE AVENUE
STA. 905+50 TO STA. 912+88

PROJECT NO: 60275749
CAD DWG FILE: CZ-DUR-030
DESIGNED BY: KPR
DRAWN BY: KPR
DEPT CHECK: GRS
PROJ CHECK: MWM
DATE: APRIL 2018
SCALE: AS NOTED

C-30

ANSI D – 29-Jan-18

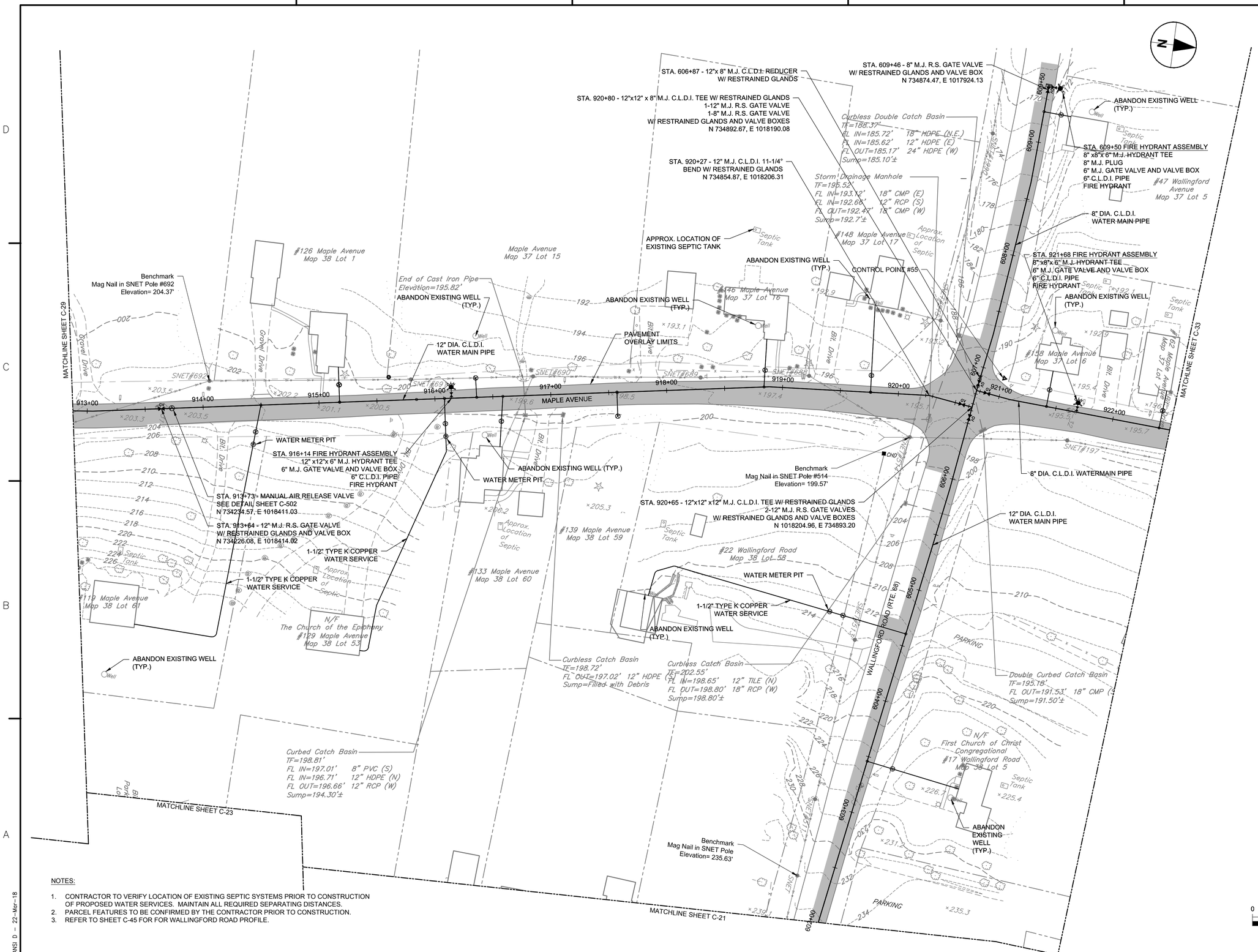

NOTES:

1. CONTRACTOR TO VERIFY LOCATION OF EXISTING SEPTIC SYSTEMS PRIOR TO CONSTRUCTION OF PROPOSED WATER SERVICES. MAINTAIN ALL REQUIRED SEPARATING DISTANCES.
2. PARCEL FEATURES TO BE CONFIRMED BY THE CONTRACTOR PRIOR TO CONSTRUCTION.
3. REFER TO SHEET C-45 FOR FOR WALLINGFORD ROAD PROFILE.

MARK	DATE	MADE BY	CHECKED	DESCRIPTION
				100% SUBMITTAL

REVISIONS

AECOM
AECOM, INC.
100 CONGRESS DRIVE
ROCKY HILL, CT 06067
PHONE (860) 263-3000

EPA CONTRACT NO. EP-S1-06-01
DURHAM MEADOWS WATERLINE RD
DURHAM AND MIDDLETOWN, CONNECTICUT
TASK ORDER NO. 0060-RD-RD-0105

TOWN OF DURHAM

PLAN - MAPLE AVE & WALLINGFORD RD

STA 912+88 TO STA. 922+50 & STA. 602+01 TO STA. 609+50

PROJECT NO:	60275749
CAD DWG FILE:	CZ-DUR-031
DESIGNED BY:	KPR
DRAWN BY:	KPR
DEPT CHECK:	GRS
PROJ CHECK:	RMB
DATE:	APRIL 2018
SCALE:	AS NOTED

C-31

ANSI D – 22-Mar-18

ANSI D – 29-Jan-18

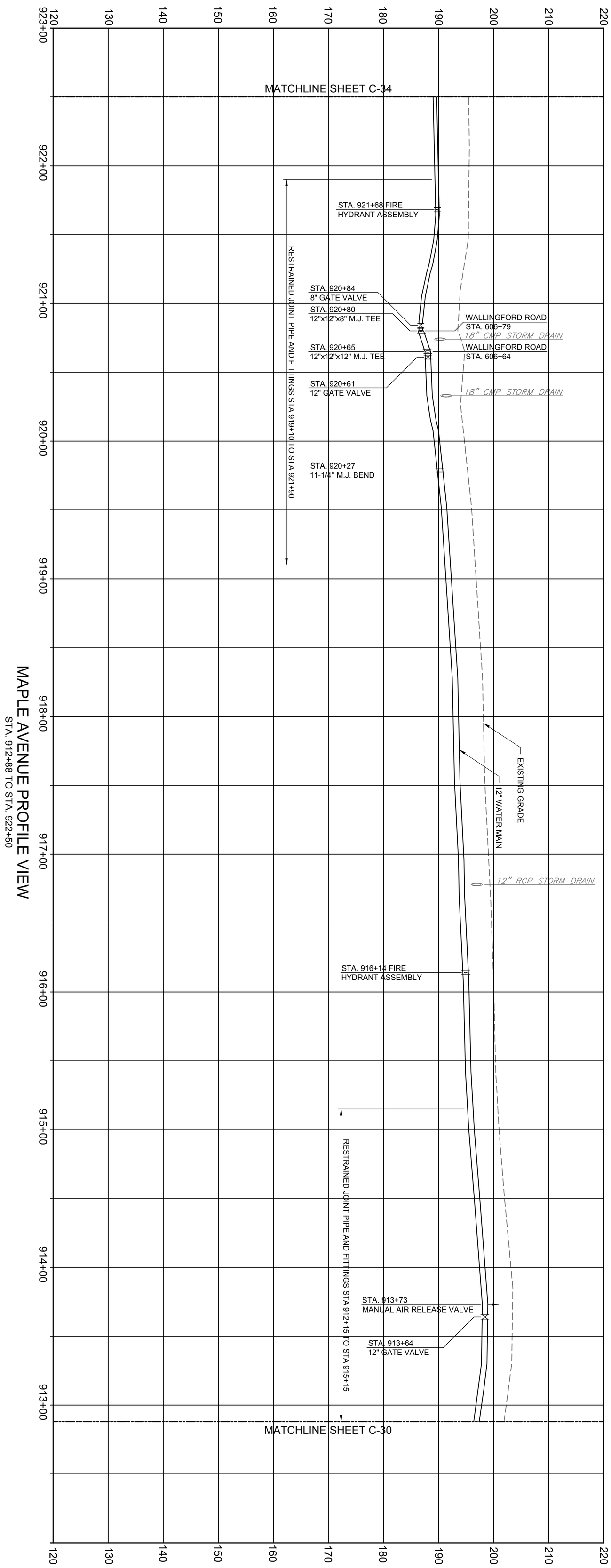

MAPLE AVENUE PROFILE VIEW

STA. 912+88 TO STA. 922+50

SCALES

HORIZONTAL: 0 – 40' – 80', 1" = 40'

VERTICAL: 0 – 10' – 20', 1" = 10'

PROJECT NO:	60275749
CAD DWG FILE:	CZ-DUR-032
DESIGNED BY:	KPR
DRAWN BY:	KPR
DEPT CHECK:	GRS
PROJ CHECK:	MWM
DATE:	APRIL 2018
SCALE:	AS NOTED

C-32

EPA CONTRACT NO. EP-S1-06-01
DURHAM MEADOWS WATERLINE RD
DURHAM AND MIDDLETOWN, CONNECTICUT
TASK ORDER NO. 0060-RD-RD-01D5

TOWN OF DURHAM
PROFILE - MAPLE AVENUE

STA. 912+88 TO STA. 922+50

STATE OF CONNECTICUT · DENNIS G. BETTS · No. 12027 · LICENSED PROFESSIONAL ENGINEER

AECOM

AECOM, INC.
500 ENTERPRISE DRIVE
ROCKY HILL, CT 06067
PHONE (860) 263-5800

MARK	DATE	MADE BY	CHECKED	DESCRIPTION
				100% SUBMITTAL

REVISIONS

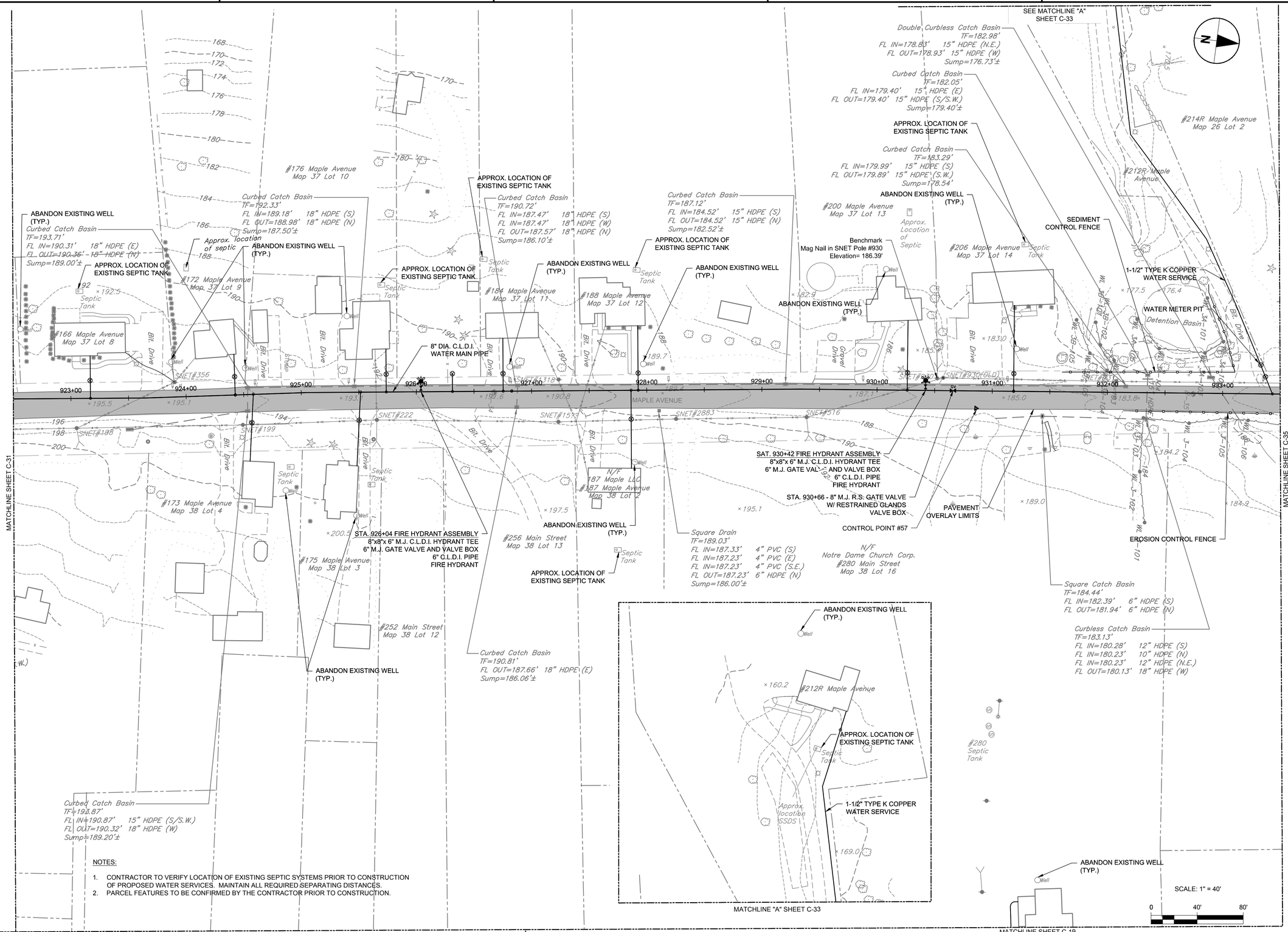

NOTES:

1. CONTRACTOR TO VERIFY LOCATION OF EXISTING SEPTIC SYSTEMS PRIOR TO CONSTRUCTION OF PROPOSED WATER SERVICES. MAINTAIN ALL REQUIRED SEPARATING DISTANCES.
2. PARCEL FEATURES TO BE CONFIRMED BY THE CONTRACTOR PRIOR TO CONSTRUCTION.

100% SUBMITTAL

MARK	DATE	MADE BY	CHECKED	DESCRIPTION

REVISIONS

AECOM, INC.
50 MYRTLE DRIVE
ROCKY HILL, CT 06067
PHONE (860) 263-3000

AECOM

EPA CONTRACT NO. EP-S1-06-01
DURHAM MEADOWS WATERLINE RD
DURHAM AND MIDDLETOWN, CONNECTICUT
TASK ORDER NO. 0060-RD-RD-01D5

TOWN OF DURHAM

PLAN - MAPLE AVENUE

STA. 922+50 TO STA. 933+50

PROJECT NO:	60275749
CAD DWG FILE:	CZ-DUR-033
DESIGNED BY:	KPR
DRAWN BY:	KPR
DEPT CHECK:	GRS
PROJ CHECK:	RMB
DATE:	APRIL 2018
SCALE:	AS NOTED

C-33

ANSI D – 22-Mar-18

ANSI D – 29-Jan-18

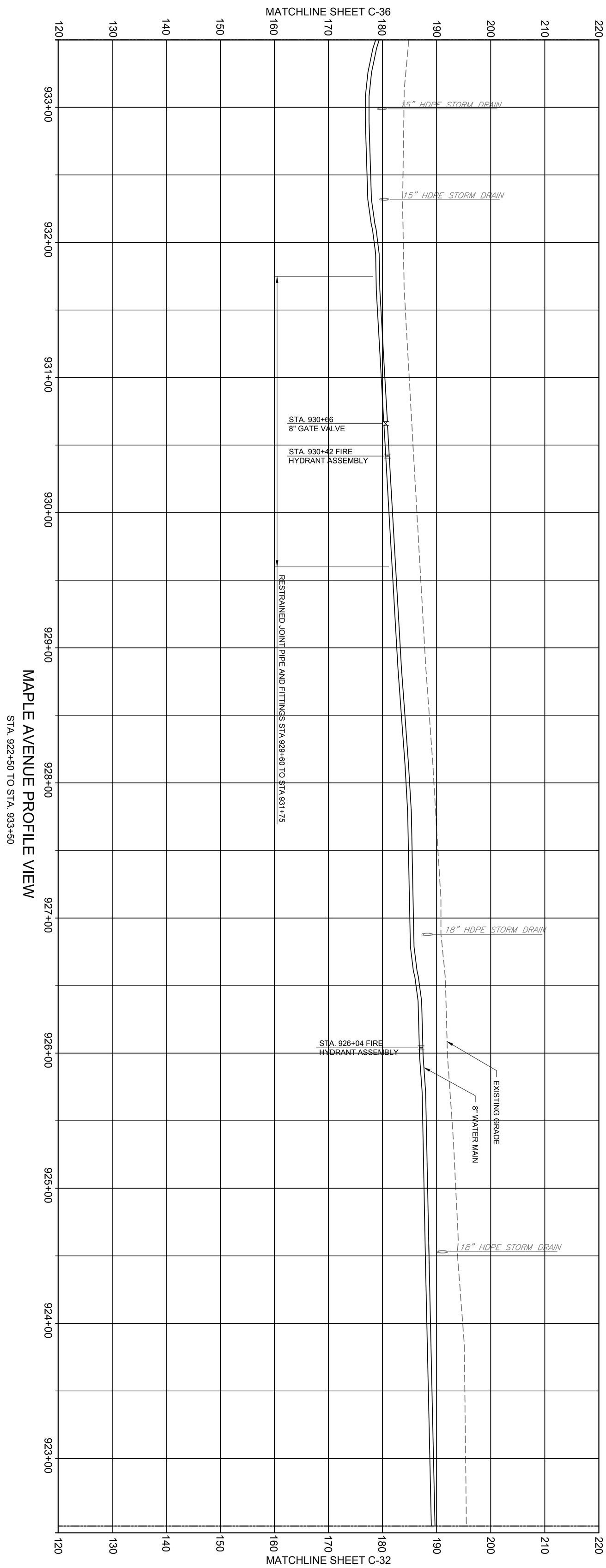

MAPLE AVENUE PROFILE VIEW

STA. 922+50 TO STA. 933+50

SCALES

HORIZONTAL: 1" = 40' (0, 40', 80')

VERTICAL: 1" = 10' (0, 10', 20')

EPA CONTRACT NO. EP-S1-06-01
DURHAM MEADOWS WATERLINE RD
DURHAM AND MIDDLETOWN, CONNECTICUT
TASK ORDER NO. 0060-RD-RD-01D5

TOWN OF DURHAM

PROFILE - MAPLE AVENUE

STA. 922+50 TO STA. 933+50

STATE OF CONNECTICUT — DENNIS G. SETTY — No. 12027 — LICENSED PROFESSIONAL ENGINEER

AECOM

AECOM, INC.
500 ENTERPRISE DRIVE
ROCKY HILL, CT 06067
PHONE (860) 263-5800

MARK	DATE	MADE BY	CHECKED	DESCRIPTION
				100% SUBMITTAL

REVISIONS

PROJECT NO: 60275749
CAD DWG FILE: CZ-DUR-034
DESIGNED BY: KPR
DRAWN BY: KPR
DEPT CHECK: GRS
PROJ CHECK: MWM
DATE: APRIL 2018
SCALE: AS NOTED

C-34

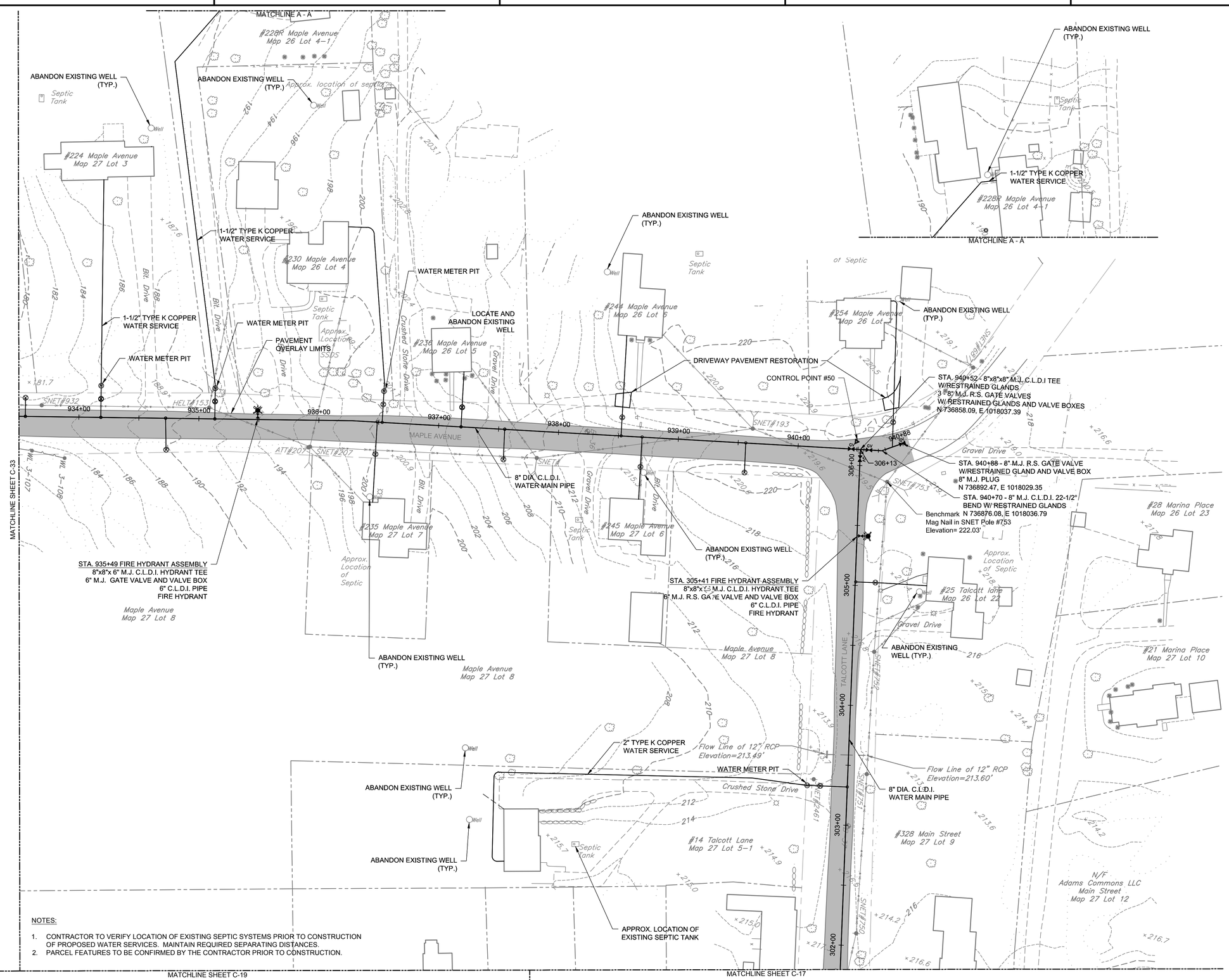

NOTES:

1. CONTRACTOR TO VERIFY LOCATION OF EXISTING SEPTIC SYSTEMS PRIOR TO CONSTRUCTION OF PROPOSED WATER SERVICES. MAINTAIN REQUIRED SEPARATING DISTANCES.
2. PARCEL FEATURES TO BE CONFIRMED BY THE CONTRACTOR PRIOR TO CONSTRUCTION.

MARK	DATE	MADE BY	CHECKED	DESCRIPTION
				100% SUBMITTAL

REVISIONS

AECOM, INC.
250 APPLEWOOD DRIVE
ROCKY HILL, CT 06067
PHONE (860) 263-3000

EPA CONTRACT NO. EP-S1-06-01
DURHAM MEADOWS WATERLINE RD
DURHAM AND MIDDLETOWN, CONNECTICUT
TASK ORDER NO. 0060-RD-RD-01D5

TOWN OF DURHAM

PLAN - MAPLE AVENUE & TALCOTT LANE

STA.933+50 TO STA. 940+88 & STA. 301+80 TO STA. 306+13

PROJECT NO:	60275749
CAD DWG FILE:	CZ-DUR-035
DESIGNED BY:	KPR
DRAWN BY:	KPR
DEPT CHECK:	GRS
PROJ CHECK:	RMB
DATE:	APRIL 2018
SCALE:	AS NOTED

C-35

ANSI D – 22-Mar-18

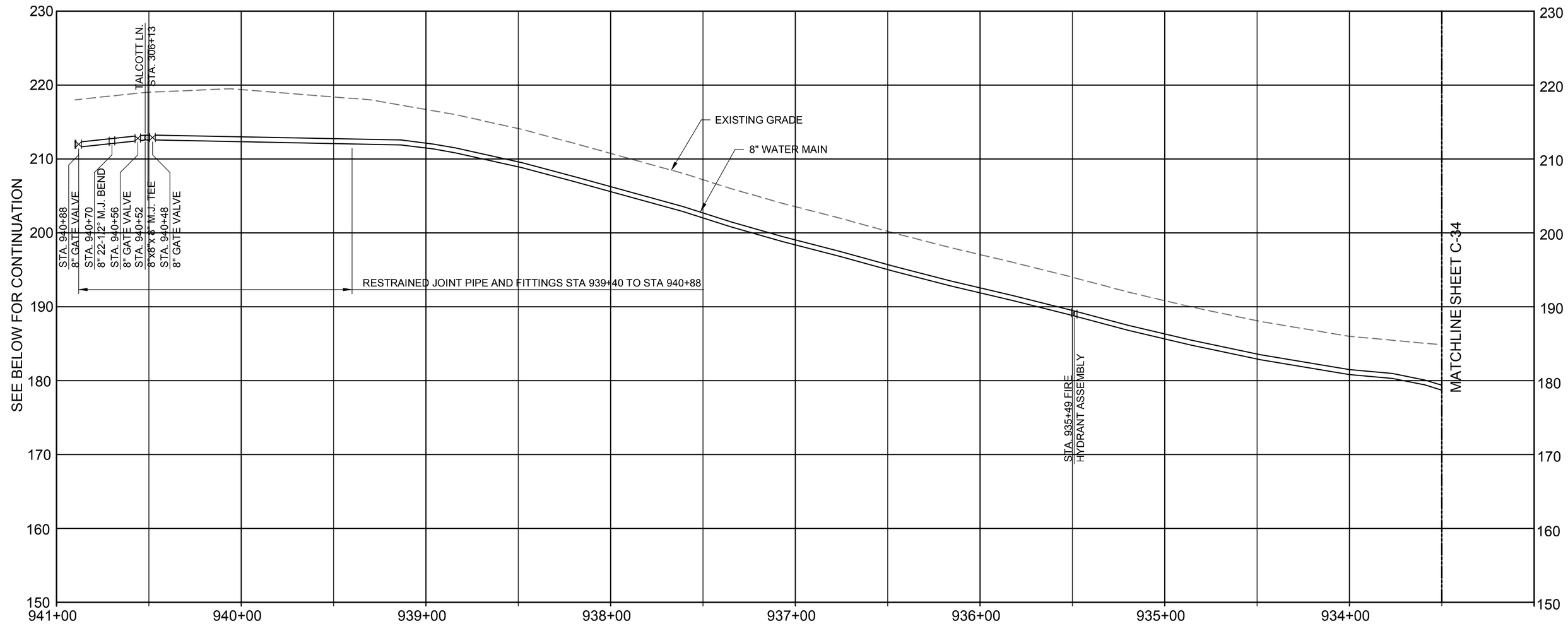

MAPLE AVENUE PROFILE VIEW

STA. 933+50 TO STA. 940+88

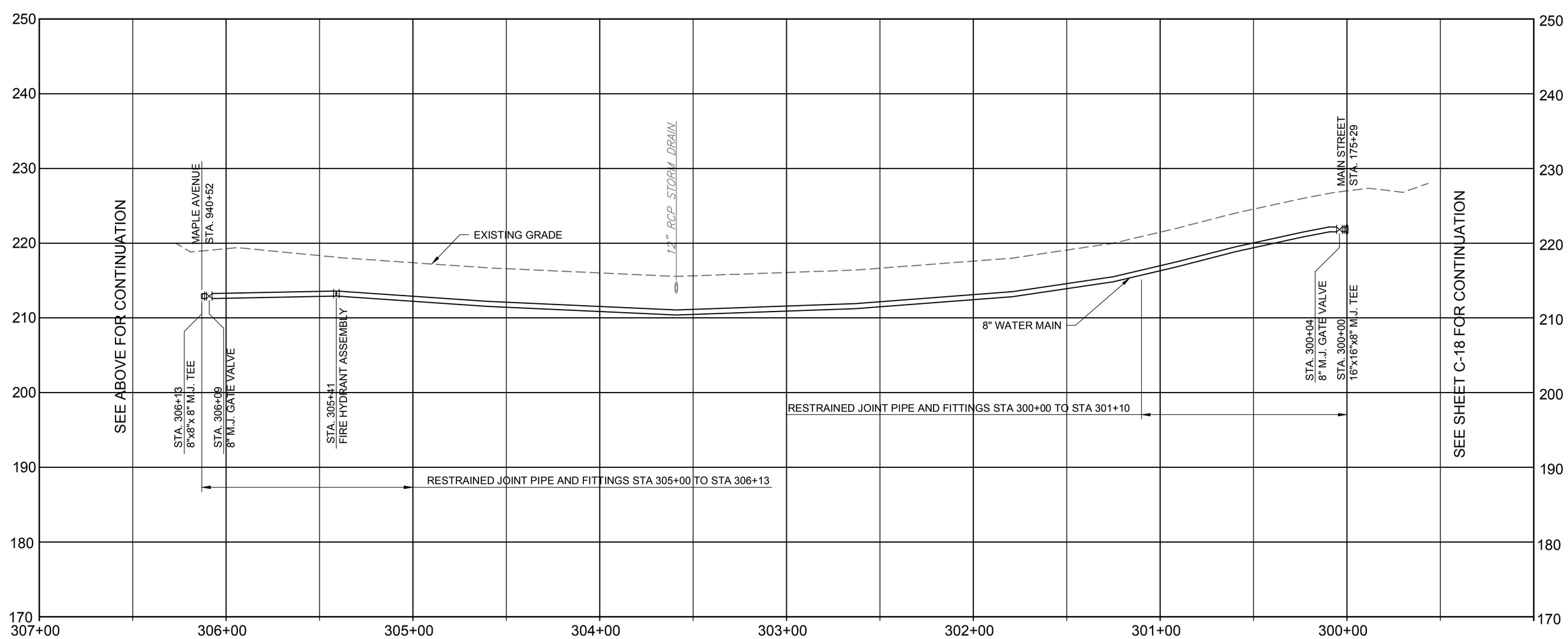

TALCOTT LANE PROFILE VIEW

STA. 300+00 TO STA. 306+13

SCALES

HORIZONTAL: 0 — 40' — 80'; 1" = 40'

VERTICAL: 0 — 10' — 20'; 1" = 10'

MARK	DATE	MADE BY	CHECKED	DESCRIPTION
				100% SUBMITTAL

REVISIONS

AECOM, INC.
50 MYRTLE TREE DRIVE
ROCKY HILL, CT 06067
PHONE (860) 263-3800

EPA CONTRACT NO. EP-S1-06-01
DURHAM MEADOWS WATERLINE RD
DURHAM AND MIDDLETOWN, CONNECTICUT
TASK ORDER NO. 0060-RD-RD-01D5

TOWN OF DURHAM

PROFILES - MAPLE AVENUE & TALCOTT LANE

STA. 933+50 TO STA. 940+88 & STA. 300+00 TO STA. 306+13

PROJECT NO:	60275749
CAD DWG FILE:	CZ-DUR-036
DESIGNED BY:	KPR
DRAWN BY:	KPR
DEPT CHECK:	GRS
PROJ CHECK:	MWM
DATE:	APRIL 2018
SCALE:	AS NOTED

C-36

ANSI D — 29-Jan-18

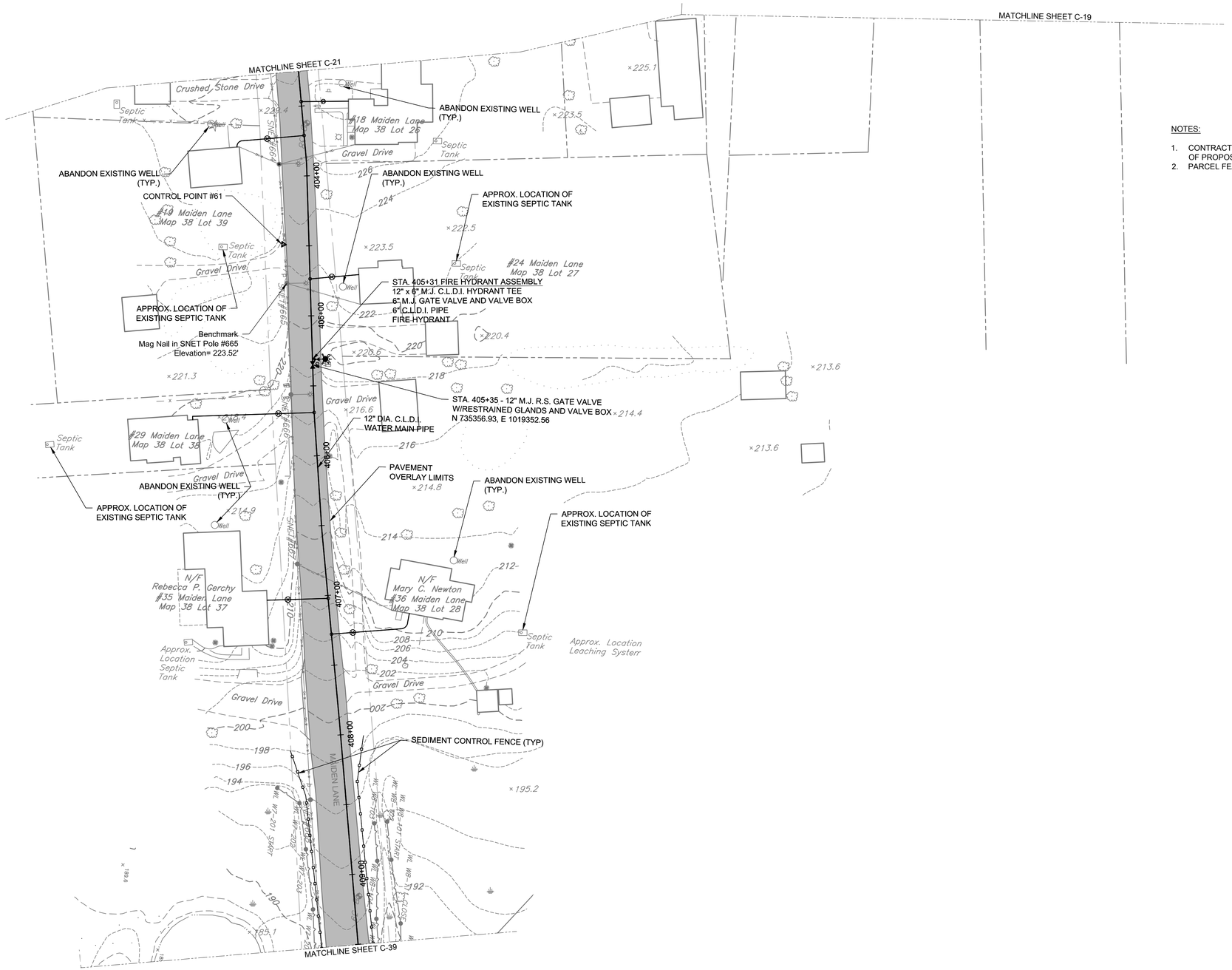
MATCHLINE SHEET C-21
MATCHLINE SHEET C-19
MATCHLINE SHEET C-39
Crushed Stone Drive
Septic Tank
Well
#18 Maiden Lane
Map 38 Lot 26
Gravel Drive
ABANDON EXISTING WELL (TYP.)
ABANDON EXISTING WELL (TYP.)
ABANDON EXISTING WELL (TYP.)
CONTROL POINT #61
#19 Maiden Lane
Map 38 Lot 39
APPROX. LOCATION OF EXISTING SEPTIC TANK
APPROX. LOCATION OF EXISTING SEPTIC TANK
#24 Maiden Lane
Map 38 Lot 27
STA. 405+31 FIRE HYDRANT ASSEMBLY
12" x 6" M.J. C.L.D.I. HYDRANT TEE
6" M.J. GATE VALVE AND VALVE BOX
6" C.L.D.I. PIPE
FIRE HYDRANT
APPROX. LOCATION OF EXISTING SEPTIC TANK
Benchmark
Mag Nail in SNET Pole #665
Elevation= 223.52'
STA. 405+35 - 12" M.J. R.S. GATE VALVE
W/RESTRAINED GLANDS AND VALVE BOX
N 735356.93, E 1019352.56
12" DIA. C.L.D.I.
WATER MAIN PIPE
#29 Maiden Lane
Map 38 Lot 38
ABANDON EXISTING WELL (TYP.)
APPROX. LOCATION OF EXISTING SEPTIC TANK
PAVEMENT
OVERLAY LIMITS
ABANDON EXISTING WELL (TYP.)
APPROX. LOCATION OF EXISTING SEPTIC TANK
N/F
Rebecca P. Gerchy
#35 Maiden Lane
Map 38 Lot 37
N/F
Mary C. Newton
#36 Maiden Lane
Map 38 Lot 28
Approx. Location Septic Tank
Approx. Location Leaching System
SEDIMENT CONTROL FENCE (TYP)
MAIDEN LANE
404+00
405+00
406+00
407+00
408+00
409+00
SNET Pole #665
SNET Pole #666
SNET Pole #667
SNET Pole #668
SNET Pole #669
SNET Pole #670
SNET Pole #671
SNET Pole #672
SNET Pole #673
SNET Pole #674
SNET Pole #675
SNET Pole #676
SNET Pole #677
SNET Pole

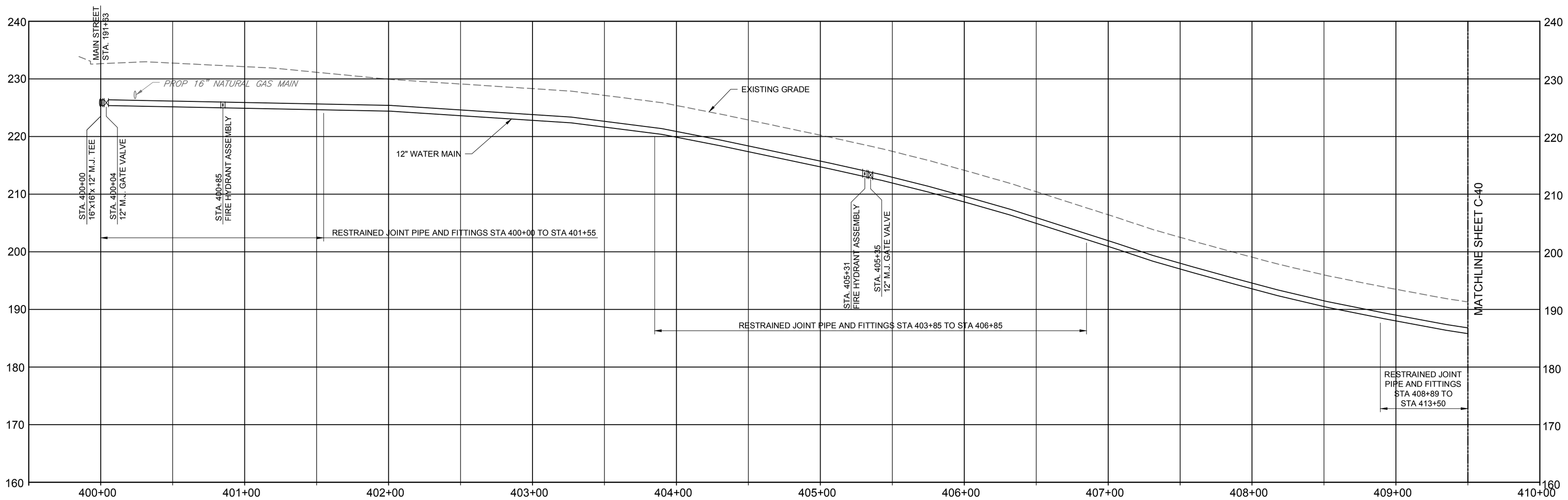

MAIDEN LANE PROFILE VIEW

STA. 400+00 TO STA. 409+50

SCALES

HORIZONTAL 0 40' 80' 1" = 40'

VERTICAL 0 10' 20' 1" = 10'

MARK	DATE	MADE BY	CHECKED	DESCRIPTION

REVISIONS

100% SUBMITTAL

AECOM, INC.
50 MYRONS DRIVE
ROCKY HILL, CT 06067
PHONE (860) 263-3800

EPA CONTRACT NO. EP-S1-06-01
DURHAM MEADOWS WATERLINE RD
DURHAM AND MIDDLETOWN, CONNECTICUT
TASK ORDER NO. 0060-RD-RD-01D5

TOWN OF DURHAM

PROFILE - MAIDEN LANE

STA. 400+00 TO STA. 409+50

PROJECT NO:	60275749
CAD DWG FILE:	CZ-DUR-038
DESIGNED BY:	NAV
DRAWN BY:	NAV
DEPT CHECK:	GRS
PROJ CHECK:	MWM
DATE:	APRIL 2018
SCALE:	AS NOTED

C-38

ANSI D - 29-Jan-18

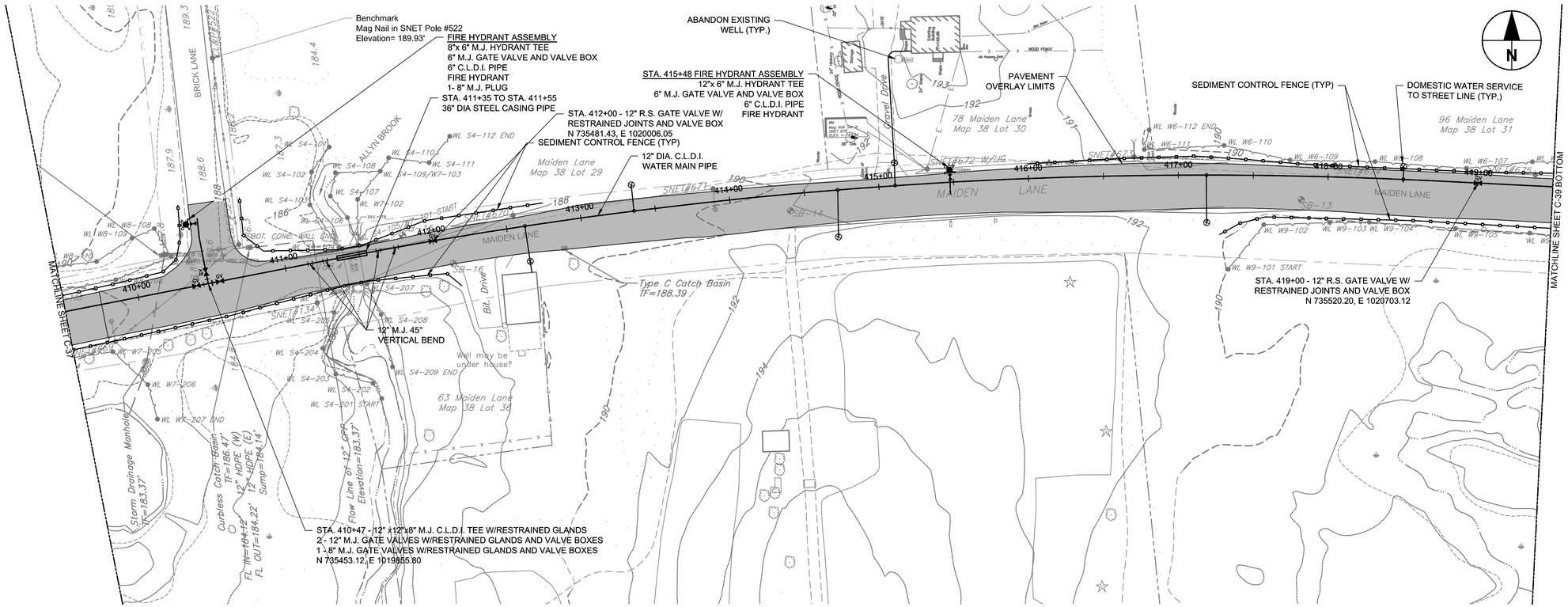

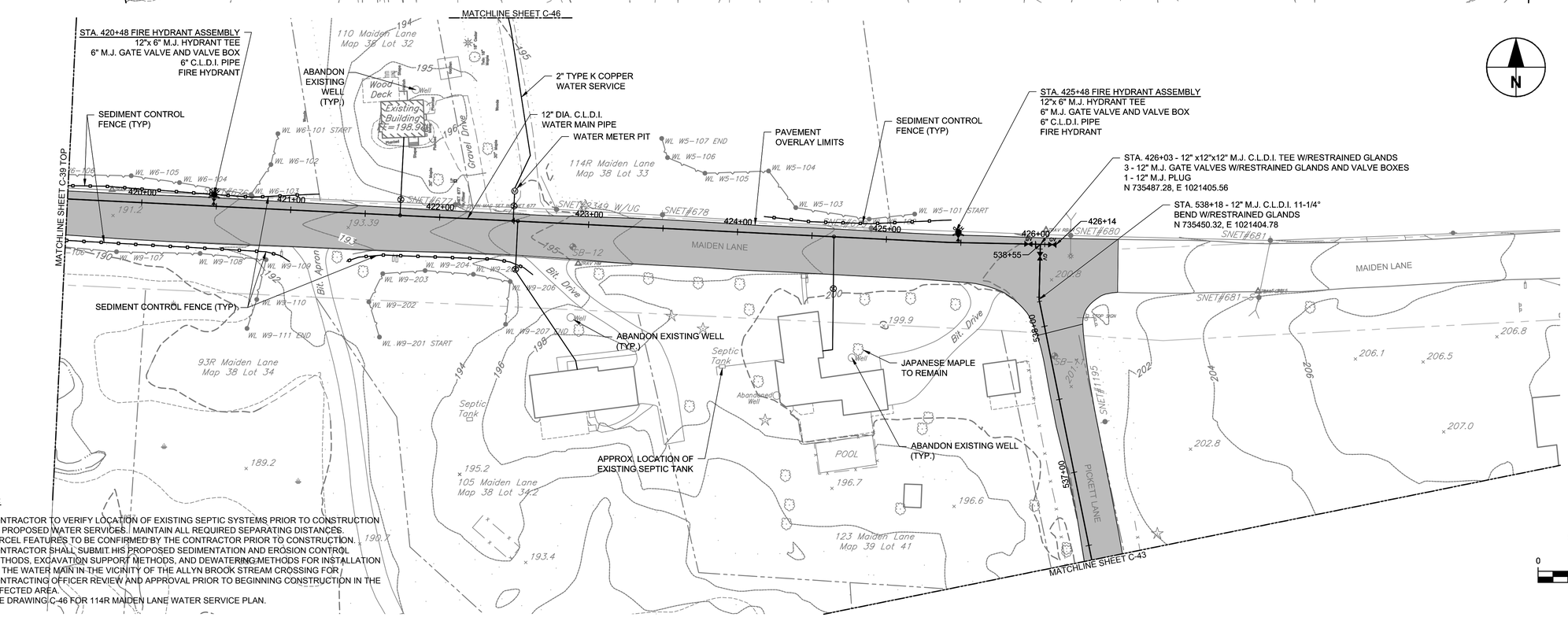

NOTES:

1. CONTRACTOR TO VERIFY LOCATION OF EXISTING SEPTIC SYSTEMS PRIOR TO CONSTRUCTION OF PROPOSED WATER SERVICES. MAINTAIN ALL REQUIRED SEPARATING DISTANCES.
2. PARCEL FEATURES TO BE CONFIRMED BY THE CONTRACTOR PRIOR TO CONSTRUCTION.
3. CONTRACTOR SHALL SUBMIT HIS PROPOSED SEDIMENTATION AND EROSION CONTROL METHODS, EXCAVATION SUPPORT METHODS, AND DEWATERINGMETHODS FOR INSTALLATION OF THE WATER MAIN IN THE VICINITY OF THE ALLYN BROOK STREAM CROSSING FOR CONTRACTING OFFICER REVIEW AND APPROVAL PRIOR TO BEGINNING CONSTRUCTION IN THE AFFECTED AREA.
4. SEE DRAWING C-46 FOR 114R MAIDEN LANE WATER SERVICE PLAN.

SCALE: 1" = 40'

0 40' 80'

100% SUBMITTAL

MARK	DATE	MADE BY	CHECKED	DESCRIPTION

REVISIONS

AECOM
AECOM, INC.
50 MYRICK STREET DRIVE
ROCKY HILL, CT 06067
PHONE (860) 243-5000

EPA CONTRACT NO. EP-S1-06-01
DURHAM MEADOWS WATERLINE RD.
DURHAM AND MIDDLETOWN, CONNECTICUT
TASK ORDER NO. 0060-RD-RD-01D5

TOWN OF DURHAM

PLAN - MAIDEN LANE

STA. 409+50 TO STA. 426+14 & STA. 536+40 TO STA. 538+55

PROJECT NO:	60275749
CAD DWG FILE:	CZ-DUR-039
DESIGNED BY:	KPR
DRAWN BY:	KPR
DEPT CHECK:	GRS
PROJ CHECK:	RMB
DATE:	APRIL 2018
SCALE:	AS NOTED

C-39

ANSI D – 22-Mar-18

ANSI D – 29-Jan-18

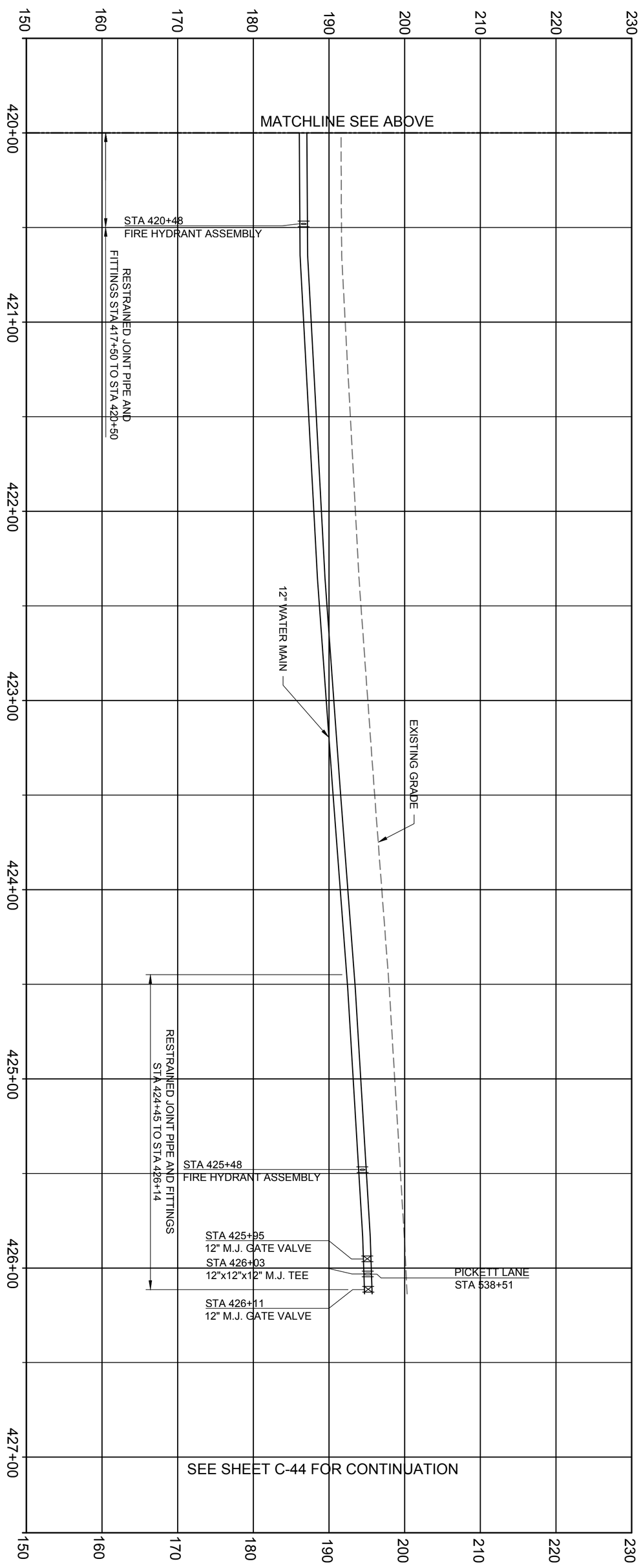

MAIDEN LANE PROFILE VIEW

STA. 420+00 TO STA. 426+14

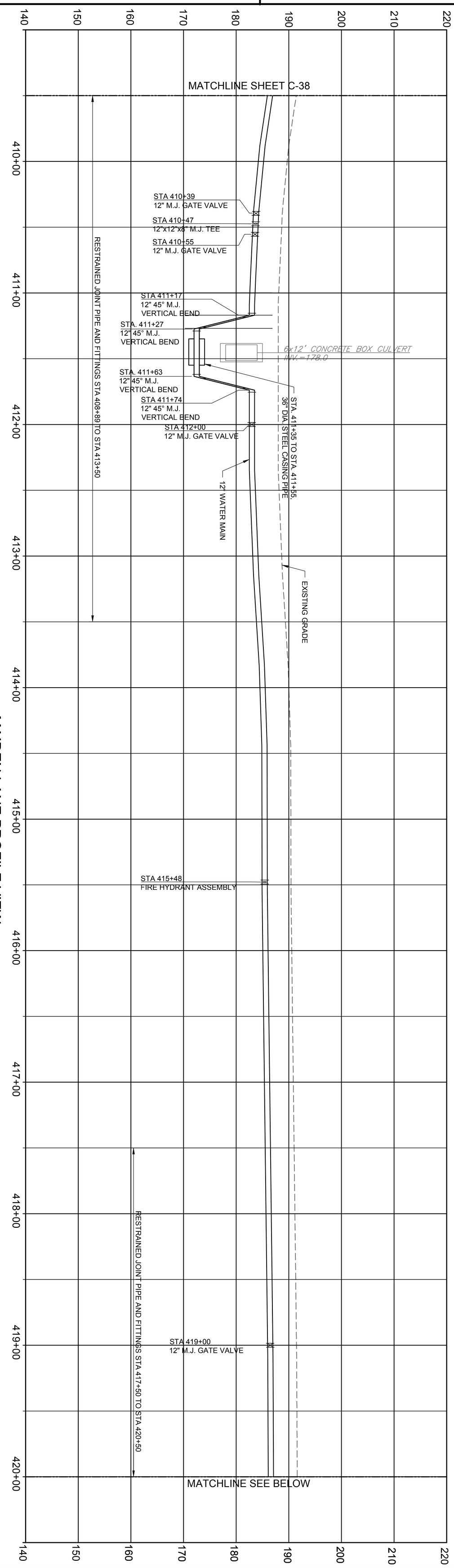

MAIDEN LANE PROFILE VIEW

STA. 409+50 TO STA. 420+00

HORIZONTAL

1" = 40'

0 40' 80'

VERTICAL

1" = 10'

0 10' 20'

SCALES

PROJECT NO:	60275749
CAD DWG FILE:	CZ-DUR-040
DESIGNED BY:	NAV
DRAWN BY:	NAV
DEPT CHECK:	GRS
PROJ CHECK:	MWM
DATE:	APRIL 2018
SCALE:	AS NOTED

C-40

EPA CONTRACT NO. EP-S1-06-01
DURHAM MEADOWS WATERLINE RD
DURHAM AND MIDDLETOWN, CONNECTICUT
TASK ORDER NO. 0060-RD-RD-01D5

TOWN OF DURHAM

PROFILE - MAIDEN LANE

STA 409+50 TO STA. 426+14

STATE OF CONNECTICUT · DENNIS G. SETTA · No. 12027 · LICENSED PROFESSIONAL ENGINEER

AECOM

AECOM, INC.
500 ENTERPRISE DRIVE
ROCKY HILL, CT 06067
PHONE (860) 263-5800

100% SUBMITTAL

MARK	DATE	MADE BY	CHECKED	DESCRIPTION

REVISIONS

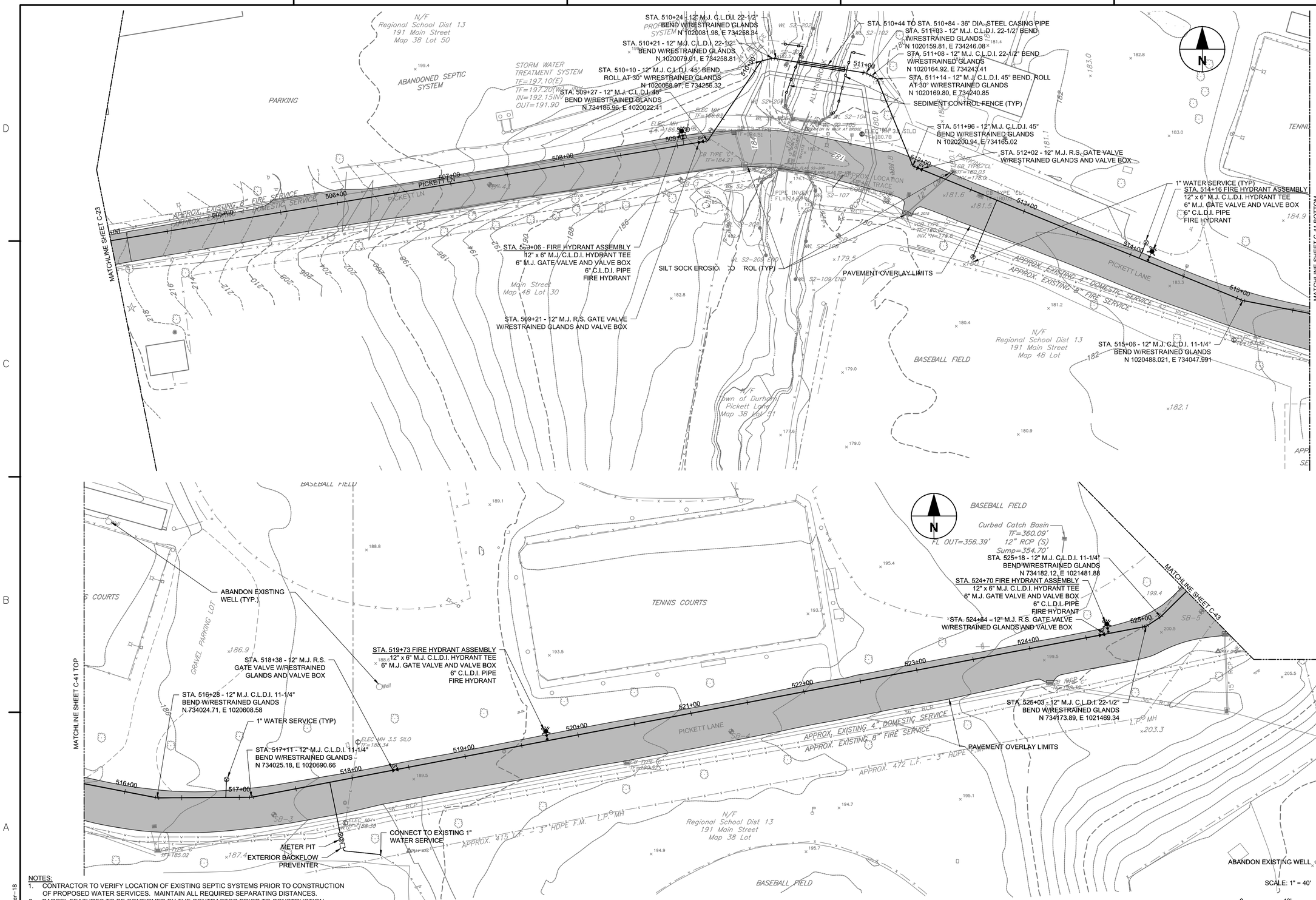

NOTES:
1. CONTRACTOR TO VERIFY LOCATION OF EXISTING SEPTIC SYSTEMS PRIOR TO CONSTRUCTION OF PROPOSED WATER SERVICES. MAINTAIN ALL REQUIRED SEPARATING DISTANCES.
2. PARCEL FEATURES TO BE CONFIRMED BY THE CONTRACTOR PRIOR TO CONSTRUCTION.
3. CONTRACTOR SHALL SUBMIT HIS PROPOSED SEDIMENTATION AND EROSION CONTROL METHODS, EXCAVATION SUPPORT METHODS, AND DEWATERING METHODS FOR INSTALLATION OF THE WATER MAIN IN THE VICINITY OF THE ALLYN BROOK STREAM CROSSING FOR CONTRACTING OFFICER REVIEW AND APPROVAL PRIOR TO BEGINNING CONSTRUCTION IN THE AFFECTED AREA.

ANSI D – 22-Mar-18

MARK	DATE	MADE BY	CHECKED	DESCRIPTION
				100% SUBMITTAL

REVISIONS

AECOM
AECOM, INC.
500 SOUTH MAIN STREET, SUITE 200
ROCKY HILL, CT 06067
PHONE (860) 263-3000

EPA CONTRACT NO. EP-S1-06-01
DURHAM MEADOWS WATERLINE RD
DURHAM AND MIDDLETOWN, CONNECTICUT
TASK ORDER NO. 0060-RD-RD-0105

TOWN OF DURHAM
PLAN - PICKETT LANE
STA. 504+00 TO STA. 525+50

PROJECT NO:	60275749
CAD DWG FILE:	CZ-DUR-041
DESIGNED BY:	NAV
DRAWN BY:	NAV
DEPT CHECK:	GRS
PROJ CHECK:	RMB
DATE:	APRIL 2018
SCALE:	AS NOTED

C-41

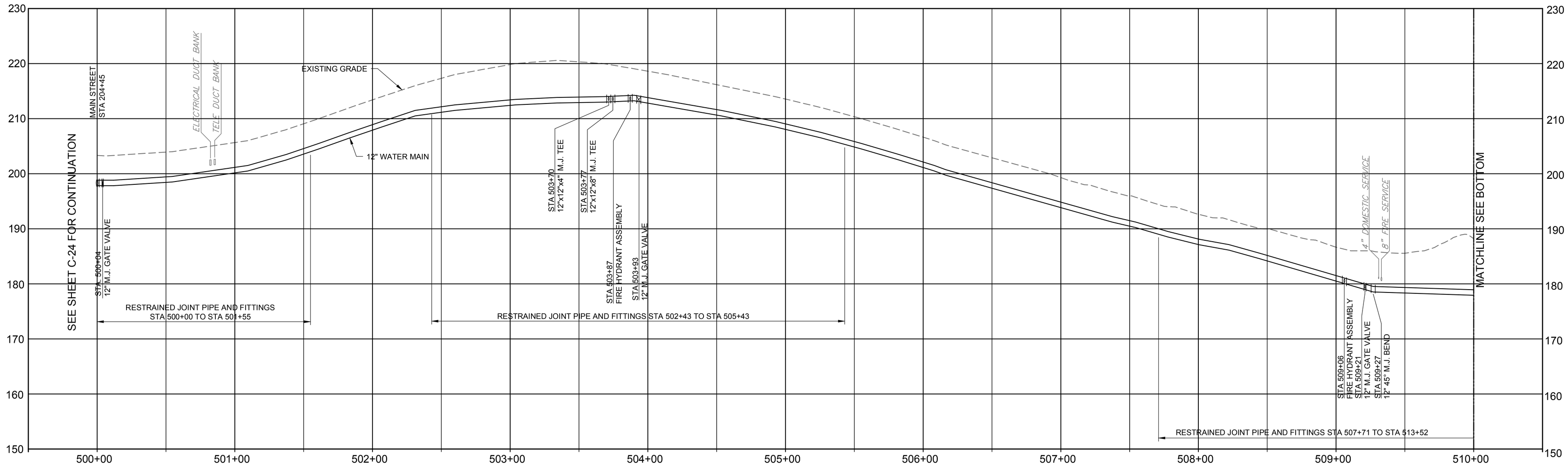

PICKETT LANE PROFILE VIEW

STA. 500+00 TO STA. 510+00

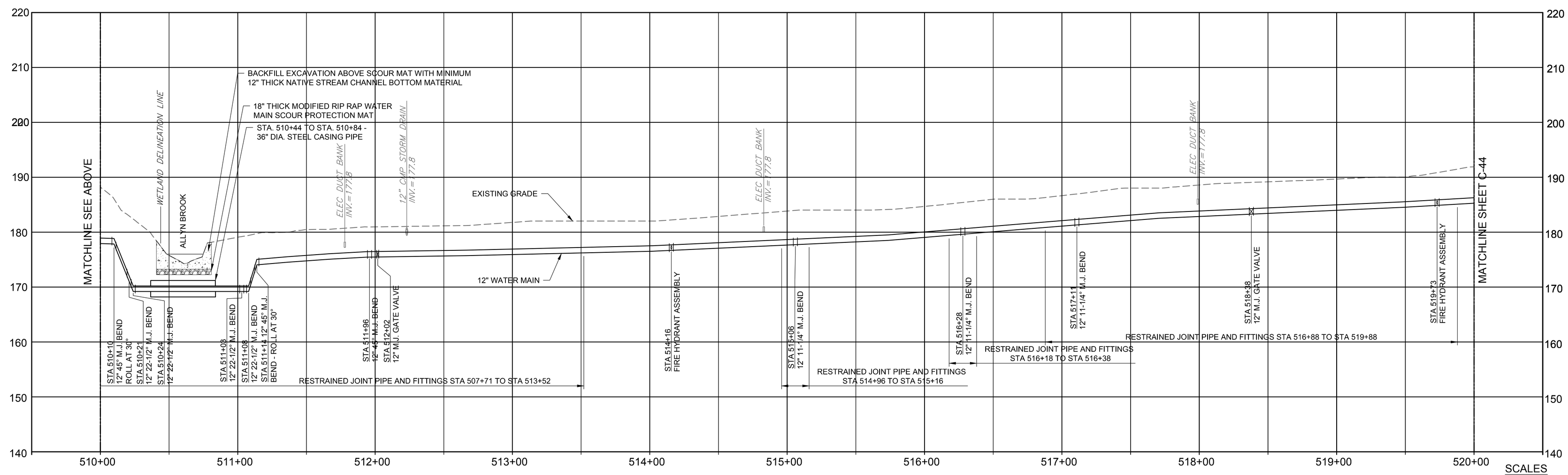

PICKETT LANE PROFILE VIEW

STA. 510+00 TO STA. 520+00

SCALES

HORIZONTAL 0 40' 80' 1" = 40'

VERTICAL 0 10' 20' 1" = 10'

MARK	DATE	MADE BY	CHECKED	DESCRIPTION
				100% SUBMITTAL

REVISIONS

AECOM

AECOM, INC.
50 MILLSTONE ROAD DRIVE
ROCKY HILL, CT 06067
PHONE (860) 263-3000

EPA CONTRACT NO. EP-S1-06-01
DURHAM MEADOWS WATERLINE RD
DURHAM AND MIDDLETOWN, CONNECTICUT
TASK ORDER NO. 0060-RD-RD-01D5

TOWN OF DURHAM

PROFILE - PICKETT LANE

STA. 500+00 TO STA. 520+00

PROJECT NO:	60275749
CAD DWG FILE:	CZ-DUR-042
DESIGNED BY:	NAV
DRAWN BY:	NAV
DEPT CHECK:	GRS
PROJ CHECK:	MWM
DATE:	APRIL 2018
SCALE:	AS NOTED

C-42

ANSI D – 29-Jan-18

ABANDON EXISTING WELL

KORN ELEMENTARY SCHOOL

RESTRAIN 25' OF EXISTING PIPE WITH SPLIT BELL RESTRAINT HARNESSES

4" RESTRAINED JOINT C.L.D.I. DOMESTIC SERVICE CONNECT TO EXISTING LINE

STA. 530+35 - 12"x12"x4" M.J. TEE W/RESTRAINED GLANDS
1 - 4" M.J. R.S. GATE VALVE AND VALVE BOX WITH RESTRAINED GLANDS
1 - 4" M.J. D.I. TEMPORARY PLUG
2 - 45° M.J. BENDS W/ RESTRAINED GLANDS
1 - 4" M.J. SOLID SLEEVE W/ RESTRAINED GLANDS (DOMESTIC SERVICE)

8" RESTRAINED JOINT C.L.D.I. FIRE SERVICE CONNECT TO EXISTING LINE

8" GATE VALVE W/ POST INDICATOR AND RESTRAINED GLANDS

STA. 530+60 - 12"x12"x8" M.J. TEE W/RESTRAINED GLANDS
1 - 8" M.J. R.S. GATE VALVE AND VALVE BOX WITH RESTRAINED GLANDS
1 - 8" M.J. D.I. TEMPORARY PLUG
2 - 45° M.J. BENDS W/ RESTRAINED GLANDS
1 - 8" M.J./SOLID SLEEVE W/ RESTRAINED GLANDS (FIRE SERVICE)

STA. 530+90 - 12" M.J. R.S. GATE VALVE W/RESTRAINED GLANDS AND VALVE BOX

STA. 525+75 - 12" x 4" M.J. C.L.D.I. TEE W/RESTRAINED GLANDS
4" M.J. GATE VALVE W/ RESTRAINED GLANDS AND VALVE BOX
N 734221.75, E 1021522.11

STA. 525+80 - 12" 45° M.J. BEND W/RESTRAINED GLANDS
N 734225.26, E 1021525.6

STA. 526+00 - 12" M.J. R.S. GATE VALVE W/RESTRAINED GLANDS AND VALVE BOX

STA. 529+84 FIRE HYDRANT ASSEMBLY
12"x 6" M.J. HYDRANT TEE
6" M.J. GATE VALVE AND VALVE BOX
6" C.L.D.I. PIPE
FIRE HYDRANT

MATCHLINE SHEET C-41 BOTTOM

MATCHLINE SHEET C-39 BOTTOM

ABANDON EXISTING WELL (TYP.)

STA. 534+30 FIRE HYDRANT ASSEMBLY
12"x 6" M.J. HYDRANT TEE
6" M.J. GATE VALVE AND VALVE BOX
6" C.L.D.I. PIPE
FIRE HYDRANT

STA. 534+60 - 12" M.J. R.S. GATE VALVE W/RESTRAINED GLANDS AND VALVE BOX
N 735099.06, E 1021475.78

SEDIMENT CONTROL FENCE (TYP)

SILT SOCK (TYP)

4" RESTRAINED JOINT C.L.D.I. WATER SERVICE MAIN

4" M.J. C.L.D.I. 45° BEND W/RESTRAINED GLANDS
N 734153.86, E 1021588.97

WATER METER VAULT - SEE DETAIL SHEET C-503

CONNECT TO EXISTING SERVICE WITH 4" M.J. SOLID SLEEVE W/ RESTRAINED GLANDS

PAVEMENT MILLING AND OVERLAY LIMITS

STA. 529+56 - 12"x12"x8" M.J. TEE W/RESTRAINED GLANDS
1 - 8" M.J. R.S. GATE VALVE AND VALVE BOX WITH RESTRAINED GLANDS (FIRE SERVICE)

STA. 529+64 - 12"x12"x4" M.J. TEE W/RESTRAINED GLANDS
1 - 4" M.J. R.S. GATE VALVE AND VALVE BOX WITH RESTRAINED GLANDS (DOMESTIC SERVICE)

SEDIMENT CONTROL FENCE (TYP)

STA. 531+52 & STA. 531+57 - 12" M.J. 45° VERTICAL BEND W/RESTRAINED GLANDS

8" RESTRAINED JOINT C.L.D.I. FIRE SERVICE

4" RESTRAINED JOINT C.L.D.I. DOMESTIC SERVICE

FIRE HYDRANT ASSEMBLY
8"x6" M.J. HYDRANT W/ TEE
6" M.J. GATE VALVE W/ RESTRAINED GLANDS
6" C.L.D.I. M.J. 90° BEND W/ RESTRAINED GLANDS
6" C.L.D.I. PIPE
FIRE HYDRANT

STA. 551+78 - 8" GATE VALVE WITH POST INDICATOR AND RESTRAINED GLANDS

DRIVEWAY PAVEMENT REPAIR SEE TEMORARY TRENCH PAVEMENT DETAIL SHEET C-505

STA. 552+63 - 8"x8"x8" M.J. TEE W/RESTRAINED GLANDS
3 - 8" M.J. R.S. GATE VALVES AND VALVE BOXES WITH RESTRAINED GLANDS
2 - 8" 45° M.J. BENDS W/ RESTRAINED GLANDS
1 - 8" 90° M.J. BEND W/ RESTRAINED GLANDS (FIRE SERVICE)

1 - 4"x4"x4" M.J. TEE W/RESTRAINED GLANDS
3 - 4" M.J. R.S. GATE VALVES AND VALVE BOXES WITH RESTRAINED GLANDS (DOMESTIC SERVICE)

8" RESTRAINED JOINT C.L.D.I. FIRE SERVICE

4" RESTRAINED JOINT C.L.D.I. DOMESTIC SERVICE

TEMPORARY RESTRAINED M.J. TAPPED PLUG

MATCHLINE A - A THIS SHEET

CONVERT EXISTING WELL TO MONITORING WELL (REFER TO SPECIFICATION SECTION 02521)

SCALE: 1" = 40'

0 40' 80'

NOTES:

1. CONTRACTOR TO VERIFY LOCATION OF EXISTING SEPTIC SYSTEMS PRIOR TO CONSTRUCTION OF PROPOSED WATER SERVICES. MAINTAIN ALL REQUIRED SEPARATING DISTANCES.
2. PARCEL FEATURES TO BE CONFIRMED BY THE CONTRACTOR PRIOR TO CONSTRUCTION.
3. WATER SERVICE CONNECTIONS MUST BE COORDINATED WITH THE CONTRACTING OFFICER AND SCHOOL FACILITIES.
4. REFER TO DRAWING C-501 FOR HIGH SCHOOL FIRE SERVICE PROFILE.

ANSI D – 22-Mar-18

MARK	DATE	MADE BY	CHECKED	DESCRIPTION
				100% SUBMITTAL

REVISIONS

AECOM, INC.
500 SOUTH MAIN STREET, DRIVE
ROCKY HILL, CT 06067
PHONE (860) 263-3000

AECOM

EPA CONTRACT NO. EP-S1-06-01
DURHAM MEADOWS WATERLINE RD.
DURHAM AND MIDDLETOWN, CONNECTICUT
TASK ORDER NO. 0060-RD-RD-01D5

TOWN OF DURHAM

PLAN - PICKETT LANE

STA. 525+50 TO STA. 536+40

PROJECT NO:	60275749
CAD DWG FILE:	CZ-DUR-043
DESIGNED BY:	NAV
DRAWN BY:	NAV
DEPT CHECK:	GRS
PROJ CHECK:	RMB
DATE:	APRIL 2018
SCALE:	AS NOTED

C-43

ANSI D – 5-Feb-18

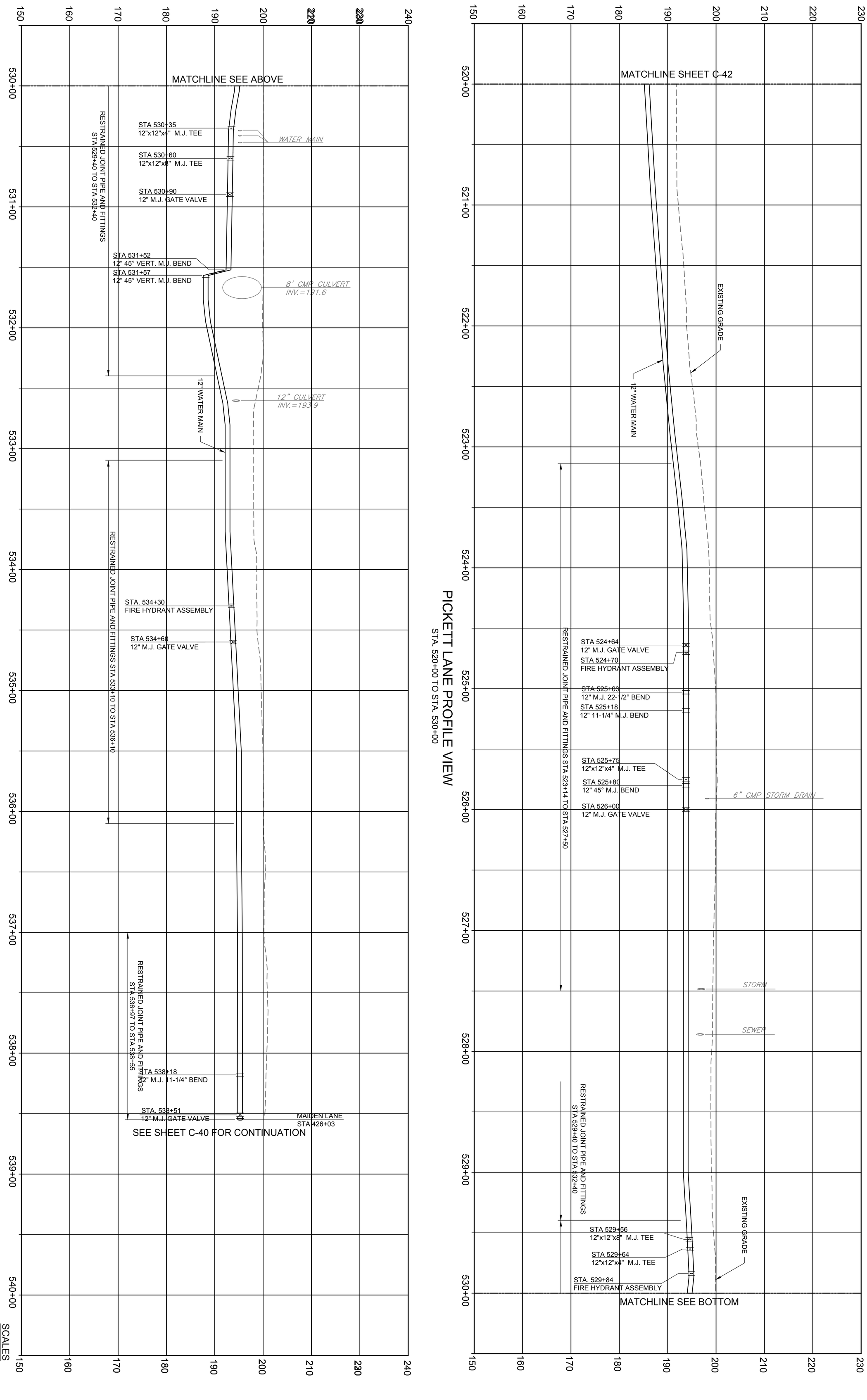

PROJECT NO:	60275749
CAD DWG FILE:	CZ-DUR-044
DESIGNED BY:	NAV
DRAWN BY:	NAV
DEPT CHECK:	GRS
PROJ CHECK:	MWM
DATE:	APRIL 2018
SCALE:	AS NOTED

C-44

EPA CONTRACT NO. EP-S1-06-01
DURHAM MEADOWS WATERLINE RD
DURHAM AND MIDDLETOWN, CONNECTICUT
TASK ORDER NO. 0060-RD-RD-01D5

TOWN OF DURHAM
PROFILE - PICKETT LANE

STA. 520+00 TO STA. 538+55

STATE OF CONNECTICUT · DENNIS G. BETTENCOURT · No. 12027 · LICENSED PROFESSIONAL ENGINEER

AECOM

AECOM, INC.
500 ENTERPRISE DRIVE
ROCKY HILL, CT 06067
PHONE (860) 263-5800

MARK	DATE	MADE BY	CHECKED	DESCRIPTION
				100% SUBMITTAL

REVISIONS

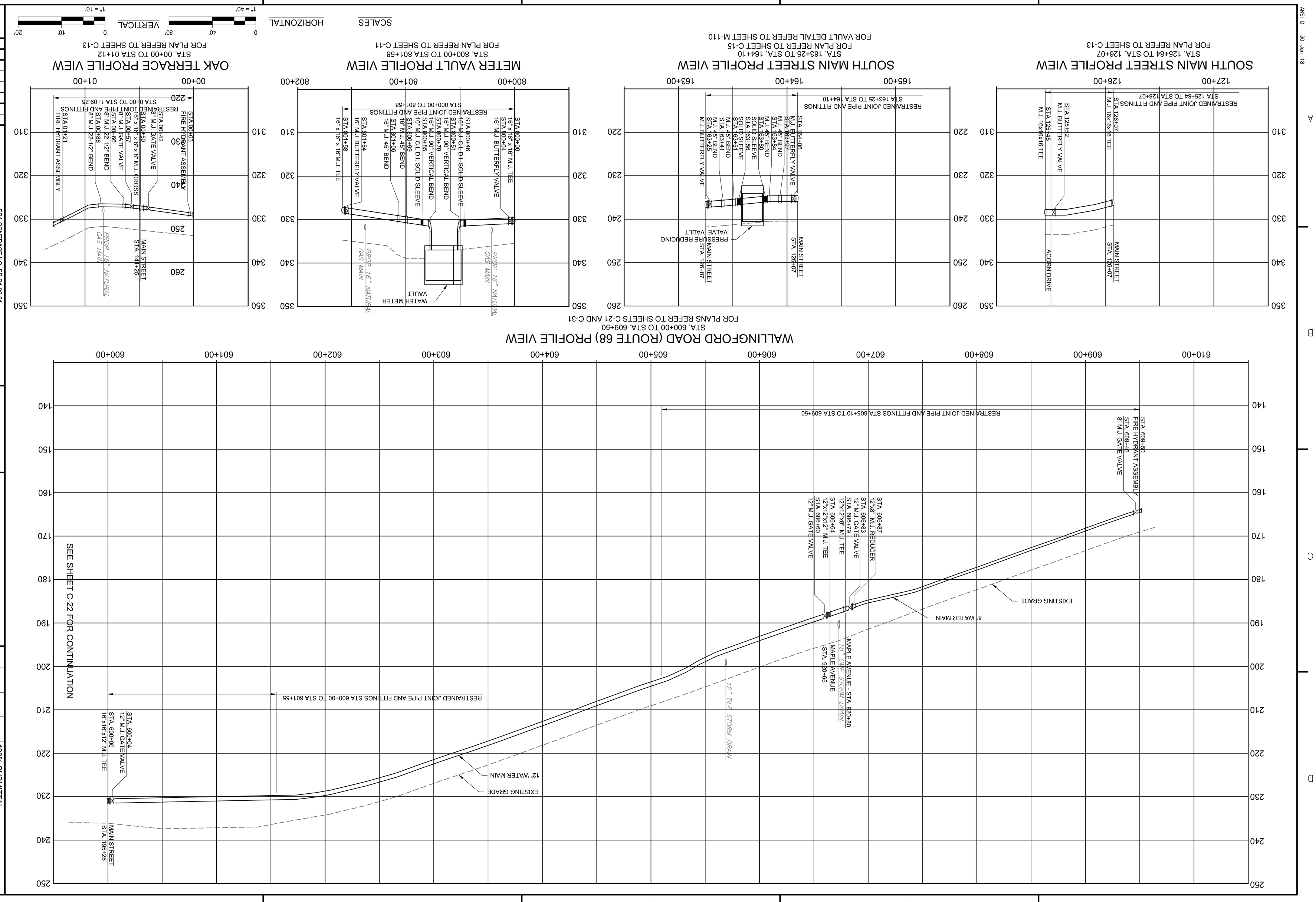

ANSI D – 30-Jun-18

PROJECT NO: 60275749
CAD DWG FILE: C2-DUR-045
DESIGNED BY: NAV
DRAWN BY: NAV
DEPT CHECK: GRS
PROJ CHECK: RMB
DATE: APRIL 2018
SCALE:

C-45

EPA CONTRACT NO. EP-S1-06-01
DURHAM MEADOWS WATERLINE RD
DURHAM AND MIDDLETOWN, CONNECTICUT
TASK ORDER NO. 0068-RD-RD-0105

TOWN OF DURHAM
PROFILES - MISCELLANEOUS

AECOM
AECOM INC.
300 ENTERPRISE DRIVE
ROCKY HILL, CT 06067
PHONE: (860) 210-5300

100% SUBMITTAL

MARK	DATE	MADE BY	CHECKED	DESCRIPTION

REVISIONS

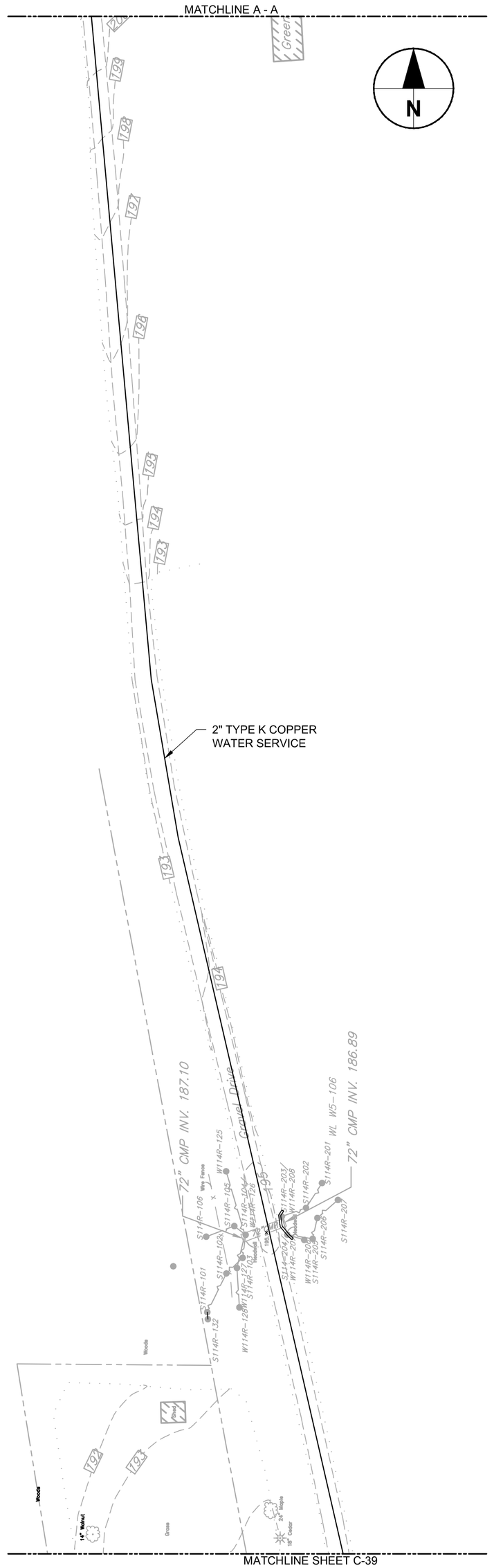

114R MAIDEN LANE WATER SERVICE PLAN

FOR CONTINUATION REFER TO SHEET C-39

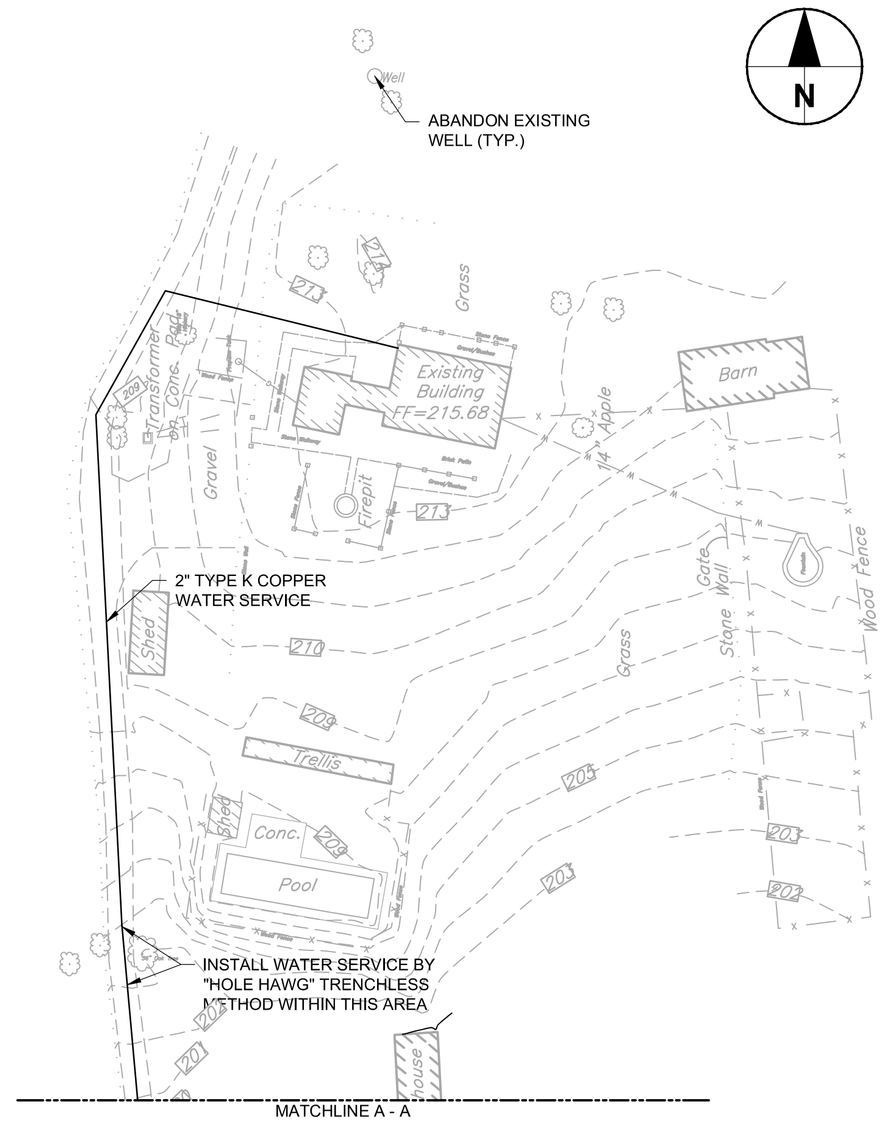

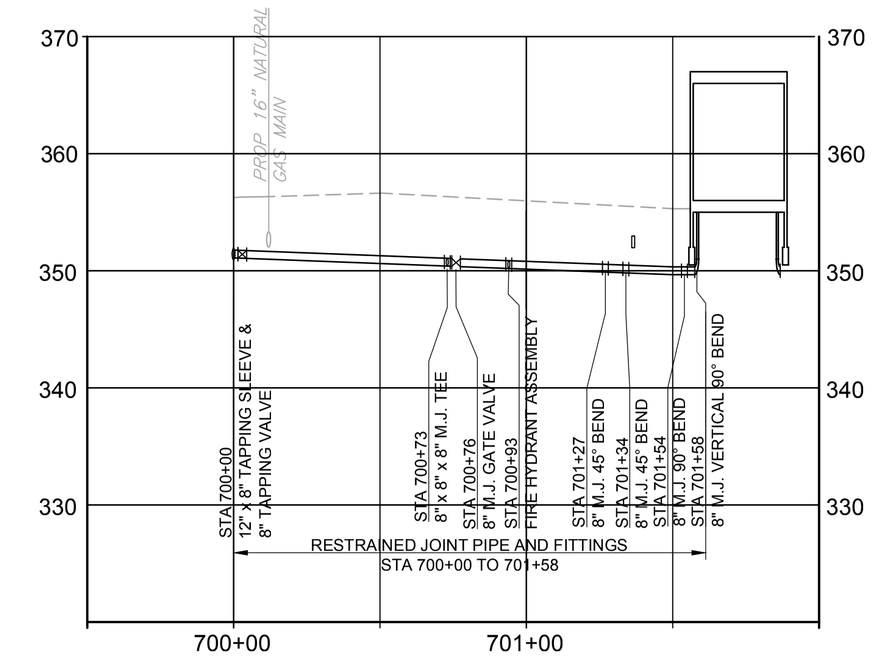

TALCOTT RIDGE BOOSTER STATION SUCTION PROFILE

STA. 700+00 TO STA. 701+33
FOR PLAN REFER TO SHEET C-9

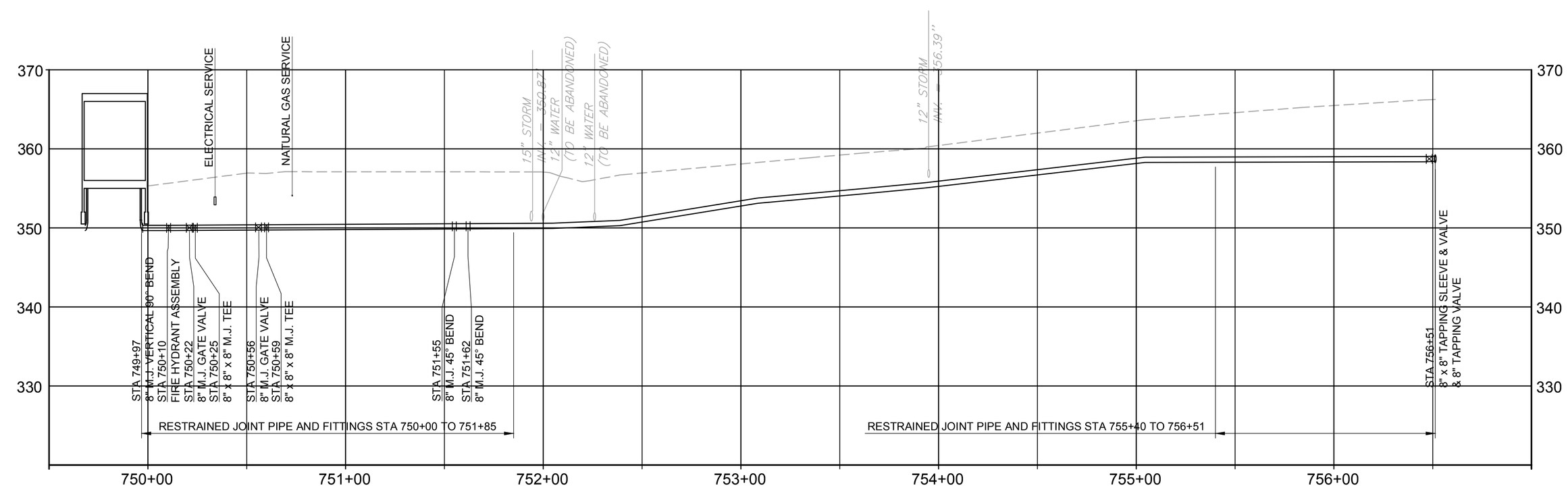

TALCOTT RIDGE BOOSTER STATION DISCHARGE PROFILE

STA. 750+00 TO STA. 756+51
FOR PLAN REFER TO SHEET C-9

SCALES — HORIZONTAL 1" = 40' (0, 40', 80') — VERTICAL 1" = 10' (0, 10', 20')

MARK	DATE	MADE BY	CHECKED	DESCRIPTION
				100% SUBMITTAL

REVISIONS

AECOM, INC.
500 NORTH MAIN STREET, SUITE 201
ROCKY HILL, CT 06067
PHONE (860) 263-3800

EPA CONTRACT NO. EP-S1-06-01
DURHAM MEADOWS WATERLINE RD
DURHAM AND MIDDLETOWN, CONNECTICUT
TASK ORDER NO. 0060-RD-RD-01D5

TOWN OF DURHAM
PROFILES - MISCELLANEOUS

PROJECT NO:	60275749
CAD DWG FILE:	CZ-DUR-046
DESIGNED BY:	NAV
DRAWN BY:	NAV
DEPT CHECK:	GRS
PROJ CHECK:	RMB
DATE:	APRIL 2018
SCALE:	

C-46

ANSI D – 4-May-18

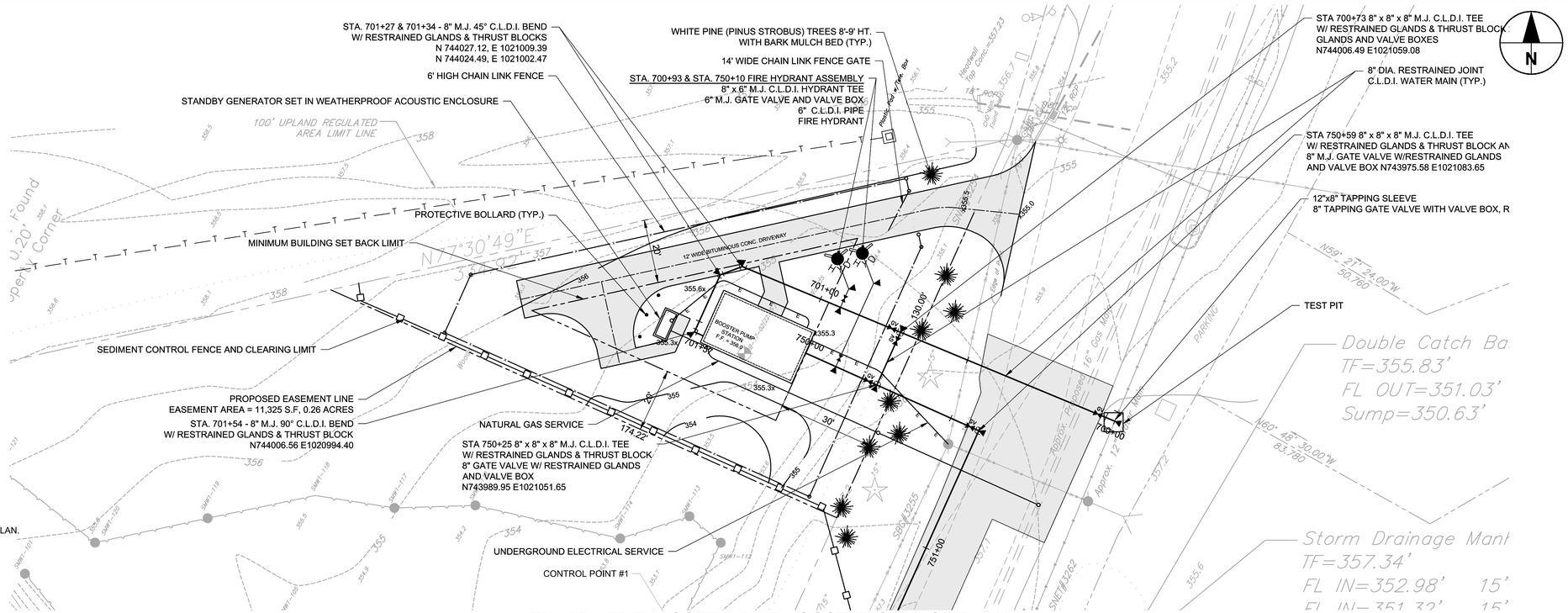

NOTES:

1. REFER TO DRAWING C-09 FOR BOOSTER STATION OVERALL PLAN.

ENLAR□ED TALCOTT RID□E □OOSTER STATION PLAN

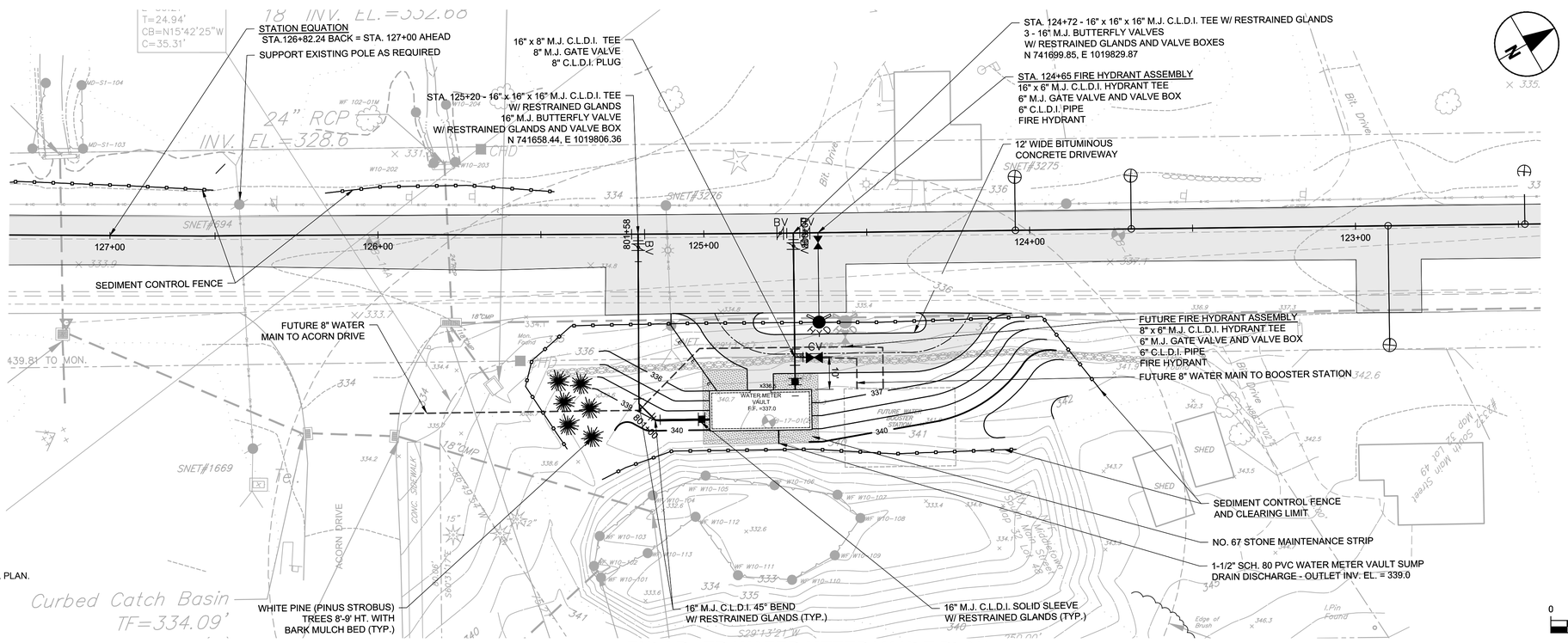

NOTES:

1. REFER TO DRAWING C-11 FOR WATER METER VAULT OVERALL PLAN.

ENLAR□ED WATER METER VAULT PLAN

SCALE: 1" = 20'

0 20' 40'

MARK	DATE	MADE BY	CHECKED	DESCRIPTION
				100% SUBMITTAL

REVISIONS

AECOM, INC.
500 NORTH MAIN STREET, SUITE 201
ROCKY HILL, CT 06067
PHONE (860) 263-3800

AECOM

EPA CONTRACT NO. EP-S1-06-01
DURHAM MEADOWS WATERLINE RD
DURHAM AND MIDDLETOWN, CONNECTICUT
TASK ORDER NO. 0060-RD-RD-01D5

ENLARGED SITE PLANS
BOOSTER STATION AND METER VAULT

PROJECT NO:	60275749
CAD DWG FILE:	CZ-DUR-47
DESIGNED BY:	KPR
DRAWN BY:	NAV
DEPT CHECK:	GRS
PROJ CHECK:	RMB
DATE:	APRIL 2018
SCALE:	AS NOTED

C-47

ANSI D – 4-May-18

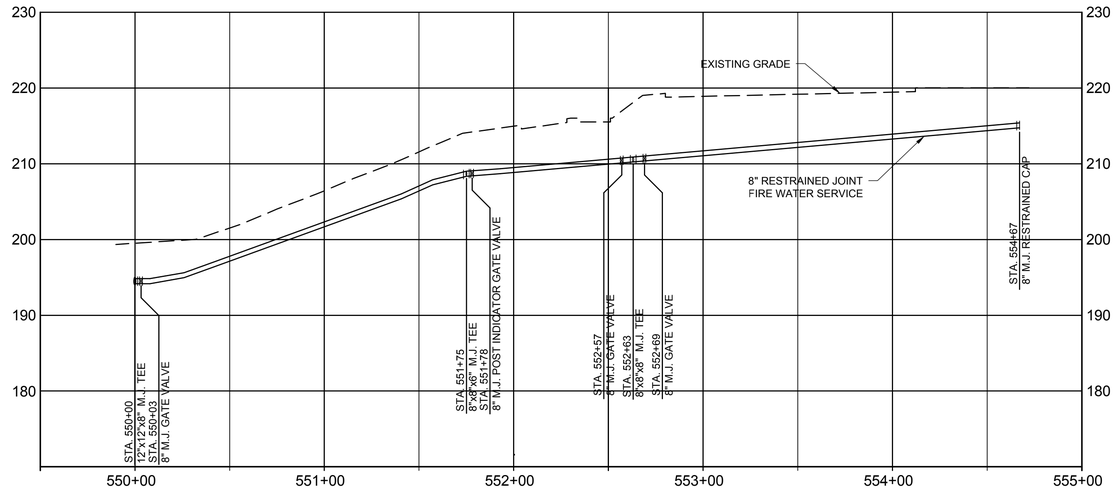

HIGH SCHOOL FIRE WATER SERVICE PROFILE VIEW

STA. 550+00 TO STA. 554+67
FOR PLAN REFER TO SHEET C-43

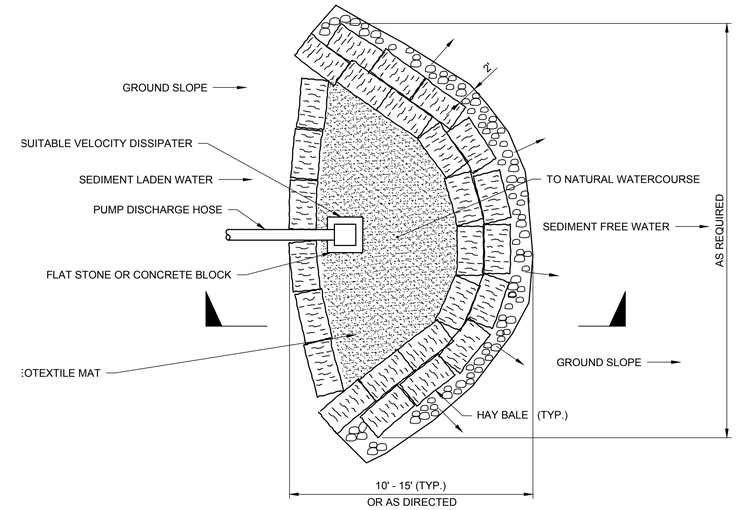

PLAN

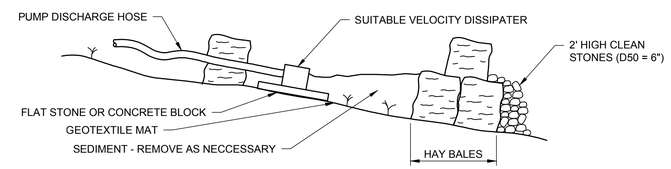

SECTION

SEDIMENT TRAP DETAIL

NOT TO SCALE

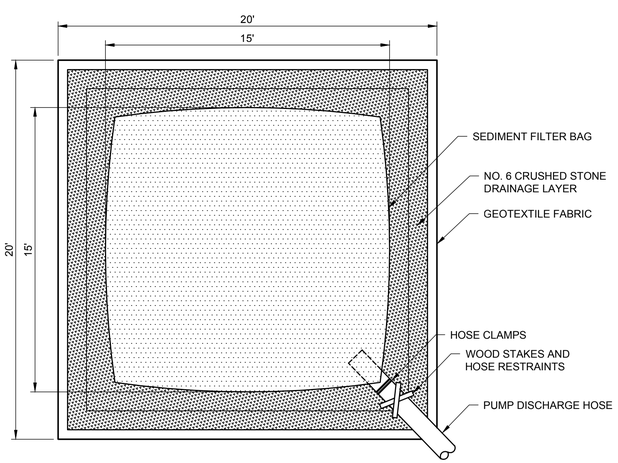

PLAN

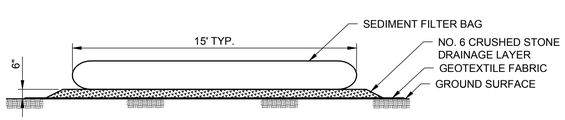

SECTION

NOTES:
1. ONE DISCHARGE HOSE PER FILTER BAG.
2. CONTRACTOR TO REMOVE FILTER BAG AND ACCUMULATED SEDIMENT UPON PROJECT COMPLETION.

SEDIMENT FILTER BAG DETAIL

NOT TO SCALE

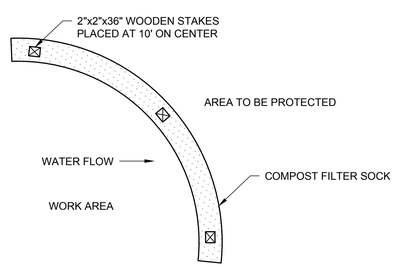

PLAN

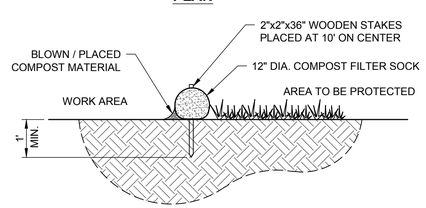

SECTION

COMPOST SILT SOCK EROSION BARRIER DETAIL

NOT TO SCALE

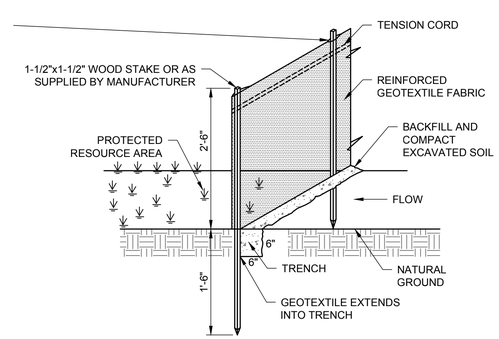

SEDIMENT CONTROL FENCE DETAIL

NOT TO SCALE

EROSION AND SEDIMENTATION CONTROL NOTES:

1. SOIL EROSION AND SEDIMENTATION CONTROL MEASURES SHALL CONFORM TO THE *"2002 CONNECTICUT GUIDELINES FOR SOIL EROSION AND SEDIMENT CONTROL"*, AS AMENDED.
2. EROSION AND SEDIMENTATION MEASURES SHALL BE IN PLACE PRIOR TO COMMENCEMENT OF CONSTRUCTION ACTIVITIES AND SHALL BE MAINTAINED UNTIL ALL DISTURBED AREAS HAVE BEEN PERMANENTLY STABILIZED.
3. EROSION AND SEDIMENTATION CONTROL MEASURES SHALL BE CHECKED AT LEAST ONCE PER WEEK AND WITHIN 24 HOURS OF THE END OF A PRECIPITATION EVENT OF 0.5 INCHES OF RAIN OR GREATER TO ASSESS MAINTENANCE NEEDS. ANY MAINTENANCE NEEDS FOUND SHALL BE IMMEDIATELY ADDRESSED.
4. THE CONTRACTOR SHALL MONITOR FOR AND CONTROL AIRBORNE CONTAMINANTS AND DUST DURING CONSTRUCTION ACTIVITIES.
5. THE CONTRACTOR SHALL PROVIDE INTERIM EROSION AND SEDIMENTATION CONTROL MEASURES AT ACTIVE WORK ZONES.
6. ALL DISTURBED AREAS THAT WILL BE EXPOSED FOR A PERIOD GREATER THAN ONE MONTH SHALL HAVE TEMPORARY VEGETATION ESTABLISHED.
7. ALL MATERIAL STOCKPILE AREAS SHALL BE PROTECTED WITH SEDIMENT CONTROL FENCE OR HAY BALES.
8. VEHICLE OR CONSTRUCTION EQUIPMENT REFUELING IS PROHIBITED WITHIN 100 FEET OF ANY WETLAND, WATERCOURSE, OR WATER BODY.
9. DISCHARGE OF DEWATERING DISCHARGES DIRECTLY TO DRAINAGE SYSTEMS, WETLANDS, WATERCOURSES, OR WATER BODIES IS PROHIBITED.

MARK	DATE	MADE BY	CHECKED	DESCRIPTION
				100% SUBMITTAL

REVISIONS

AECOM
AECOM, INC.
50 MYRTLE ROCK DRIVE
ROCKY HILL, CT 06067
PHONE (860) 263-5000

EPA CONTRACT NO. EP-S1-06-01
DURHAM MEADOWS WATERLINE RD
DURHAM AND MIDDLETOWN, CONNECTICUT
TASK ORDER NO. 0060-RD-RD-01D5

EROSION AND SEDIMENTATION CONTROL DETAILS

CIVIL

PROJECT NO:	60275749
CAD DWG FILE:	CZDUR501
DESIGNED BY:	MCC
DRAWN BY:	MCC
DEPT CHECK:	GRS
PROJ CHECK:	MWM
DATE:	APRIL 2018
SCALE:	AS NOTED

C-501

ANSI D – 26-Jan-18

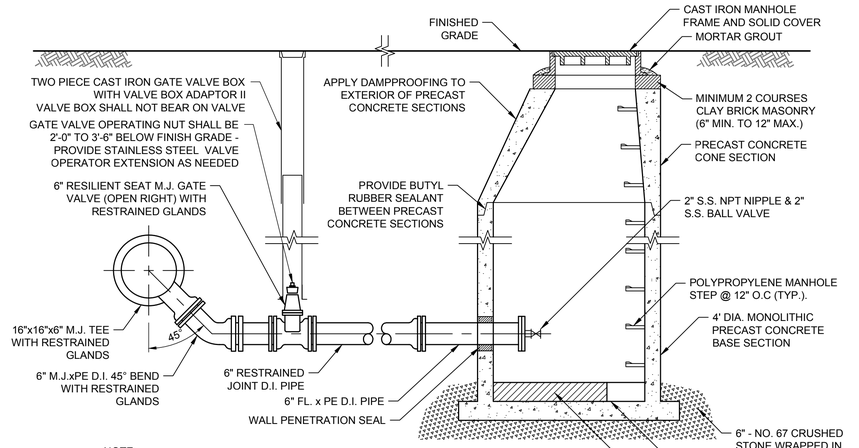

NOTE:
1. THE CAST IRON VALVE BOX SHALL NOT BE IN CONTACT WITH THE VALVE UNDER ANY CIRCUMSTANCES.
2. COMPACT STONE BEDDING TO A MINIMUM OF 98% MAXIMUM DENSITY.
3. MANUAL WATER MAIN DRAIN ASSEMBLY INCLUDES 16"x16"x6" TEE, 6" BEND, 6" GATE VALVE, PIPE, MANHOLE, FITTINGS, JOINT RESTRAINTS, AND ALL ACCESSORIES AND APPURTENANCES.

MANUAL WATER MAIN DRAIN DETAIL

NOT TO SCALE

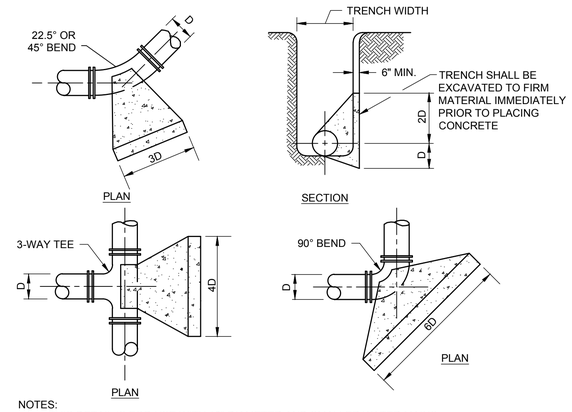

NOTES:
1. THIS DETAIL IS FOR USE WITH 12" DIAMETER AND SMALLER WATER MAINS.
2. THRUST BLOCK DIMENSIONS BASED ON A MAXIMUM ALLOWABLE WATER PRESSURE OF 125 PSI.
3. CONCRETE SHALL BEAR UPON SOIL IN A STABLE AND COMPACTED CONDITION.
4. THRUST BLOCKS ARE NOT AN ACCEPTABLE METHOD OF THRUST RESTRAINT IN MOST SITUATIONS, AND WILL ONLY BE PERMITTED IN SPECIAL SITUATIONS.

THRUST BLOCK DETAIL

NOT TO SCALE

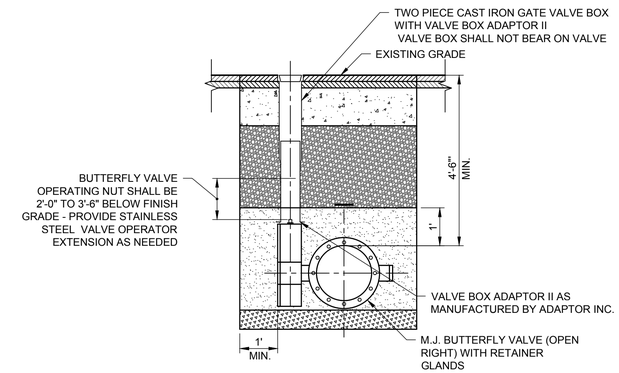

BUTTERFLY VALVE DETAIL

NOT TO SCALE

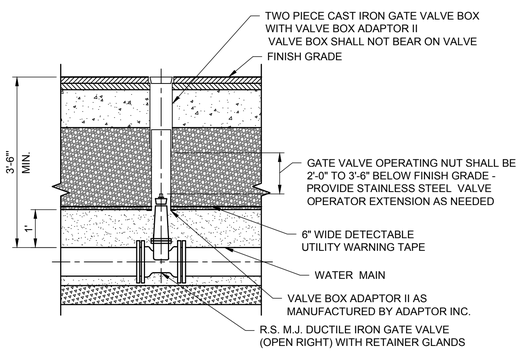

GATE VALVE DETAIL

NOT TO SCALE

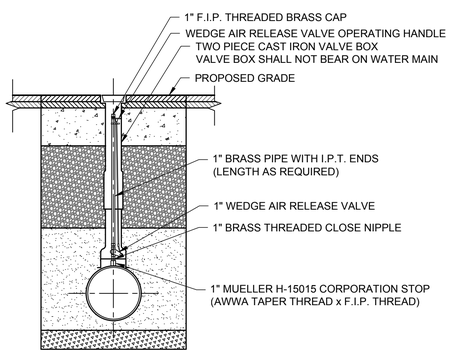

MANUAL AIR RELEASE VALVE DETAIL

NOT TO SCALE

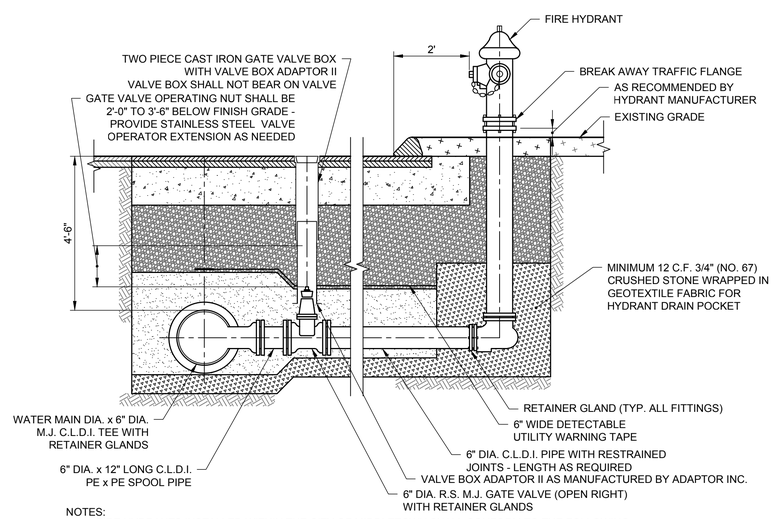

NOTES:
1. FIRE HYDRANTS INSTALLED WITHIN THE CITY OF MIDDLETOWN SHALL CONFORM TO THE FOLLOWING REQUIREMENTS:
   A. HYDRANTS SHALL BE MUELLER SUPER CENTURION 250 MODEL NO. A-421 (4-1/2" MAIN VALVE OPENING)
   B. MINIMUM BURY DEPTH: 5'-0" (COORDINATE WITH WATER MAIN SIZE)
   C. OPENING DIRECTION: OPEN LEFT (COUNTERCLOCKWISE)
   D. PROVIDE 1 - 4-1/2" PUMPER NOZZLE AND 2 - 2-1/2" HOSE NOZZLES
   E. HYDRANTS SHALL HAVE BONNET AND CAPS FACTORY COATED JOHN DEERE GREEN AND REMAINDER OF HYDRANT PAINTED JOHN DEERE YELLOW
2. FIRE HYDRANTS INSTALLED WITHIN THE TOWN OF DURHAM SHALL CONFORM TO THE FOLLOWING REQUIREMENTS:
   A. HYDRANTS SHALL BE MUELLER SUPER CENTURION 250 MODEL NO. A-423 (5-1/2" MAIN VALVE OPENING)
   B. MINIMUM BURY DEPTH: 5'-0" (COORDINATE WITH WATER MAIN SIZE)
   C. OPENING DIRECTION: OPEN RIGHT (CLOCKWISE)
   D. PROVIDE 1 - 4-1/2" PUMPER NOZZLE AND 2 - 2-1/2" HOSE NOZZLES
   E. HYDRANTS SHALL BE FACTORY COATED WITH A WHITE REFLECTIVE BONNET AND YELLOW BARREL. HYDRANTS SHALL BE PROVIDED WITH A STENCILED IDENTIFICATION LABEL IN ACCORDANCE WITH CONNECTICUT WATER COMPANY REQUIREMENTS.

FIRE HYDRANT DETAIL

NOT TO SCALE

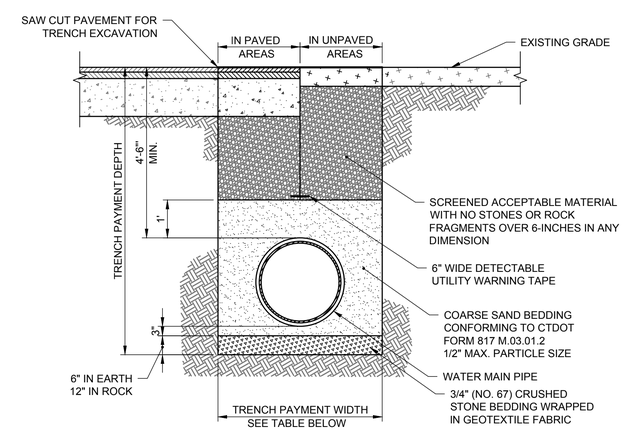

TRENCH WIDTH LIMITS	
NOMINAL PIPE SIZE (INCHES)	TRENCH WIDTH
4	3'-0"
6	3'-0"
8	3'-0"
10	3'-4"
12	3'-6"
16	3'-10"
20	4'-3"
24	4'-6"
30	5'-3"

NOTES:
1. EXCAVATION OUTSIDE OF TRENCH PAYMENT LIMITS WILL NOT BE MEASURED OR INCLUDED FOR PAYMENT.

WATER MAIN TRENCH DETAIL

NOT TO SCALE

MARK	DATE	MADE BY	CHECKED	DESCRIPTION

REVISIONS

100% SUBMITTAL

AECOM
AECOM, INC.
50 MYRICK STREET DRIVE
ROCKY HILL, CT 06067
PHONE (860) 263-3000

EPA CONTRACT NO. EP-S1-06-01
DURHAM MEADOWS WATERLINE RD
DURHAM AND MIDDLETOWN, CONNECTICUT
TASK ORDER NO. 0060-RD-RD-01D5

WATER MAIN DETAILS

CIVIL

PROJECT NO:	60275749
CAD DWG FILE:	CZDUR502
DESIGNED BY:	MCC
DRAWN BY:	MCC
DEPT CHECK:	GRS
PROJ CHECK:	MWM
DATE:	APRIL 2018
SCALE:	AS NOTED

C-502

ANSI D – 15-Mar-18

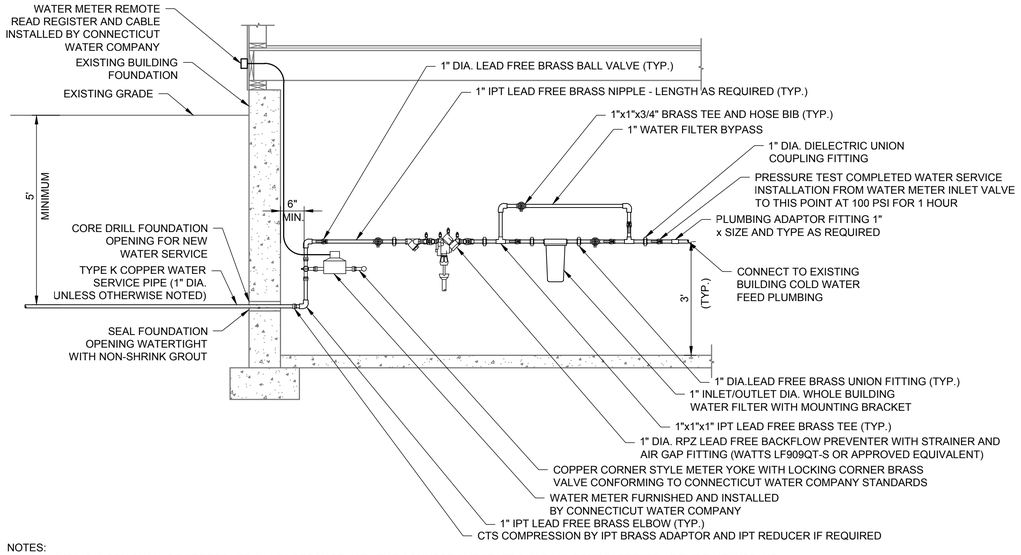

NOTES:
1. PLUMBING WORK SHALL BE PERFORMED IN ACCORDANCE WITH THE CONNECTICUT STATE BUILDING CODE IN EFFECT AT THE TIME WORK IS PERFORMED BY A PLUMBER LICENSED IN THE STATE OF CONNECTICUT.
2. CONTRACTOR SHALL OBTAIN ALL PERMITS AND PAY ALL FEES ASSOCIATED WITH THIS WORK PRIOR TO PERFORMING WORK. A COPY OF THE WORK PERMIT SHALL BE AT THE PROJECT LOCATION AND AVAILABLE FOR INSPECTION AT ALL TIMES WORK IS BEING PERFORMED.
3. ALL PIPING SHALL BE SUPPORTED FROM BUILDING STRUCTURE. PIPE TO PIPE SUPPORTS ARE NOT ALLOWED.
4. PITCH ALL WATER LINES TO DRAIN.
5. BACKFLOW PREVENTER SHALL BE TESTED BY A CERTIFIED TESTER AND CERTIFIED TO BE IN GOOD WORKING ORDER AND SUITABLE FOR USE. FURNISH TESTING RESULTS TO OWNER.
6. NO BUILDING STRUCTURAL MEMBERS ARE TO BE CUT.
7. CONTRACTOR SHALL COORDINATE WITH THE CONNECTICUT WATER COMPANY FOR WATER SERVICE INSPECTION AND WATER METER INSTALLATION.
8. CONTRACTOR SHALL REMOVE ALL CONSTRUCTION DEBRIS AND RESTORE WORK AREA TO EXISTING CONDITIONS.
9. CONTRACTOR SHALL PROVIDE TEMPORARY WATER METER SPREADERS AS NEEDED.

1 | TYPICAL BUILDING WATER SERVICE SCHEMATIC DETAIL
NOT TO SCALE

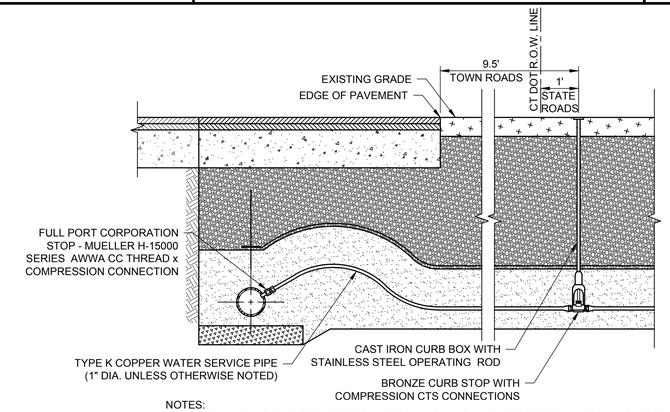

NOTES:
1. APPROVED CURB STOP MANUFACTURERS: MUELLER MARK II ORISEAL H-15209, MUELLER 300 BALL VALVE B-25209, FORD B44-444-Q, A.Y. MCDONALD 6100-Q.
2. APPROVED CURB BOX MANUFACTURERS: MUELLER H-10314, QWP "LAROACHE", BIBBY #R1500. PROVIDE STAINLESS STEEL OPERATING ROD.

2 | NEW WATER SERVICE AND CURB STOP DETAIL
NOT TO SCALE

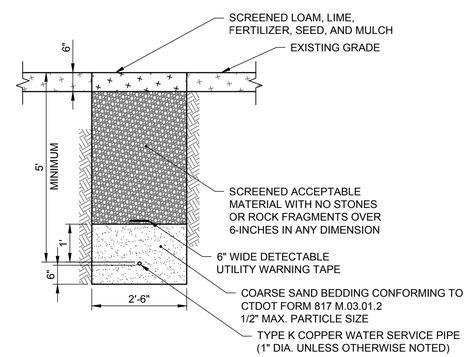

NOTE:
1. COORDINATE WITH CONNECTICUT WATER COMPANY FOR INSPECTION AND TESTING OF WATER SERVICE PIPE PRIOR TO BACKFILLING WATER SERVICE TRENCH.

3 | WATER SERVICE TRENCH DETAIL
NOT TO SCALE

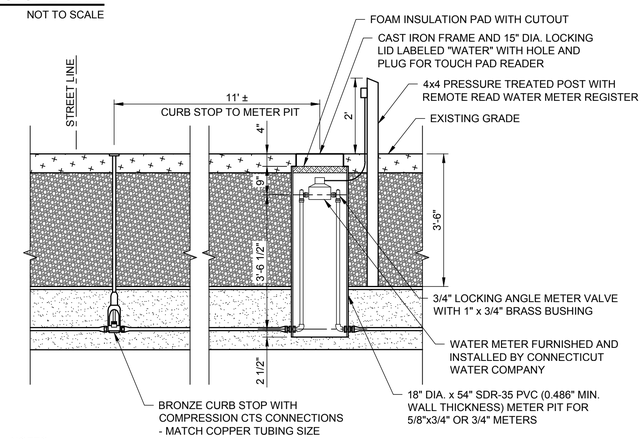

NOTES:
1. METER PITS TO BE INSTALLED ON WATER SERVICE LINES LONGER THAN 150' OR IN SPECIAL CIRCUMSTANCES.
2. WATER METER PIT TO BE OWNED AND MAINTAINED BY PROPERTY OWNER.
3. FURNISH AND INSTALL REDUCING FITTINGS IF REQUIRED TO MATE WITH METER PIT PIPING SIZES.
4. FURNISH AND INSTALL GATE VALVE OR BALL VALVE IN BUILDING FOR EMERGENCY WATER SERVICE SHUT OFF USE.

4 | WATER METER PIT DETAIL
NOT TO SCALE

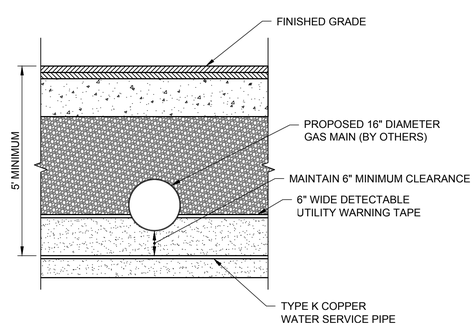

5 | PROPOSED WATER SERVICE GAS MAIN CROSSING DETAIL
NOT TO SCALE

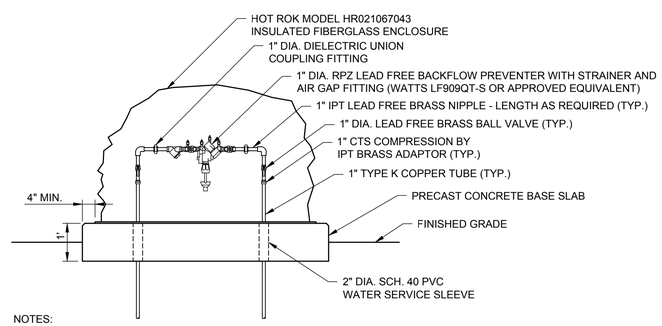

NOTES:
1. PLUMBING WORK SHALL BE PERFORMED IN ACCORDANCE WITH THE CONNECTICUT STATE BUILDING CODE IN EFFECT AT THE TIME WORK IS PERFORMED BY A PLUMBER LICENSED IN THE STATE OF CONNECTICUT.
2. BACKFLOW PREVENTER TO BE REMOVED SEASONALLY DURING FREEZING TEMPERATURES AND WATER SERVICE LINES PURGED.

6 | TYPICAL EXTERIOR BACKFLOW PREVENTER DETAIL
NOT TO SCALE

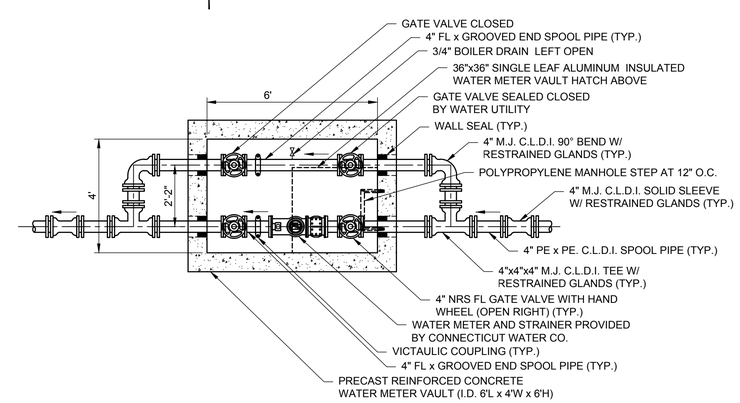

7 | 4" DIA. WATER SERVICE METER VAULT DETAIL
NOT TO SCALE

MARK	DATE	MADE BY	CHECKED	DESCRIPTION
				100% SUBMITTAL

REVISIONS

AECOM, INC.
250 APPROACH DRIVE
ROCKY HILL, CT 06067
PHONE (860) 263-3000

EPA CONTRACT NO. EP-S1-06-01
DURHAM MEADOWS WATERLINE RD
DURHAM AND MIDDLETOWN, CONNECTICUT
TASK ORDER NO. 0060-RD-RD-01D5

WATER SERVICE DETAILS
CIVIL

PROJECT NO:	60275749
CAD DWG FILE:	CZDUR503
DESIGNED BY:	MCC
DRAWN BY:	MCC
DEPT CHECK:	GRS
PROJ CHECK:	MWM
DATE:	APRIL 2018
SCALE:	AS NOTED

C-503

ANSI D – 4-Apr-18

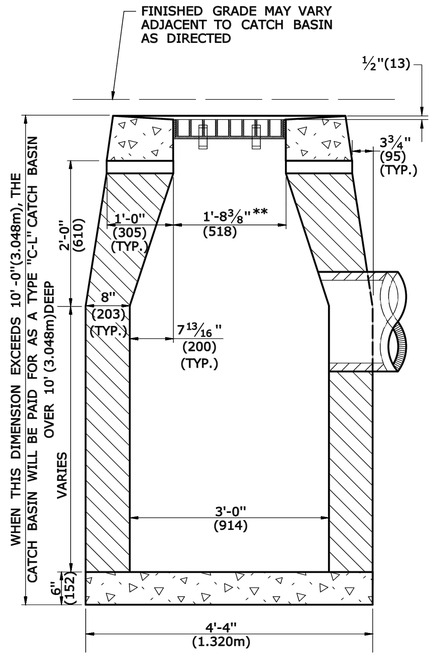

SECTION (B)

TYPE "C-L" CATCH BASIN

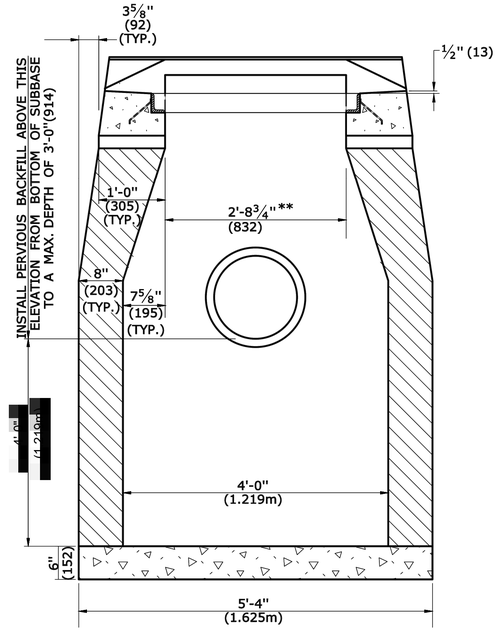

SECTION (A)

TYPE "C" & "C-L" CATCH BASIN (TYPE "C" TOP SHOWN)

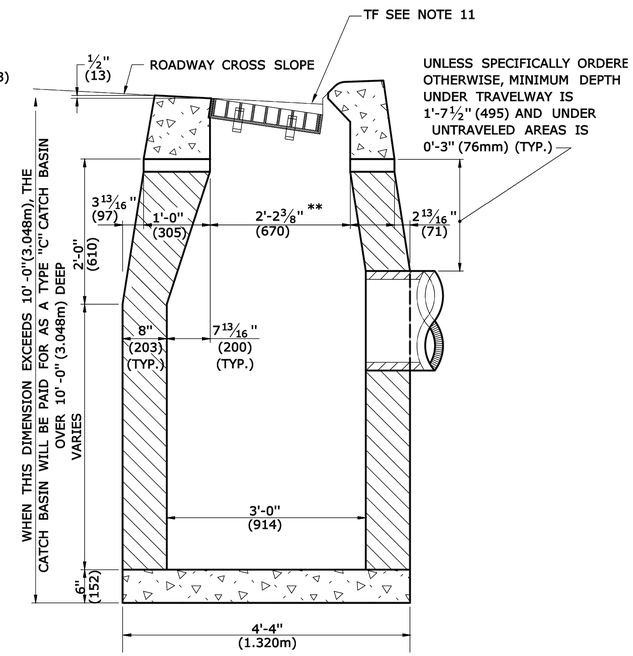

SECTION (B)

TYPE "C" CATCH BASIN

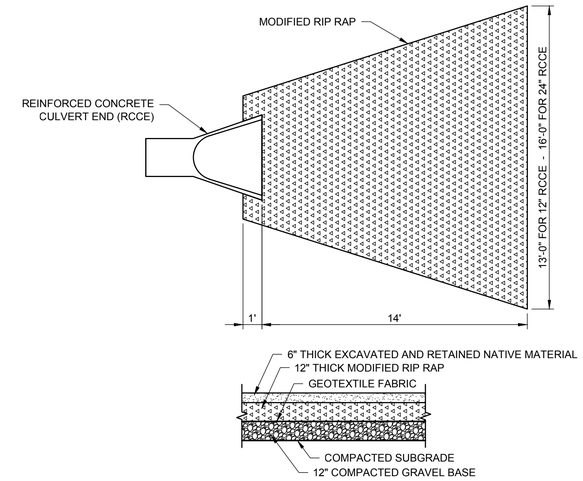

MODIFIED RIP RAP APRON DETAIL

NOT TO SCALE

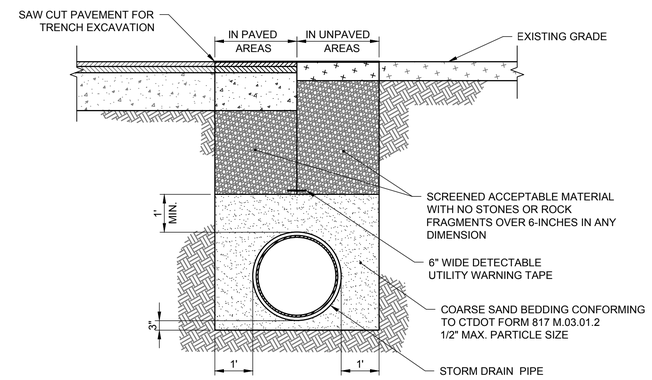

STORM DRAIN TRENCH DETAIL

NOT TO SCALE

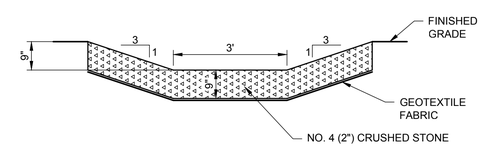

DRAINAGE SWALE DETAIL

NOT TO SCALE

NOTES:
1. REINFORCED CONCRETE CULVERT ENDS SHALL CONFORM TO CT DOT STANDARD DRAWING HW-652_01.
2. CATCH BASIN TOPS SHALL CONFORM TO CT DOT STANDARD DRAWINGS HW-507_07 AND HW-507_08.
3. CATCH BASIN FRAMES AND GRATES SHALL BE "TYPE A", GALVANIZED STEEL.

MARK	DATE	MADE BY	CHECKED	DESCRIPTION
				100% SUBMITTAL

REVISIONS

AECOM, INC.
500 NEWPORT CENTRE DRIVE
ROCKY HILL, CT 06067
PHONE (860) 263-3000

AECOM

EPA CONTRACT NO. EP-S1-06-01
DURHAM MEADOWS WATERLINE RD
DURHAM AND MIDDLETOWN, CONNECTICUT
TASK ORDER NO. 0060-RD-RD-0105

STORM DRAINAGE DETAILS

CIVIL

PROJECT NO:	60275749
CAD DWG FILE:	CZDUR504
DESIGNED BY:	MCC
DRAWN BY:	MCC
DEPT CHECK:	GRS
PROJ CHECK:	MWM
DATE:	APRIL 2018
SCALE:	AS NOTED

C-504

ANSI D – 2-Feb-18

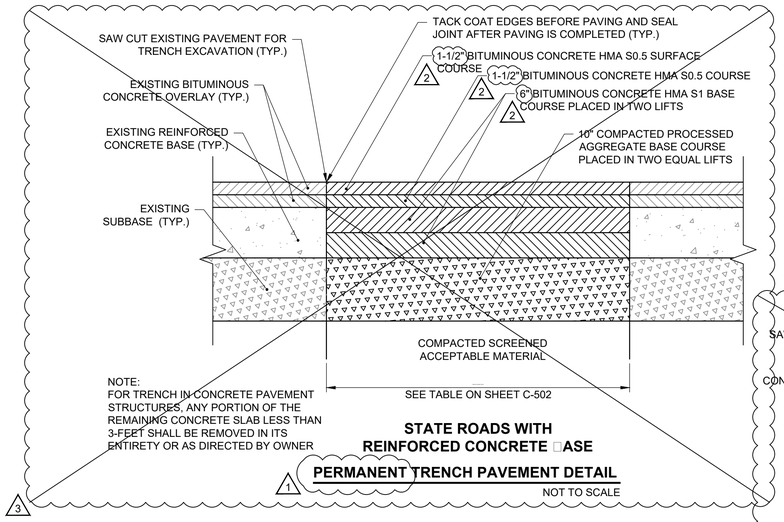

STATE ROADS WITH REINFORCED CONCRETE BASE

PERMANENT TRENCH PAVEMENT DETAIL

NOT TO SCALE

3 NOTE: REFER TO SHEET C-505A FOR ADDITIONAL DETAILS.

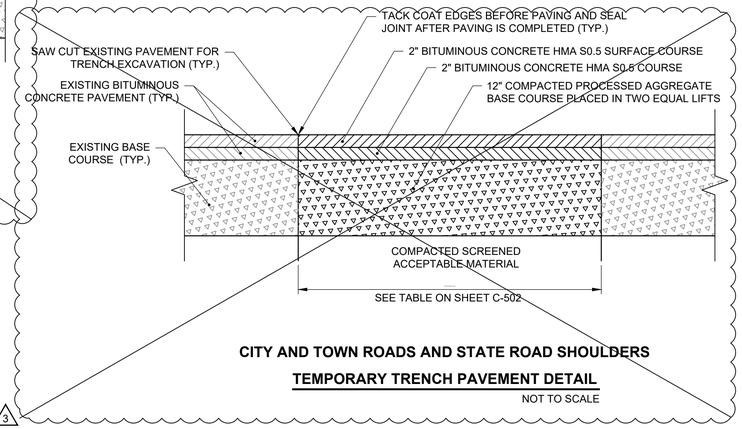

CITY AND TOWN ROADS AND STATE ROAD SHOULDERS

TEMPORARY TRENCH PAVEMENT DETAIL

NOT TO SCALE

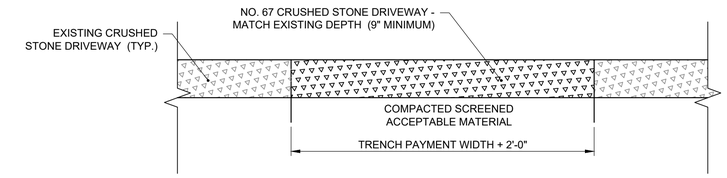

CRUSHED STONE DRIVEWAY RESTORATION DETAIL

NOT TO SCALE

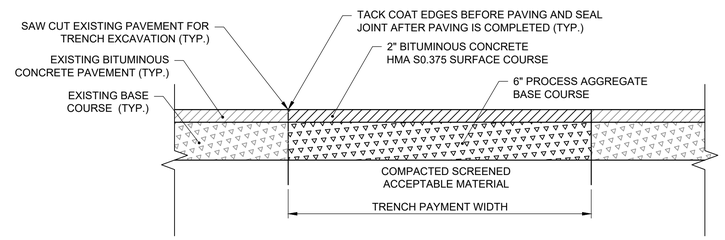

BITUMINOUS CONCRETE DRIVEWAY RESTORATION DETAIL

NOT TO SCALE

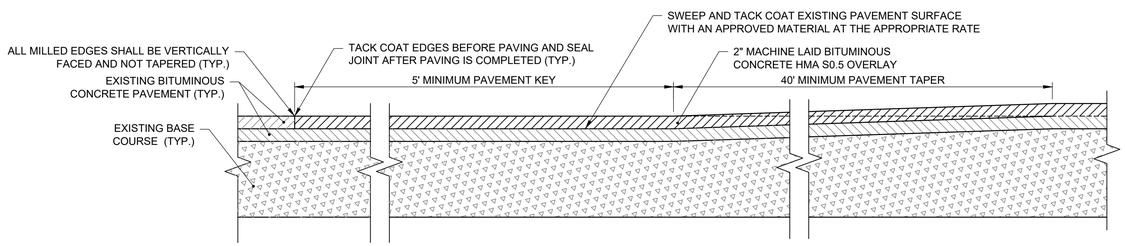

PAVEMENT OVERLAY TIE IN DETAIL

NOT TO SCALE

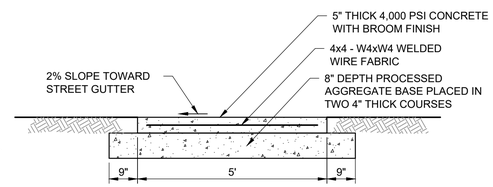

NOTES:
1. PROVIDE 1/4" TOOLED JOINTS AT 5' INTERVALS.
2. PROVIDE 1/2" EXPANSION JOINTS AT 15' INTERVALS.

CONCRETE SIDEWALK DETAIL

NOT TO SCALE

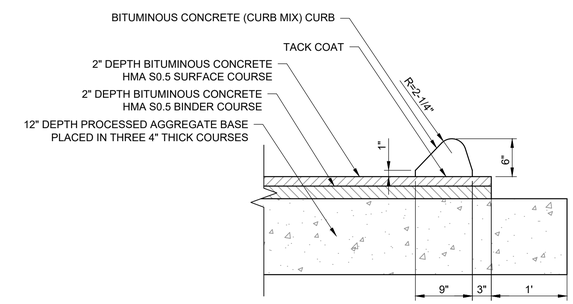

BITUMINOUS CONCRETE CURB DETAIL

NOT TO SCALE

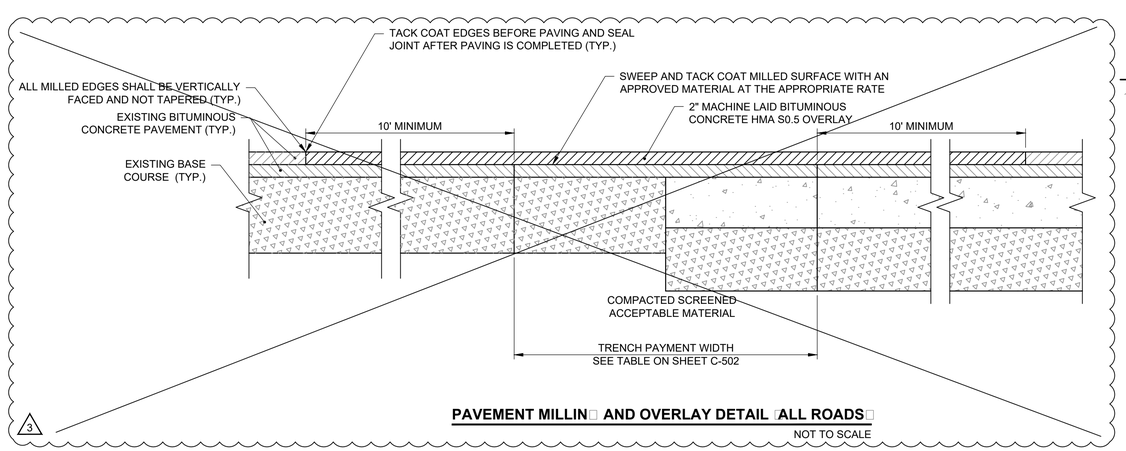

PAVEMENT MILLING AND OVERLAY DETAIL ALL ROADS

NOT TO SCALE

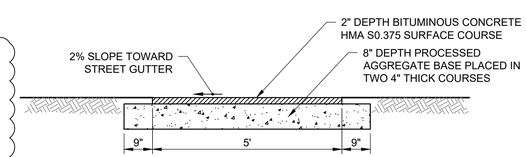

BITUMINOUS CONCRETE SIDEWALK DETAIL

NOT TO SCALE

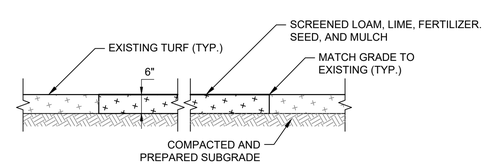

TURF RESTORATION DETAIL

NOT TO SCALE

NOTES:
1. ALL TRENCH CUTS IN ROADWAYS, DRIVEWAYS, AND SIDEWALKS SHALL BE PERFORMED BY SAW CUTTING.
2. ALL TRENCH OPENINGS WILL HAVE TEMPORARY PAVEMENT PLACED DAILY WITHOUT EXCEPTION. THE USE OF STEEL PLATING IN AN EMERGENCY SITUATION MAY BE PERMITTED WITH WRITTEN APPROVAL OF OWNER. OVERNIGHT PLATING MUST BE PINNED AND PLATE EDGES RAMPED WITH TEMPORARY BITUMINOUS CONCRETE. APPLICABLE POLICE AND FIRE DEPARTMENTS SHALL BE NOTIFIED OF PLATE INSTALLATION. THE USE OF STEEL PLATES IN THE STATE HIGHWAY RIGHT OF WAY SHALL CONFORM TO ALL CT DOT GUIDELINES AND REQUIREMENTS.
3. THE CONTRACTOR WILL BE RESPONSIBLE FOR PROPER PLACEMENT AND MAINTENANCE OF THE TEMPORARY PAVEMENT AND SHALL KEEP THE PAVEMENT IN PROPER CONDITION AS SOLELY DETERMINED BY OWNER.
4. NO ROADWAY SHOULDER EXCAVATIONS WILL BE LEFT OPEN OVERNIGHT.
5. ALL TRAFFIC PAVEMENT MARKINGS DISTURBED BY EXCAVATION WILL BE TEMPORARILY RESTORED DAILY WITHOUT EXCEPTION.
6. ALL TRAFFIC SIGNALS SHALL REMAIN OPERATIONAL DURING CONSTRUCTION.
7. ALL TRAFFIC LOOP DETECTORS DAMAGED BY CONSTRUCTION MUST BE REPAIRED WITHIN 24 HOURS OF BEING DAMAGED WITHOUT EXCEPTION. REFER TO CTDOT STANDARD SHEET TR-1111_01, "LOOP VEHICLE DETECTOR AND SAWCUT" FOR INSTALLATION REQUIREMENTS. SEE DRAWING C-508.
8. PERMANENT PAVEMENT RESTORATION WILL NOT BE PERFORMED WITHIN 90 DAYS OF TEMPORARY PAVEMENT PLACEMENT.
9. MAPLE AVENUE, TALCOTT LANE, PICKETT LANE, AND MAIDEN LANE SHALL BE RESTORED BY PROVISION OF A PAVEMENT OVERLAY WITHOUT MILLING THE EXISTING PAVEMENT. CONTRACTOR SHALL INSTALL NEW DRIVEWAY APRONS WITH 1-1/2" LIP AND SHALL ADJUST ALL EXISTING DRAINAGE AND UTILITY STRUCTURES TO THE NEW ROAD ELEVATION AS REQUIRED.
10. ALL TRAFFIC PAVEMENT MARKINGS DISTURBED BY THE CONTRACTOR'S OPERATIONS SHALL BE PERMANENTLY RESTORED AFTER COMPLETION OF PAVEMENT OVERLAY INSTALLATION GENERALLY IN ACCORDANCE WITH SECTION 12.10 OF THE STATE SPECIFICATIONS.
11. TRAFFIC CONTROLS FOR UTILITY WORK IN ALL AREAS SHALL CONFORM TO THE CT DOT GUIDELINES ENTITLED "TRAFFIC CONTROL DURING MAINTENANCE OPERATIONS".

100% SUBMITTAL

MARK	DATE	MADE BY	CHECKED	DESCRIPTION
REV 3	AUG 2019	RB	RB	JC0003
REV 2	APR 2019	RB	RB	BID AMENDMENT
REV 1	JUL 2018	RB	RB	BID AMENDMENT

REVISIONS

AECOM, INC.
250 APPLE TREE DRIVE
ROCKY HILL, CT 06067
PHONE (860) 263-3800

EPA CONTRACT NO. EP-S1-06-01
DURHAM MEADOWS WATERLINE RD
DURHAM AND MIDDLETOWN, CONNECTICUT
TASK ORDER NO. 0060-RD-RD-0105

SURFACE RESTORATION DETAILS

CIVIL

PROJECT NO:	60275749
CAD DWG FILE:	CZDUR505
DESIGNED BY:	MCC
DRAWN BY:	MCC
DEPT CHECK:	GRS
PROJ CHECK:	MWM
DATE:	APRIL 2018
SCALE:	AS NOTED

C-505

ANSI D – 28-Aug-19

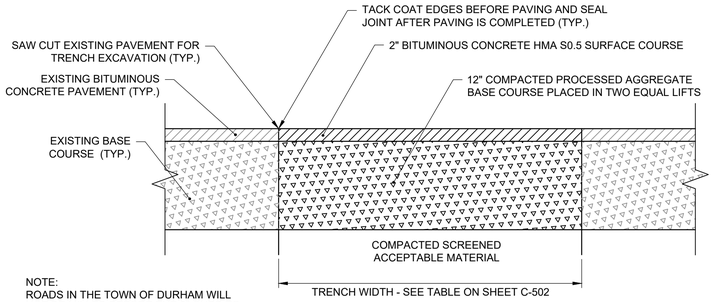

NOTE:
ROADS IN THE TOWN OF DURHAM WILL NOT BE MILLED BEFORE THE 2" CURB TO CURB PAVEMENT OVERLAY IS PLACED. REFER TO THE NOTES ON DRAWING C-505.

TOWN OF DURHAM ROADS

TRENCH PAVEMENT DETAIL

NOT TO SCALE

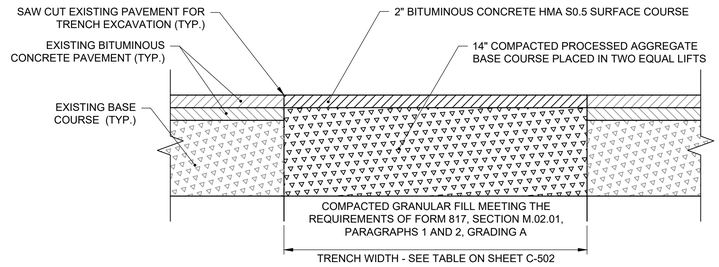

CITY OF MIDDLETOWN ROADS

TEMPORARY TRENCH PAVEMENT DETAIL

NOT TO SCALE

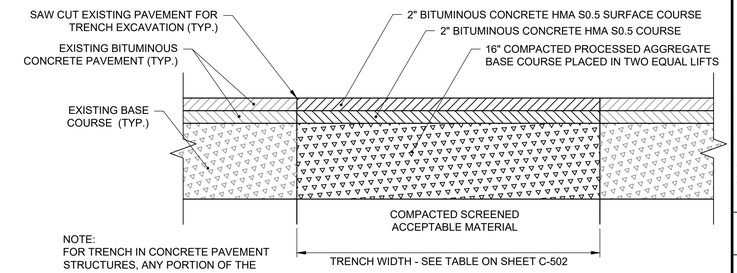

NOTE:
FOR TRENCH IN CONCRETE PAVEMENT STRUCTURES, ANY PORTION OF THE REMAINING CONCRETE SLAB LESS THAN 3-FEET SHALL BE REMOVED IN ITS ENTIRETY OR AS DIRECTED BY OWNER

STATE ROADS

TEMPORARY TRENCH PAVEMENT DETAIL

NOT TO SCALE

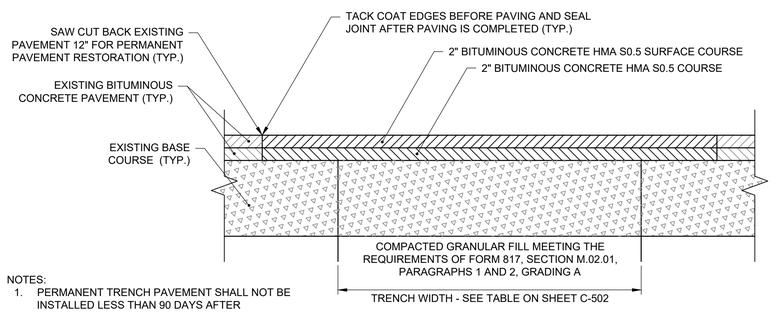

NOTES:
1. PERMANENT TRENCH PAVEMENT SHALL NOT BE INSTALLED LESS THAN 90 DAYS AFTER TEMPORARY TRENCH PAVEMENT WAS INSTALLED.

CITY OF MIDDLETOWN ROADS

PERMANENT TRENCH PAVEMENT DETAIL

NOT TO SCALE

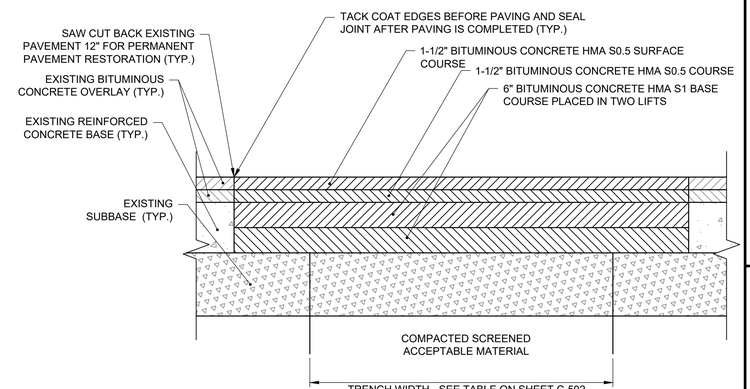

STATE ROADS

PERMANENT TRENCH PAVEMENT DETAIL

NOT TO SCALE

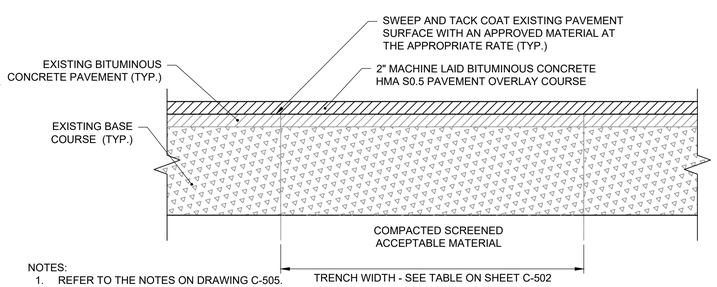

NOTES:
1. REFER TO THE NOTES ON DRAWING C-505.
2. EXTEND PAVEMENT OVERLAY AT LEAST 10' FROM EDGE OF PERMANENT TRENCH PAVEMENT REPAIR.
3. TACK COAT OVERLAY EDGES BEFORE PAVING AND SEAL JOINT AFTER PAVING IS COMPLETED.

TOWN OF DURHAM ROADS

PAVEMENT OVERLAY DETAIL

NOT TO SCALE

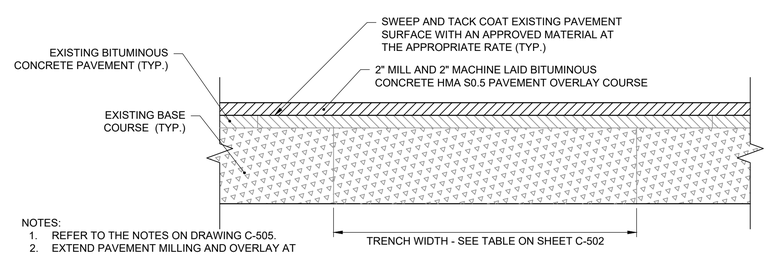

NOTES:
1. REFER TO THE NOTES ON DRAWING C-505.
2. EXTEND PAVEMENT MILLING AND OVERLAY AT LEAST 10' FROM EDGE OF PERMANENT TRENCH PAVEMENT REPAIR.
3. ALL MILLED EDGES SHALL BE VERTICALLY FACED AND NOT TAPERED.
4. TACK COAT OVERLAY EDGES BEFORE PAVING AND SEAL JOINT AFTER PAVING IS COMPLETED.

CITY OF MIDDLETOWN ROADS

PERMANENT MILL AND OVERLAY PAVEMENT DETAIL

NOT TO SCALE

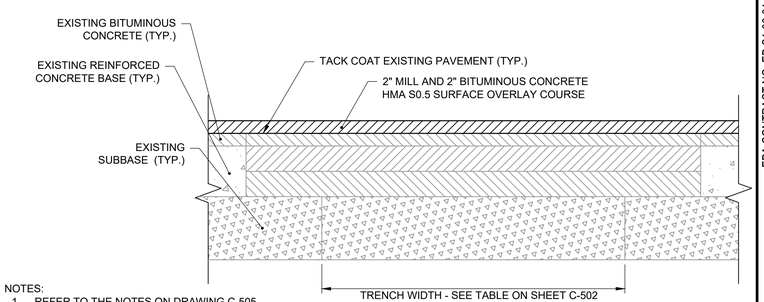

NOTES:
1. REFER TO THE NOTES ON DRAWING C-505.
2. EXTEND PAVEMENT MILLING AND OVERLAY AT LEAST 10' FROM EDGE OF PERMANENT TRENCH PAVEMENT REPAIR.
3. ALL MILLED EDGES SHALL BE VERTICALLY FACED AND NOT TAPERED.
4. TACK COAT OVERLAY EDGES BEFORE PAVING AND SEAL JOINT AFTER PAVING IS COMPLETED.

STATE ROADS

PERMANENT PAVEMENT MILL AND OVERLAY DETAIL

NOT TO SCALE

1 NOTE: REFER TO SHEET C-505 FOR ADDITIONAL DETAILS.

MARK	DATE	MADE BY	CHECKED	DESCRIPTION
REV 1	AUG 2019	RB	RB	JC0001, JC0003

REVISIONS

100% SUBMITTAL

AECOM, INC.
500 ENTERPRISE DRIVE
ROCKY HILL, CT 06067
PHONE (860) 263-5800

AECOM

EPA CONTRACT NO. EP-S1-06-01
DURHAM MEADOWS WATERLINE RD
DURHAM AND MIDDLETOWN, CONNECTICUT
TASK ORDER NO. 0060-RD-RD-01D5

SURFACE RESTORATION DETAILS

CIVIL

PROJECT NO:	60275749
CAD DWG FILE:	CZDUR505
DESIGNED BY:	MCC
DRAWN BY:	MCC
DEPT CHECK:	GRS
PROJ CHECK:	MWM
DATE:	APRIL 2018
SCALE:	AS NOTED

C-505A

ANSI D – 28-Aug-19

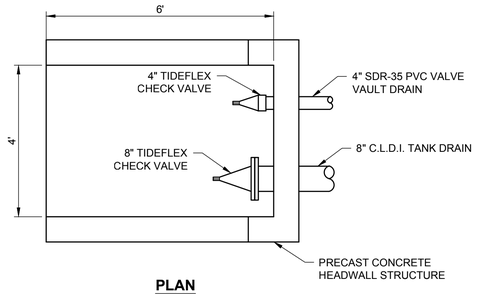

PLAN

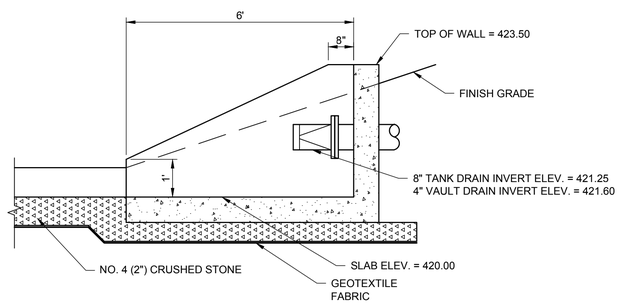

SECTION

PRECAST CONCRETE HEADWALL STRUCTURE DETAIL

NOT TO SCALE

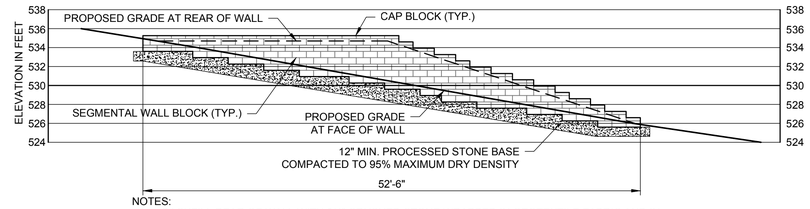

NOTES:
1. BACKFILL REAR OF WALL WITH 3/4" CRUSHED STONE WRAPPED IN GEOTEXTILE FABRIC AND IN ACCORDANCE WITH WALL BLOCK MANUFACTURER'S WRITTEN INSTALLATION INSTRUCTIONS.
2. PROVIDE 42" HIGH 1-1/2" DIA. SCH40 STEEL RAILING AT TOP OF WALL WITH TWO COATS POLYURETHANE (TNEMEC SERIES 1074 ENDURA-SHIELD OR EQUAL) COATING. COLOR AS SELECTED BY OWNER.

SEGMENTAL BLOCK RETAINING WALL DETAIL

NOT TO SCALE

NOTES:
1. REFER TO CONNECTICUT DOT STANDARD SHEETS HW-910_12 a, b, AND c, FOR MERRITT PARKWAY GUIDERAIL DETAILS

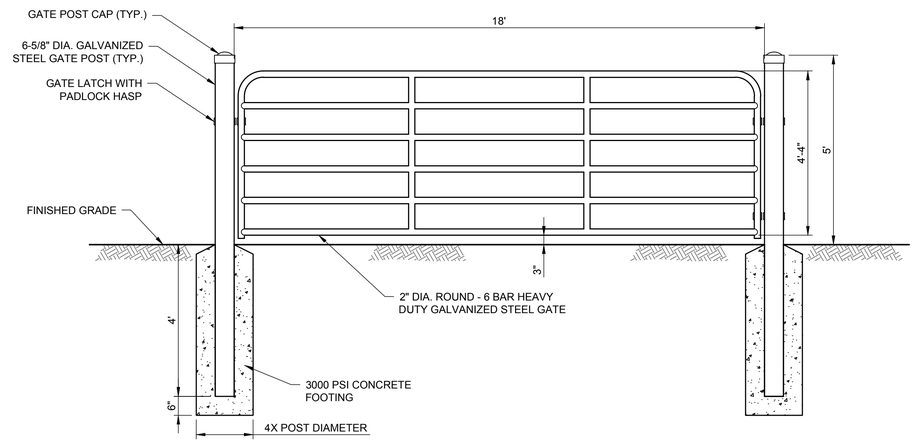

DRIVEWAY GATE DETAIL

NOT TO SCALE

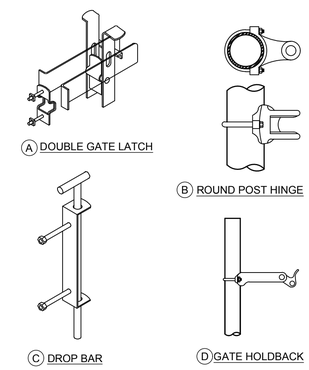

CHAIN LINK FENCE HARDWARE

NOT TO SCALE

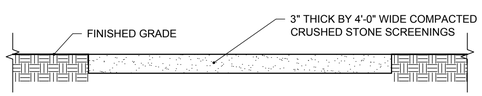

STORAGE TANK WALKING TRAIL DETAIL

NOT TO SCALE

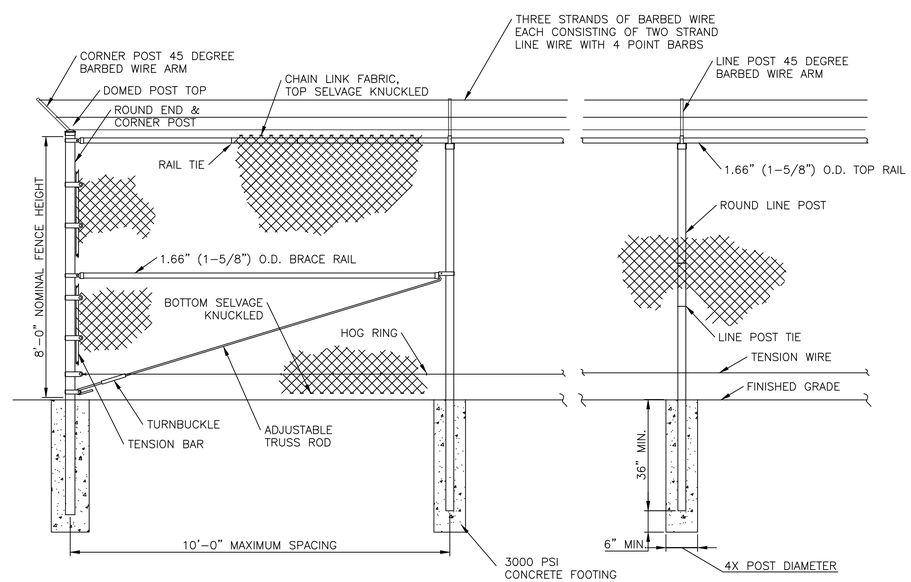

CHAIN LINK FENCE DETAIL

NOT TO SCALE

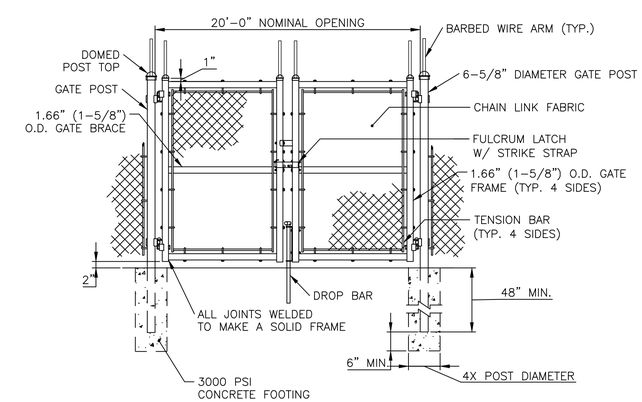

CHAIN LINK FENCE GATE DETAIL

NOT TO SCALE

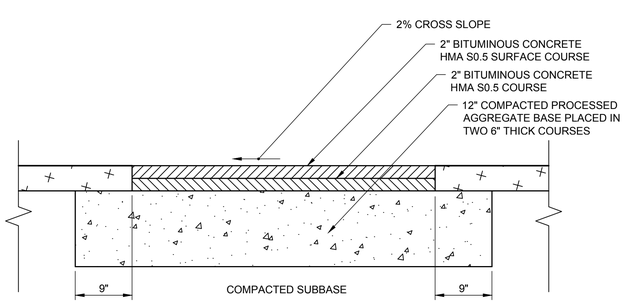

STORAGE TANK BITUMINOUS CONCRETE DRIVEWAY DETAIL

NOT TO SCALE

MARK	DATE	MADE BY	CHECKED	DESCRIPTION
				100% SUBMITTAL

REVISIONS

AECOM, INC.
250 APPROACH DRIVE
ROCKY HILL, CT 06067
PHONE (860) 263-5000

EPA CONTRACT NO. EP-S1-06-01
DURHAM MEADOWS WATERLINE RD
DURHAM AND MIDDLETOWN, CONNECTICUT
TASK ORDER NO. 0060-RD-RD-01D5

WATER STORAGE TANK SITE DETAILS

CIVIL

PROJECT NO:	60275749
CAD DWG FILE:	CZDUR506
DESIGNED BY:	MCC
DRAWN BY:	MCC
DEPT CHECK:	GRS
PROJ CHECK:	MWM
DATE:	APRIL 2018
SCALE:	AS NOTED

C-506

ANSI D – 26-Jan-18

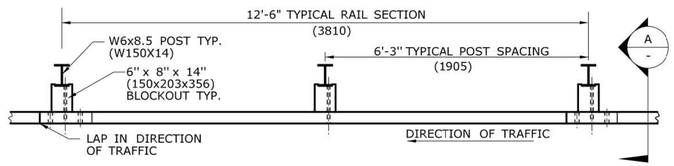

PLAN

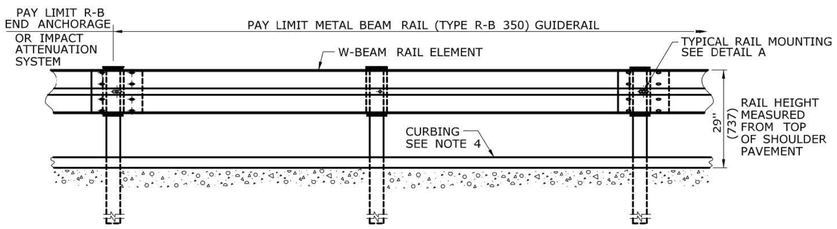

ELEVATION

METAL BEAM RAIL (TYPE R-B 350)

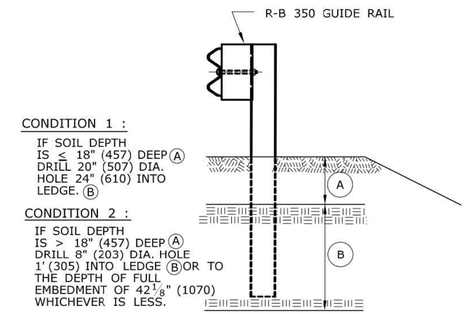

ELEVATION
(SEE NOTE 8)

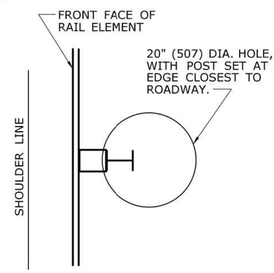

PLAN
CONDITION 1
(SEE NOTE 8)

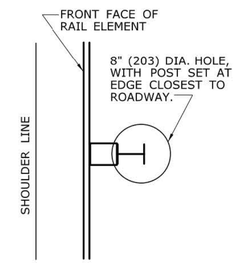

PLAN
CONDITION 2
(SEE NOTE 8)

DRILLING IN ROCK FOR GUIDERAIL POSTS

GENERAL NOTES:

1. SEE SHEET HW-910_01 FOR HARDWARE AND DELINEATOR DETAILS.
2. MAXIMUM DESIGN DEFLECTION FOR R-B 350 GUIDERAIL AT THE STANDARD POST SPACING OF 6'-3"(1905) IS 4'-3"(1295). DEFLECTION REQUIREMENT IS MEASURED FROM THE BACK OF POST TO THE FACE OF OBJECT.
3. FOR CURVES WITH RADII OF 150'(45.7m) OR LESS, ALL RAIL ELEMENTS SHALL BE SHOP FABRICATED TO THE PROPER RADIUS AND GALVANIZED AFTER FABRICATION. RADIUS RAIL WHEN REQUIRED AND NOTED ON THE PLANS, IS INCLUDED IN THE PAY ITEM FOR GUIDERAIL.
4. RAIL HEIGHT WITH CURBING SHALL BE MEASURED FROM THE TOP OF PAVEMENT. ON HIGH SPEED ROADWAYS (≥45mph 72.4kph), 4"(102) CURBING MAY BE USED IN CONJUNCTION WITH GUIDERAIL AND THE RAIL ELEMENT SHALL BE PLACED FLUSH WITH THE FACE OF CURB. ON LOW SPEED ROADWAYS (<45mph 72.4kph), 6"(152) CURBING MAY BE USED IN CONJUNCTION WITH GUIDERAIL AND THE RAIL ELEMENT SHALL BE PLACED A MAXIMUM OF 9"(229) BEHIND THE FACE OF CURB.
5. THREE BLOCKOUTS MAY BE USED FOR ONE POST ONLY. TWO BLOCKOUTS MAY BE USED FOR A SERIES OF POSTS. THE COST OF ADDITIONAL BLOCKOUTS AND LONGER BOLTS SHALL BE INCLUDED IN THE BID PRICE PER FOOT OF GUIDERAIL. EXTRA BLOCKOUTS AT TRANSITION TO BRIDGE PARAPETS SHOULD BE AVOIDED.
6. W-BEAM GUIDERAIL MAY BE PLACED 1'(305) OR MORE FROM THE EDGE OF PAVEMENT ONLY ON SLOPES 10:1 OR FLATTER AND WITHOUT CURBING. IF THE RAIL IS INSTALLED WITHIN 2'(610) OF THE EDGE OF PAVEMENT, THE RAIL HEIGHT IS MEASURED FROM THE SHOULDER SLOPE EXTENDED TO THE RAIL. IF THE RAIL IS INSTALLED BEYOND 2'(610) FROM THE EDGE OF PAVEMENT, THE RAIL HEIGHT IS MEASURED FROM THE GROUND DIRECTLY BELOW THE RAIL.
7. ALL R-B 350 GUIDERAIL TYPES INSTALLED ON EXPRESSWAYS AND RAMPS SHALL USE CLASS B, TYPE-II (10 GAUGE) W-BEAM RAIL ELEMENTS.
8. 20" (507) DIA. EXCAVATED HOLE SHALL BE BACKFILLED WITH SUITABLE MATERIAL, OR GRANULAR FILL COMPACTED IN 6" (150) LIFTS BEFORE DRIVING POST OR POSTS MAY BE SET IN EXCAVATED HOLE AND BACKFILLED WITH CONTROLLED LOW STRENGTH MATERIAL (CLSM). 8" (203) DIA. HOLE SHALL BE BACKFILLED WITH SUITABLE MATERIAL.
9. AS DIRECTED BY THE ENGINEER AND WHERE PAVEMENT FOR RAILING IS NOT BEING INSTALLED, A MIN. 6" DEPTH OF PROCESSED AGGREGATE SHALL BE INSTALLED FROM THE PAVEMENT EDGE OR BACK OF CURB TO A MINIMUM OF 2'(610) BEHIND THE GUIDERAIL POST AND COMPACTED IN 6" (150) LIFTS.
10. MINIMUM RAIL HEIGHT FOR NEW CONSTRUCTION SHALL BE 29" (737) ± 1" (25).

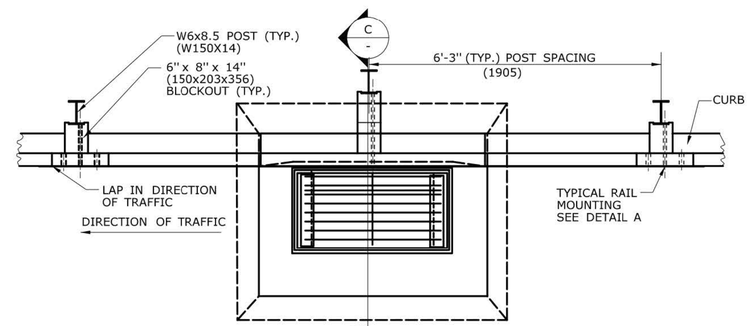

PLAN

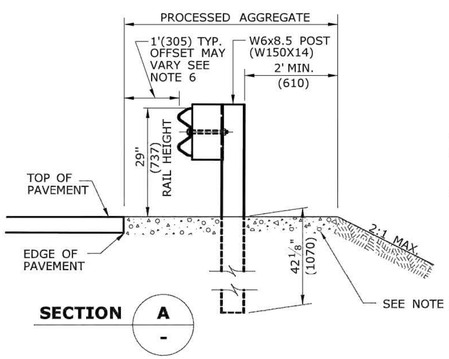

SECTION A

NO CURB APPLICATION

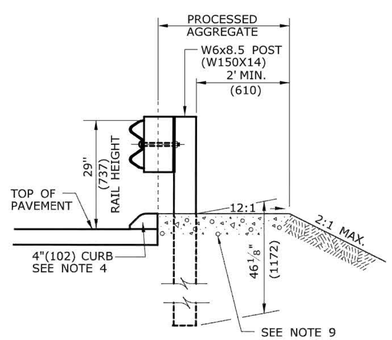

SECTION A

CURB APPLICATION

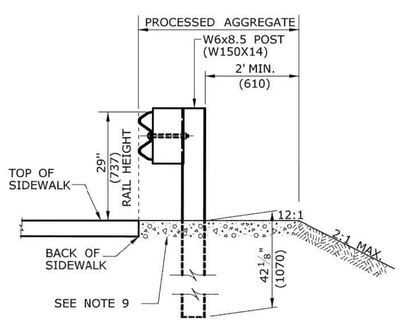

SECTION A

SIDEWALK APPLICATION

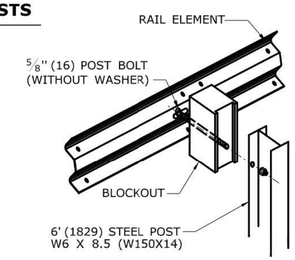

DETAIL A
RAIL MOUNTING

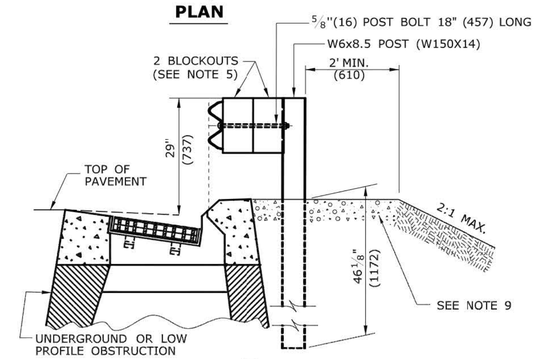

SECTION C

MULTIPLE BLOCKOUT APPLICATION (MAY BE USED TO AVOID UNDERGROUND OR LOW PROFILE OBSTRUCTION)

ALL METRIC DIMENSIONS ARE IN MILLIMETERS (mm) UNLESS OTHERWISE NOTED.

REV.	DATE	REVISION DESCRIPTION
1	6/11	REVISED NOTE 9 FOR USE OF PROCESSED AGGREGATE - AND REMOVED NOTE 6 FOR WEATHERING STEEL -
-	-	-
-	-	-
-	-	-
-	-	-

THE INFORMATION, INCLUDING ESTIMATED QUANTITIES OF WORK SHOWN ON THESE SHEETS IS BASED ON LIMITED INVESTIGATIONS BY THE STATE AND IS IN NO WAY WARRANTED TO INDICATE THE CONDITIONS OF ACTUAL QUANTITIES OF WORK WHICH WILL BE REQUIRED.

Plotted Date: 5/10/2011

NOT TO SCALE

STATE OF CONNECTICUT
DEPARTMENT OF TRANSPORTATION

Filename: CTDOT_HIGHWAY_STD_JUNE2011.dgn Model: 37- HW-910_02

SUBMITTED BY: NAME/DATE/TIME: Digitally signed by Leo Fontaine DN: c=US, st=Connecticut, l=Wethersfield, ou=Department of Transportation, email=Leo.Fontaine@ct.gov, o=State of Connecticut, cn=Leo Fontaine Date: 2011.05.18 11:04:43 -04'00'

APPROVED BY: NAME/DATE/TIME: James H. Norman 2011.06.09 15:12:46 -04'00'

CTDOT STANDARD SHEET

OFFICE OF ENGINEERING

STANDARD SHEET TITLE: METAL BEAM RAIL (TYPE R-B 350) GUIDERAIL

STANDARD SHEET NO.: HW-910_02

REVISIONS					
MARK	DATE	MADE BY	CHECKED	DESCRIPTION	

100% SUBMITTAL

AECOM, INC.
500 NEWPORT CENTRE DRIVE
ROCKY HILL, CT 06067
PHONE: (860) 263-3800

EPA CONTRACT NO. EP-S1-06-01
DURHAM MEADOWS WATERLINE RD
DURHAM AND MIDDLETOWN, CONNECTICUT
TASK ORDER NO. 0060-RD-01D5

METAL BEAM RAIL
(TYPE R-B 350) GUIDERAIL DETAILS
CIVIL

PROJECT NO:	60275749
CAD DWG FILE:	CZDUR507
DESIGNED BY:	MCC
DRAWN BY:	MCC
DEPT CHECK:	GRS
PROJ CHECK:	MWM
DATE:	APRIL 2018
SCALE:	AS NOTED

C-507

ANSI D — 26-Jan-18

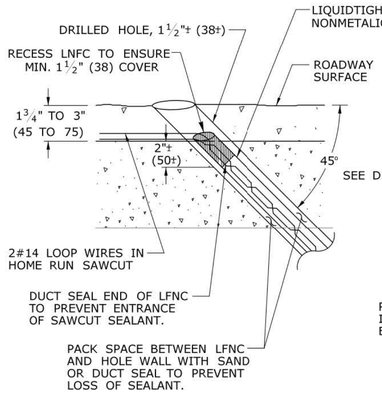

DETAIL "A"

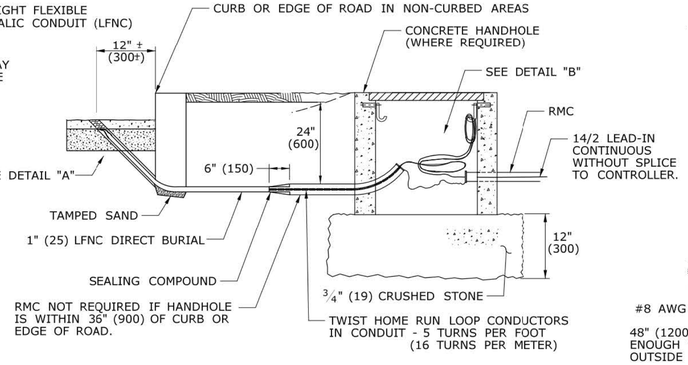

TYPICAL ELEVATION VIEW
LOOP DETECTOR LEAD-IN

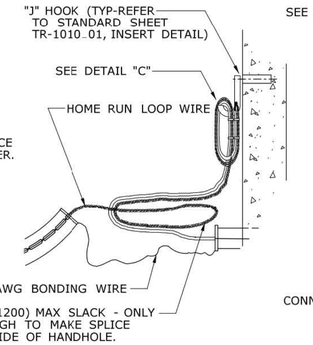

DETAIL "B"

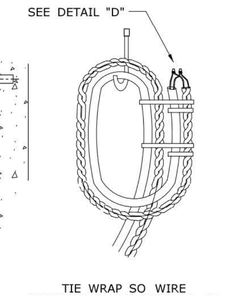

DETAIL "C"
FRONT VIEW

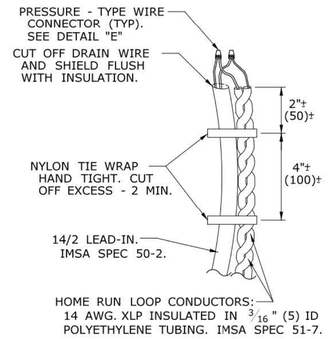

DETAIL "D"

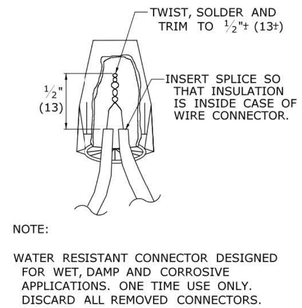

DETAIL "E"

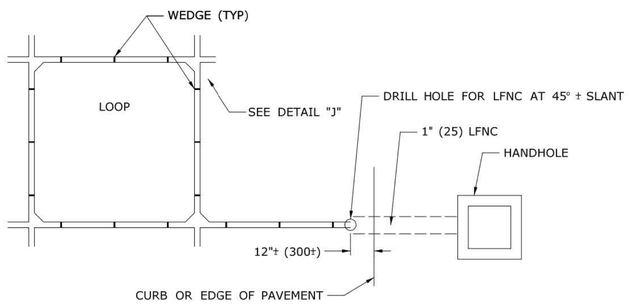

TYPICAL PLAN VIEW
LOOP DETECTOR SAWCUT AND LEAD-IN

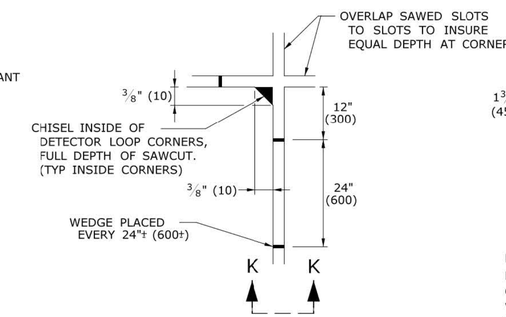

DETAIL "J"

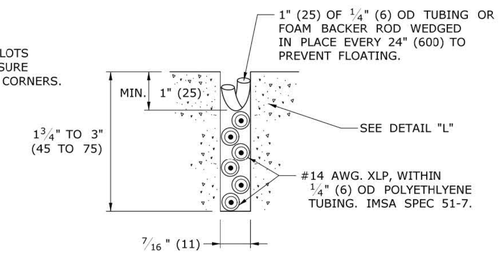

DETAIL "K"

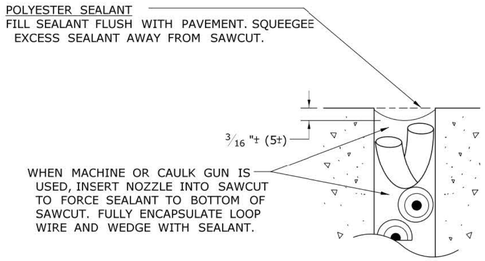

DETAIL "L"

NOTES:
REFER TO STANDARD SPECIFICATIONS, SECTION 11-11.
ONLY USE POLYESTER COMPOUND AS SEALANT, UNLESS OTHER TYPE IS APPROVED BY ENGINEER.
WET SAW CUT ONLY, DRY SAW CUT NOT PERMITTED.
RECOMMENDED SAW BLADE: 14" x ⅜" (350 x 10) PRODUCES 7/16" (11) SLOT.
SAW CUT LOOP & HOME RUN DEPTH TO ENSURE MIN. 1" (25) SEALANT COVERAGE.

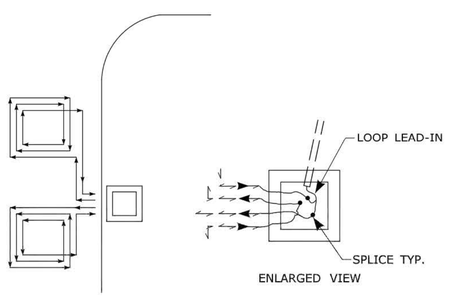

TYPICAL WINDING
SEGMENTED LOOPS, 3 TURNS EACH

TO CREATE A UNIFORM MAGNETIC FIELD, WIND ADJACENT LOOPS IN OPPOSITE DIRECTIONS.

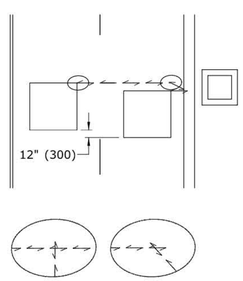

ACCEPTABLE SAW CUT

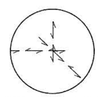

NOT ACCEPTABLE SAW CUT

DO NOT OVERLAP MORE THAN TWO SAWCUTS.

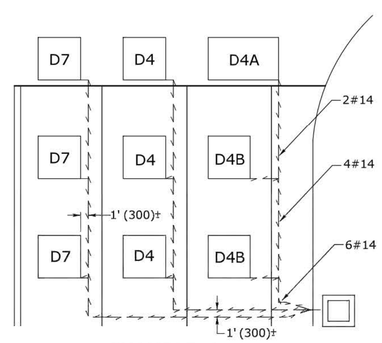

EXAMPLE A

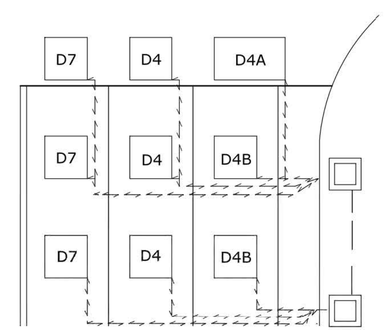

EXAMPLE B
REAR SEGMENTS ALSO USED FOR VOLUME COUNTS

SEE TRAFFIC SIGNAL PLAN FOR ACTUAL LOOP PLACEMENT, NUMBERS, ETC...
LOOP SEGMENTS ON SAME AMPLIFIERS MAY SHARE HOME RUN SAW CUT. SPLICE SEGMENTS IN SERIES.
LOOP SEGMENTS ON DIFFERENT AMPLIFIERS MUST BE IN SEPARATE HOME RUN SAW CUT.

LEGEND AS SHOWN ON TRAFFIC CONTROL SIGNAL PLAN:
- INDUCTIVE LOOP DETECTOR
- SAW CUT
- RIGID METAL CONDUIT
- HANDHOLE

REV.	DATE	REVISION DESCRIPTION
3	4-2014	DETAIL "B" - REVISED "J" HOOK NOTE.
2	7-2012	DELETED URETHANE SEALANT NOTE FROM DETAIL "L"
1	4-2012	MINOR REVISIONS.

THE INFORMATION, INCLUDING ESTIMATED QUANTITIES OF WORK, SHOWN ON THESE SHEETS IS BASED ON LIMITED INVESTIGATIONS BY THE STATE AND IS IN NO WAY WARRANTED TO INDICATE THE CONDITIONS OF ACTUAL QUANTITIES OF WORK WHICH WILL BE REQUIRED.

Plotted Date: 4/21/2014

DIMENSIONS ARE IN ENGLISH (.") & METRIC UNITS (mm). METRIC DIMENSIONS ARE ROUNDED:
- OVER 1" TO NEAREST 5 mm
- UNDER 1" TO NEAREST 1 mm.

NOT TO SCALE

STATE OF CONNECTICUT
DEPARTMENT OF TRANSPORTATION

Filename: CTDOT_TRAFFIC_STD.DGN Model: TR-1111_01

SUBMITTED BY: NAME/DATE/TIME: Tracy L. Fogarty, P.E. 2014.04.25 16:02:20-04'00'
APPROVED BY: NAME/DATE/TIME: Digitally signed by Charles S. Harlow, P.E. Date: 2014.04.29 14:27:33-04'00'

CTDOT STANDARD SHEET
OFFICE OF ENGINEERING

STANDARD SHEET TITLE: LOOP VEHICLE DETECTOR AND SAWCUT

STANDARD SHEET NO.: TR-1111_01

100% SUBMITTAL

MARK	DATE	MADE BY	CHECKED	DESCRIPTION

REVISIONS

AECOM, INC.
250 APPROACH DRIVE
ROCKY HILL, CT 06067
PHONE (860) 263-3800

EPA CONTRACT NO. EP-S1-06-01
DURHAM MEADOWS WATERLINE RD
DURHAM AND MIDDLETOWN, CONNECTICUT
TASK ORDER NO. 0060-RD-RD-01D5

TRAFFIC SIGNALS
LOOP DETECTOR DETAILS
CIVIL

PROJECT NO: 60275749
CAD DWG FILE: CZDUR508
DESIGNED BY: MCC
DRAWN BY: MCC
DEPT CHECK: GRS
PROJ CHECK: MWM
DATE: APRIL 2018
SCALE: AS NOTED

C-508

ANSI D – 26-Jun-18

MOVEMENT DIAGRAM

	NONE	PRE-EMPT 1																							
NTOR		PHASE 1			PHASE 2			PHASE 3			PHASE 4			PHASE 5			PHASE 6			PHASE 7			PHASE 8		
	FLASH	GRN	CL	CL	GRN	CL	CL	GRN	CL	CL	GRN	CL	CL	GRN	CL	CL	GRN	CL	CL	GRN	CL	CL	GRN	CL	CL
FACE 1	Y	◄G	◄G	G	G	Y	R	R	R	R	R	R	R	R	R	R									
2	Y	G	G	G	G	Y	R	R	R	R	R	R	R	R	R	R									
3	Y	R	R	R	G	Y	R	R	R	R	R	R	R	R	R	R									
4	R	R	R	R	R	R	R	R	R	R	G	Y	R	R	R	R									
5	R	R	R	R	R	R	R	R	R	R	G	G	G	G	Y	R									
6	Y	R	R	R	G	Y	R	R	R	R	R	R	R	R	R	R									
7	Y	◄G	◄G	G	G	Y	R	R	R	R	R	R	R	◄G	◄G ②	◄G ③									
8	Y	G	G	G	G	Y	R	R	R	R	R	R	R	G	G	G									
9	R	R	R	R	R	R	R	R	R	R	◄G	Y	R	R	R	R									
10	R	R	R	R	R	R	R	R	R	R	◄G	◄G	◄G	◄G	Y	R									
P	OFF	◄		DW	►			WO/	◄			DW		►											
INTERVALS: MIN GRN		5			15			7			5			9											
WALK								9 ①																	
PED CLR																									
VEH EXT		2.0			2.5						2.0			2.0											
MAX 1		15			45						11			20											
MAX 2		15			45						11			20											
YELLOW			3.0			5.0			4.0			3.6			4.0										
RED				0.5			1.1			0.1			1.2			1.0									
ADD INIT					0.8				COUNTDOWN																
MAX INIT					21																				
TBR									PEDESTRIAN																
TTR																									
MIN GAP					2.5				SIGNAL																
MODE		NON-LOCK			MIN RECALL			NON-LOCK			NON-LOCK			NON-LOCK			OFF			OFF			OFF		
INT START					THIS PHASE																				

ENERGY BY TOWN	ADDRESS # N/A
MAINT LEVEL 1	SERVICE POLE SNET 752
UNMETERED SERVICE	

INTERSECTION #037-202

SIGNAL FACES

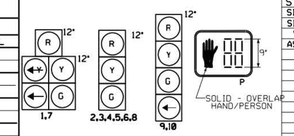

ALL INDICATIONS HAVE LED LAMPS.

OFFICE RECORD
REVISION #13
STC # 037-1204-01 SM # N/A
SIGNAL REVISED: 6-11-14
SIGNAL EQUIPMENT REPLACED AND ADDED EMERGENCY VEHICLE PRE-EMPTION UNDER PROJECT #172-386.
AS-BUILT PLAN DRAWN: 7-2014

PRE-EMPTION SETTINGS

	PRE-EMPT 1
PRIORITY	NO
DET. LOCK	YES
DELAY	0
ALT. MIN. GRN	5
ALT. YELLOW	PARENT
ALT. RED	PARENT
ALT. PED. CLR.	9
HOLD GREEN	15
HOLD YELLOW	5.0
HOLD RED	1.1
HOLD PHASE	2
EXIT PHASE	4
EXIT CALL	NONE

DETECTORS

IDENT	SIZE (WXL)	TURNS	MODE
D1	6' x 6'		PRESENCE
D1A	20' x 6'		PRESENCE
D2	6' x 6'		PRESENCE
D2A	6' x 6'		PRESENCE
D2B	6' x 6'		PRESENCE
D2C	6' x 6'		PRESENCE
D4	16' x 6'		PRESENCE
D5	7' x 6'		PRESENCE
D5A	10' x 6'		PRESENCE
D5B	14' x 6'		PRESENCE

PROGRAM

FUNCTION	TIME	DAYS
FLASH	2100-0600	DAILY
MAX 1	ALL TIMES	
MAX 2	FUTURE	

COORDINATION TYPE - NONE

CYCLE	OFFSET SEC	OFFSET %	PHASE SPLITS SEC / % 01	02	03	04	05	06	07	08

PERMIS PERIOD	
0	SEC

SYSTEM LOC MASTER

TECHNICAL NOTES

STANDARD OVERLAP SKIP FEATURES APPLY
PRE-EMPTION TO BE INOPERATIVE DURING FLASHING OPERATION.
MANUAL AND INTERVAL ADVANCE TO BE DISCONNECTED DURING PHASE 3 PEDESTRIAN CLEARANCE. INTERVAL.
① COUNTDOWN ONLY DURING FLASHING PEDESTRIAN CLEARANCE INTERVAL.
PHASE 2 ON TO OMIT PHASE 1.
② TO BE ◄Y G IF PHASE 2 IS NEXT.
③ TO BE G IF PHASE 2 IS NEXT.
D1A TO ONLY EXTEND PHASE 1.
D5, D5A AND D5B TO CALL AND EXTEND PHASE 4 AND PHASE 5.

LEGEND:
R RED
Y YELLOW
G GREEN
FL. FLASHING
◄R RED ARROW
◄Y YELLOW ARROW
◄G GREEN ARROW
WO/ WALK/ PED. CLR
D.W. DON'T WALK

DIVISION OF TRAFFIC ENGINEERING CADD

STATE OF CONNECTICUT
DEPARTMENT OF TRANSPORTATION
BUREAU OF ENGINEERING & CONSTRUCTION
DIVISION OF TRAFFIC ENGINEERING

TRAFFIC CONTROL SIGNAL

TOWN OF DURHAM
ROUTE 17 (MAIN ST.) AT
ROUTE 147 (MIDDLEFIELD RD.)
AND HADDAM QUARTER RD.

REV # 13	TRAFFIC	DATE	ELECTRICAL	DATE
ENGINEER	AC	3/12	PSF	5/12
DRAWN BY	AC	3/12	JMF	5/12
CHECKED BY	SDE	3/12	LNC	5/12
SUBMITTED BY	SDE	4/12	LNC	5/12
APPROVED BY	T.L. FOGARTY		L.N. CONROY	
DATE	6-26-12		6-26-12	

ORIGINAL SIGNED

CONSTRUCTION NOTES :

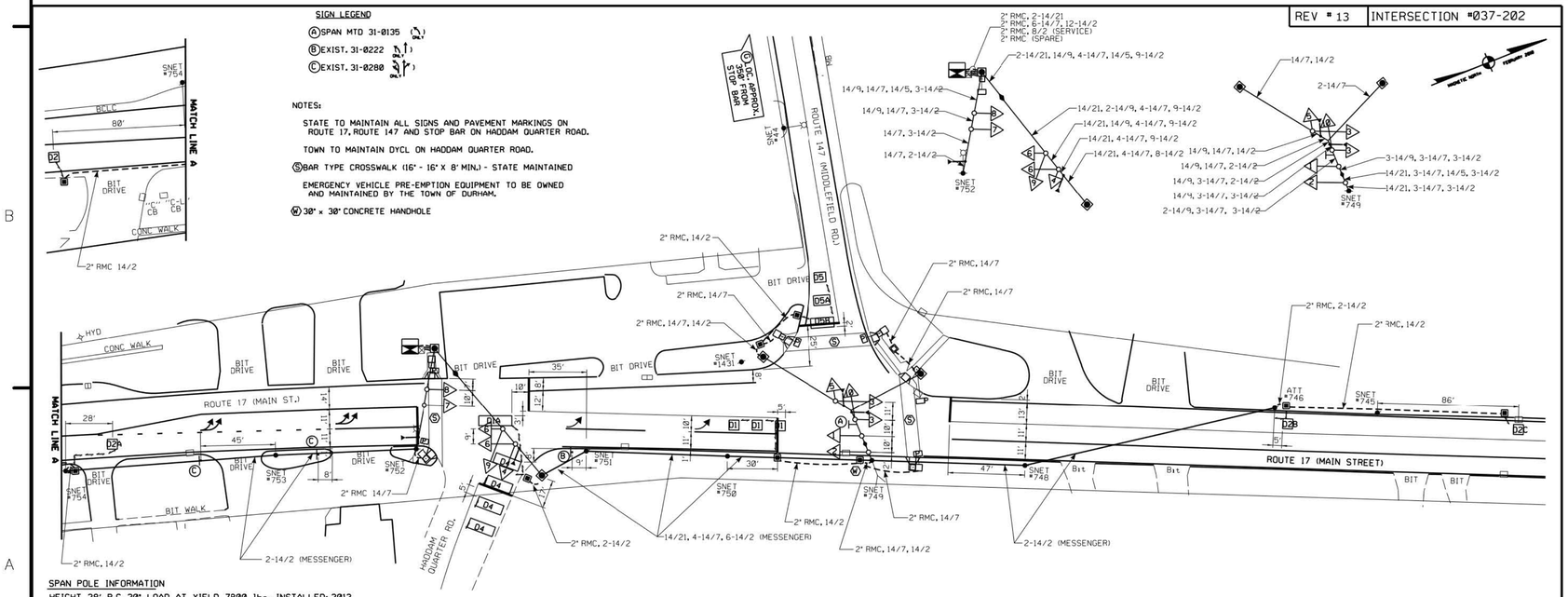

REV # 13	INTERSECTION #037-202

NO.	DATE	INIT.	DESCRIPTION

REVISIONS

$FILE$

PROPOSED WOOD SPAN POLE
EXISTING WOOD SPAN POLE
PROPOSED STEEL SPAN POLE
EXISTING STEEL SPAN POLE
PROPOSED UTILITY POLE
EXISTING UTILITY POLE
PEDESTRIAN SIGNAL FACE
DIRECTIONAL ARW. FOR PUSH BUTTON
PROPOSED CONTROLLER
TRAFFIC SIGNAL FACE
PEDESTRIAN PUSH BUTTON & SIGN
PEDESTAL MOUNTING
PROPOSED P.M.C. (RIGID METAL CONDUIT)
EXISTING P.M.C. (RIGID METAL CONDUIT)
DET. LEADS IN SAW CUT
AUXILIARY TERMINATION CABINE
AUXILIARY EQUIPMENT CABINET
VIDEO DETECTOR
OPTICAL DETECTOR
SD SYSTEM DETECTOR
EXISTING CONTROLLER
PROPOSED HANDHOLE
EXISTING HANDHOLE
SIDEWALK RAMP
SONIC DETECTOR
GUY WIRE
LOOP DETECTOR
MAGNETIC DETECTOR
CABLE CLOSURE

DRAWN BY : AC
DESIGNED BY AC
DATE PLOTTED $DATE$

STATE OF CONNECTICUT
DEPARTMENT OF TRANSPORTATION

TOWN OF DURHAM
ROUTE 17 (MAIN ST.) AT
ROUTE 147 (MIDDLEFIELD RD.)
AND HADDAM QUARTER RD.

OFFICE OF ENGINEERING

TOWN: DURHAM
DRAWING TITLE: TRAFFIC CONTROL SIGNAL PLAN
PROJECT NO. 172-386
DRAWING NO.
SHEET NO.

100% SUBMITTAL

MARK	DATE	MADE BY	CHECKED	DESCRIPTION

REVISIONS

AECOM
AECOM, INC.
500 NORTH MAIN STREET DRIVE
ROCKY HILL, CT 06067
PHONE (860) 263-3800

EPA CONTRACT NO. EP-S1-06-01
DURHAM MEADOWS WATERLINE RD
DURHAM AND MIDDLETOWN, CONNECTICUT
TASK ORDER NO. 0060-RD-RD-0105

MAIN STREET AT MIDDLEFIELD ROAD
EXISTING TRAFFIC CONTROL SIGNAL PLAN
CIVIL

REV # 13 INTERSECTION #037-202

PROJECT NO: 60275749
CAD DWG FILE: CZDUR509
DESIGNED BY: MCC
DRAWN BY: MCC
DEPT CHECK: GRS
PROJ CHECK: MWM
DATE: APRIL 2018
SCALE: NOT TO SCALE

C-509

ANSI D – 26-Jan-18

MOVEMENT DIAGRAM

NONE

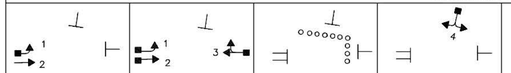

NTOR		PHASE 1			PHASE 2			PHASE 3			PHASE 4			PHASE 5			PHASE 6			PHASE 7			PHASE 8		
	FLASH	GRN	CL	CL	GRN	CL	CL	GRN	CL	CL	GRN	CL	CL	GRN	CL	CL	GRN	CL	CL	GRN	CL	CL	GRN	CL	CL
FACE # 1	Y	G	Y	G	G	Y	R	R	R	R	R	R	R												
2	Y	G	G	G	G	Y	R	R	R	R	R	R	R												
3	Y	R	R	R	G	Y	R	R	R	R	R	R	R												
4	R	R	R	R	R	R	R	R	R	R	G	Y	R												
P	OFF	WØ			DW			WØ			DW														
					YIELD PT.																				

INTERVALS	PHASE 1			PHASE 2			PHASE 3			PHASE 4			PHASE 5			PHASE 6			PHASE 7			PHASE 8		
MIN GRN	5			25						6														
WALK							7																	
PED CLR							10																	
VEH EXT	1.5			6.0						3														
MAX 1	15			50						25														
MAX 2	15			50						25														
YELLOW		3			4			3.0			4													
RED			0			2			0			1.5												
ADD INIT																								
MAX INIT																								
TBR										9														
TTR										6														
MIN GAP										1.5														
MODE	NON-LOCK			MIN RECALL			NON-LOCK			NON-LOCK														
INT START				THIS PHASE																				

DETECTORS

IDENT	SIZE (WXL)	TURNS	MODE
D1	6' X 6'	3	PRESENCE
D2	10' X 6'	4	PRESENCE
D2A	9' X 6'	4	PRESENCE
D4	8' X 6'	3	DELAY 6"
D4A	10' X 6'	3	DELAY 6"
D4B	13' X 6'	3	DELAY 6"

PROGRAM

FUNCTION	TIME	DAYS
FLASH	2100-0600	DAILY
MAX 1	ALL TIMES	
MAX 2	FUTURE	
PATTERN 1	0600-0900 1400-1800	M-F
PATTERN 2	FUTURE	
FREE	ALL OTHER TIMES	

COORDINATION TYPE -TBC

CYCLE	OFFSET SEC	OFFSET %	Ø1	Ø2	Ø3	Ø4	Ø5	Ø6	Ø7	Ø8
120	1									

PHASE SPLITS — SEC / %

PERMIS PERIOD Ø	PERMIS PERIOD SEC

SYSTEM LOC MASTER
037-204
037-208

TECHNICAL NOTES

STANDARD OVERLAP SKIP FEATURES APPLY

PHASE 2 ON TO OMIT PHASE 1

ENERGY BY STATE | ADDRESS #

MAINT LEVEL 1 | SERVICE POLE SNET 775

UNMETERED SERVICE

INTERSECTION # 037-204

SIGNAL FACES

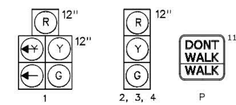

ALL INDICATIONS HAVE LED LAMPS.

OFFICE RECORD

REVISION #12

JOB # N/A | SM # N/A

TRAFFIC DESIGN: JLO | ELECT. DESIGN:N/A

SIGNAL REVISED: 5-14-14

ADDED TDC & REVISED TIMINGS UNDER PROJECT #172-384.

STATE OF CONNECTICUT
DEPARTMENT OF TRANSPORTATION
BUREAU OF ENGINEERING & CONSTRUCTION
DIVISION OF TRAFFIC ENGINEERING

TRAFFIC CONTROL SIGNAL

TOWN OF DURHAM
ROUTE 17 (MAIN ST.) AT
ROUTE 68 (WALLINGFORD RD.)

REV # 4	TRAFFIC	DATE	ELECTRICAL	DATE
ENGINEER	JLO	7-92	MRM	10-92
DRAWN BY	DB/FP	8-92	RJW	10-92
CHECKED BY	MM	12-92	MRM	10-92
SUBMITTED BY	MM	12-92	MJG	12-92
APPROVED BY	WILLIAM A. PEACE		D.P. McCALL	
DATE	DEC 10, 1992		12-10-92	

ORIGINAL SIGNED

LEGEND:
R RED
Y YELLOW
G GREEN
FL. FLASHING
◄R RED ARROW
◄Y YELLOW ARROW
◄ GREEN ARROW
WØ WALK/ PED. CLR
D.W. DON'T WALK

DIVISION OF TRAFFIC ENGINEERING CADD

CONSTRUCTION NOTES :

REV # 12 | INTERSECTION # 037-204

SIGN LEGEND

Ⓐ 31-0329 (◄ ↑ ►)

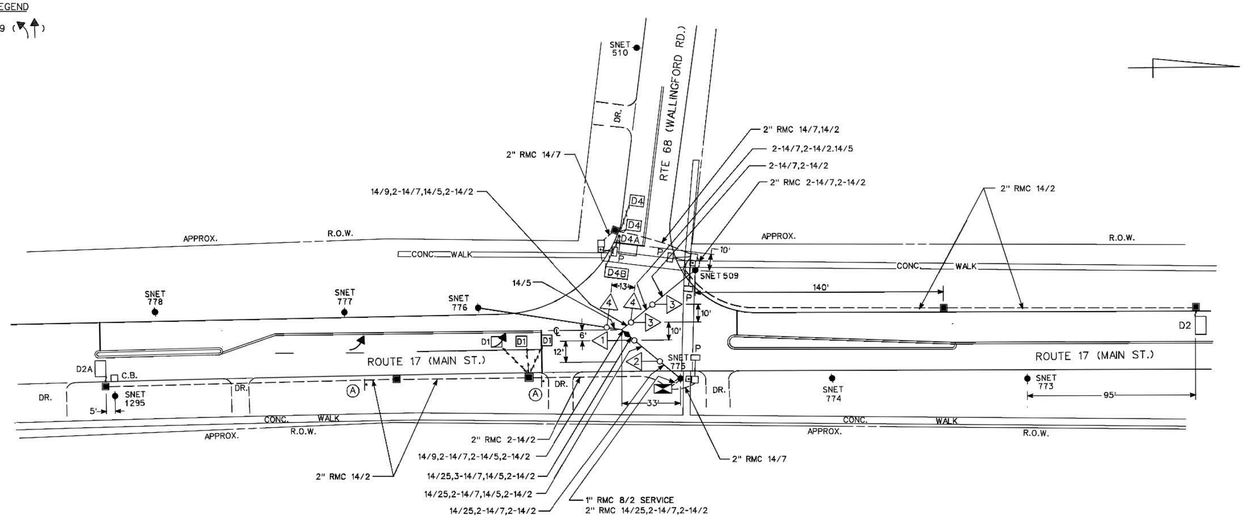

NOTES:
SEE SEPARATE PLAN FOR PAVEMENT MARKINGS AND SIGNING.

NO.	DATE	INIT.	DESCRIPTION

REVISIONS

SCALE 1" = 40'

\\sh3dgs18\CTDOT_projects\172_0384_0386_0398_2007\Traffic\Signals\TR_MSH_TCS_037_204_012_.dgn

○ PROPOSED WOOD SPAN POLE
● EXISTING WOOD SPAN POLE
PROPOSED STEEL SPAN POLE
EXISTING STEEL SPAN POLE
PROPOSED UTILITY POLE
EXISTING UTILITY POLE
PEDESTRIAN SIGNAL FACE
DIRECTIONAL ARW. FOR PUSH BUTTON
PROPOSED CONTROLLER
TRAFFIC SIGNAL FACE
PEDESTRIAN PUSH BUTTON & SIGN
PEDESTAL MOUNTING
PROPOSED R.M.C. (RIGID METAL CONDUIT)
EXISTING R.M.C. (RIGID METAL CONDUIT)
DET. LEADS IN SAW CUT
AUXILIARY TERMINATION CABINET
AUXILIARY EQUIPMENT CABINET
VIDEO DETECTOR
OPTICAL DETECTOR
SD SYSTEM DETECTOR
EXISTING CONTROLLER
PROPOSED HANDHOLE
EXISTING HANDHOLE
SIDEWALK RAMP
SONIC DETECTOR
GUY WIRE
LOOP DETECTOR
MAGNETIC DETECTOR
CABLE CLOSURE

DRAWN BY : MJC
DESIGNED BY : JLO
DATE PLOTTED : 6/14/2014

STATE OF CONNECTICUT
DEPARTMENT OF TRANSPORTATION

TOWN OF DURHAM
ROUTE 17 (MAIN ST.) AT
ROUTE 68 (WALLINGFORD RD.)

OFFICE OF ENGINEERING

TOWN: TOWN NAME 1
TOWN NAME 2

DRAWING TITLE: TRAFFIC CONTROL SIGNAL PLAN

PROJECT NO. XXX-XXXX
DRAWING NO. XXXX
SHEET NO. XXXX

ANSI D — 26-Jan-18

100% SUBMITTAL

MARK	DATE	MADE BY	CHECKED	DESCRIPTION

REVISIONS

AECOM
ACCON, INC.
500 NORTH MAIN STREET DRIVE
ROCKY HILL, CT 06067
PHONE (860) 263-3800

REV # 00 | INTERSECTION # XXX-XXXX

EPA CONTRACT NO. EP-S1-06-01
DURHAM MEADOWS WATERLINE RD
DURHAM AND MIDDLETOWN, CONNECTICUT
TASK ORDER NO. 0060-RD-RO-0105

MAIN STREET AT WALLINGFORD ROAD
EXISTING TRAFFIC CONTROL SIGNAL PLAN

CIVIL

PROJECT NO:	60275749
CAD DWG FILE:	CZDUR510
DESIGNED BY:	MCC
DRAWN BY:	MCC
DEPT CHECK:	GRS
PROJ CHECK:	MWM
DATE:	APRIL 2018
SCALE:	NOT TO SCALE

C-510

MOVEMENT DIAGRAM

NONE	PHASE 1	PHASE 2 (PRE-EMPT. 1)	PHASE 3	PHASE 4	PHASE 5	PHASE 6	PHASE 7	PHASE 8
NTOR								

FACE #	FLASH	PHASE 1 GRN	PHASE 1 CL	PHASE 1 CL	PHASE 2 GRN	PHASE 2 CL	PHASE 2 CL	PHASE 3 GRN	PHASE 3 CL	PHASE 3 CL	PHASE 4 GRN	PHASE 4 CL	PHASE 4 CL	PHASE 5 GRN	PHASE 5 CL	PHASE 5 CL	PHASE 6 GRN	PHASE 6 CL	PHASE 6 CL	PHASE 7 GRN	PHASE 7 CL	PHASE 7 CL	PHASE 8 GRN	PHASE 8 CL	PHASE 8 CL
1	Y	←G	←Y	G	G	Y	R				R	R	R												
2	Y	G	G	G	G	Y	R				R	R	R												
3	Y	R	R	R	G	Y	R				R	R	R												
4	R	R	R	R	R	R	R				G	Y	R												
5	Y	←G	←Y	G	G	Y	R				R	R	R												
						←YIELD PT.																			

INTERVALS	PHASE 1	PHASE 2	PHASE 3	PHASE 4	PHASE 5	PHASE 6	PHASE 7	PHASE 8
MIN GRN	5	15		7				
WALK								
PED CLR								
VEH EXT	2.0	2.5		2				
MAX 1	15	40		27				
MAX 2	12	40		18				
YELLOW	3.0	4.4		3.0				
RED	0.1	1.0		1.5				
ADD INIT								
MAX INIT								
TBR								
TTR								
MIN GAP		2.5						
MODE	MIN RECALL	MIN RECALL	OFF	NON-LOCK	OFF	OFF	OFF	OFF
INT START		THIS PHASE						

ENERGY BY TOWN | ADDRESS # N/A
MAINT LEVEL 5 | SERVICE POLE SNET 783S
UNMETERED SERVICE

INTERSECTION # 037-208

SIGNAL FACES

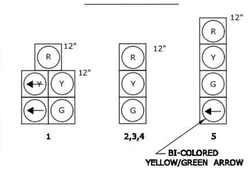

ALL INDICATIONS HAVE LED LAMPS.
FACE 5 HAS TUNNEL VISORS AND LOUVERS.

PRE-EMPTION SETTINGS

	PRE-EMPT 1
PRIORITY	NO
DET. LOCK	YES
DELAY	0
ALT. MIN. GRN	5
ALT. YELLOW	PARENT
ALT. RED	PARENT
ALT. PED. CLR.	0
HOLD GREEN	15
HOLD YELLOW	4.4
HOLD RED	1
HOLD PHASE	2
EXIT PHASE	4
EXIT CALL	NONE

OFFICE RECORD

TIR # **037-0908-01** SM # **N/A**
SIGNAL IN OPERATION: 5-14-14
SIGNAL INSTALLED UNDER PROJECT No. 172-384.
AS-BUILT PLAN DRAWN: 5-2014

STATE OF CONNECTICUT
DEPARTMENT OF TRANSPORTATION
BUREAU OF ENGINEERING & CONSTRUCTION
DIVISION OF TRAFFIC ENGINEERING

TRAFFIC CONTROL SIGNAL

TOWN OF DURHAM
ROUTE 17 (MAIN ST.) AT
PICKETT LANE

REV #	TRAFFIC	DATE	ELECTRICAL	DATE
ENGINEER	JLO	3/12	PSF	5/12
DRAWN BY	MJC	3/12	MJC	5/12
CHECKED BY	AC	3/12	LNC	5/12
SUBMITTED BY	SDE	6/12	LNC	6/12
APPROVED BY	T.L. FOGARTY		L.N. CONROY	
DATE	6/26/12		6/26/12	

ORIGINAL SIGNED

DETECTORS

IDENT	SIZE (WXL)	TURNS	MODE
D1	20' X 6'	3	PRESENCE
D2	6' X 6'	4	PRESENCE
D2A	7' X 6'	4	PRESENCE
D2B	7' X 6'	4	PRESENCE
D2C	6' X 6'	4	PRESENCE
D4	10' X 6'	3	PRESENCE
D4A	7' X 6'	3	PRESENCE
D4B	9' X 6'	3	PRESENCE

PROGRAM

FUNCTION	TIME	DAYS
FLASH	2100-0600	DAILY
MAX 1	ALL OTHER TIMES	DAILY
MAX 2	1600-1800	M-F
PATTERN 1	**0600-0900 1400-1600**	M-F
PATTERN 2	1600-1800	M-F
FREE	ALL OTHER TIMES	

COORDINATION TYPE -TBC

CYCLE SEC	OFFSET SEC	OFFSET %	Ø1	Ø2	Ø3	Ø4	Ø5	Ø6	Ø7	Ø8
120	19									
60	19									

PHASE SPLITS SEC / %

PERMIS PERIOD	SEC

SYSTEM LOC	TECHNICAL NOTES
MASTER	STANDARD OVERLAP SKIP FEATURES APPLY
037-204	PRE-EMPTION TO BE INOPERATIVE DURING FLASHING OPERATION.
037-208	DETECTOR D1 TO ONLY EXTEND PHASE 1.
	PHASE 2 ON TO OMIT PHASE 1.
	ARTERY DETECTORS TO BE NON-ACTUATING DURING COORDINATION.

LEGEND:
R RED | Y YELLOW | G GREEN | FL. FLASHING
R RED ARROW | Y YELLOW ARROW | GREEN ARROW | WØ WALK/ PED. CLR | D.W. DON'T WALK

DIVISION OF TRAFFIC ENGINEERING CADD

SIGN LEGEND:
Ⓐ EXIST. 31-1702 (NO PEDESTRIAN CROSSING)

NOTES:
STATE TO MAINTAIN ALL PAVEMENT MARKINGS ON ROUTE 17 AND ALL STOP BARS.
TOWN OF DURHAM TO MAINTAIN D.Y.C.L. ON PICKETT LANE.
EMERGENCY PRE-EMPTION EQUIPMENT TO BE OWNED AND MAINTAINED BY THE TOWN OF DURHAM.
Ⓣ **BAR TYPE CROSSWALK (24" - 24" x 8' MIN.)-TOWN MAINTAINED**
Ⓦ **30" X 30" CONCRETE HANDHOLE**

REV # | INTERSECTION # 037-208

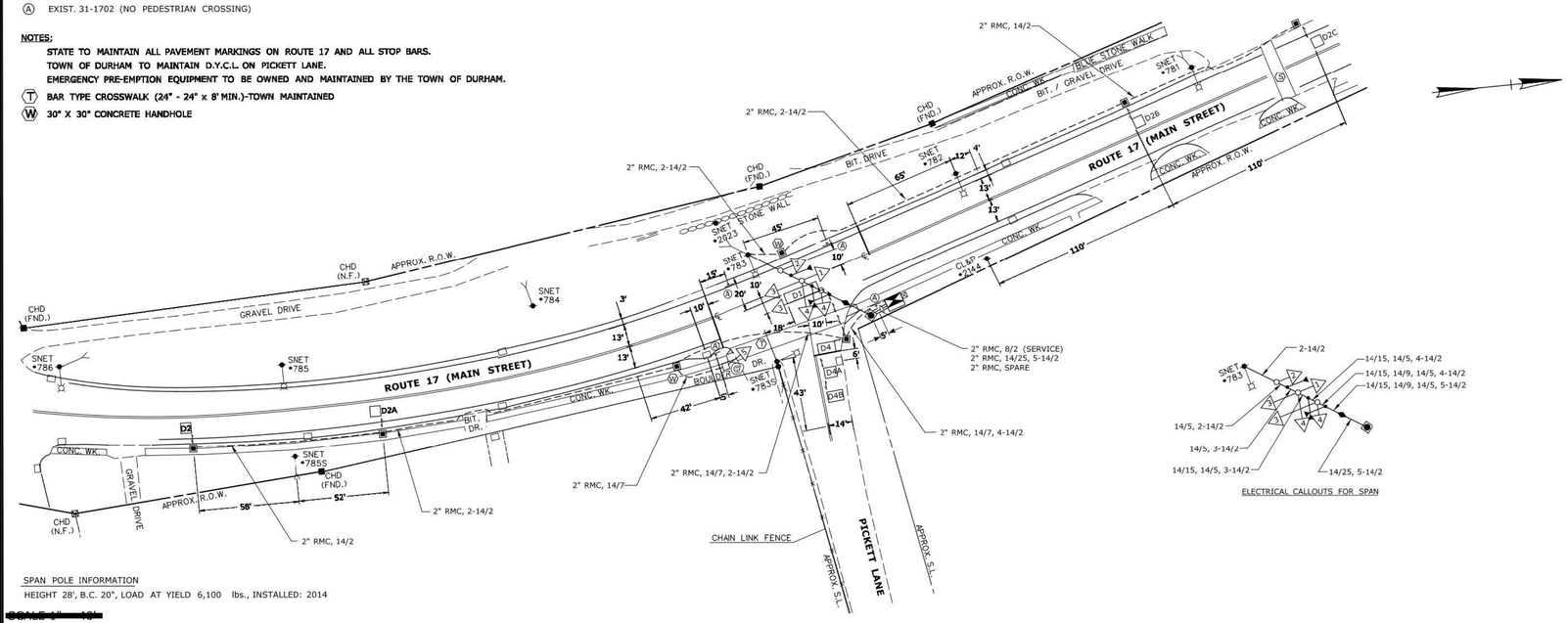

ELECTRICAL CALLOUTS FOR SPAN

SPAN POLE INFORMATION
HEIGHT 28', B.C. 20", LOAD AT YIELD 6,100 lbs., INSTALLED: 2014

~~SCALE 1" = 10'~~

\\sh3dgs18\CTDOT_projects\172_0384_0386_0398_2007\Traffic\Signals\TR_MSH_TCS_037_208_000.dgn

○ PROPOSED WOOD SPAN POLE
● EXISTING WOOD SPAN POLE
□ PROPOSED STEEL SPAN POLE
■ EXISTING STEEL SPAN POLE
◇ PROPOSED UTILITY POLE
● EXISTING UTILITY POLE
PEDESTRIAN SIGNAL FACE
DIRECTIONAL ARW. FOR PUSH BUTTON
PROPOSED CONTROLLER
TRAFFIC SIGNAL FACE
PEDESTRIAN PUSH BUTTON & SIGN
PEDESTAL MOUNTING
PROPOSED R.M.C. (RIGID METAL CONDUIT)
EXISTING R.M.C. (RIGID METAL CONDUIT)
DET. LEADS IN SAW CUT
AUXILIARY TERMINATION CABINET
AUXILIARY EQUIPMENT CABINET
VIDEO DETECTOR
OPTICAL DETECTOR
SD SYSTEM DETECTOR
EXISTING CONTROLLER
PROPOSED HANDHOLE
EXISTING HANDHOLE
SIDEWALK RAMP
SONIC DETECTOR
GUY WIRE
LOOP DETECTOR
MAGNETIC DETECTOR
CABLE CLOSURE

DRAWN BY : MJC
DESIGNED BY : JLO
DATE PLOTTED : 5/29/2014

STATE OF CONNECTICUT
DEPARTMENT OF TRANSPORTATION

TOWN OF DURHAM
ROUTE 17 (MAIN ST.) AT
PICKETT LANE

ANSI D – 26-Jan-18

CONSTRUCTION NOTES :

NO.	DATE	INIT.	DESCRIPTION
			REVISIONS

OFFICE OF ENGINEERING

TOWN: DURHAM

DRAWING TITLE: TRAFFIC CONTROL SIGNAL PLAN

PROJECT NO. 172-384
DRAWING NO. TCS-1
SHEET NO.

MARK	DATE	MADE BY	CHECKED	DESCRIPTION
				REVISIONS

100% SUBMITTAL

AECOM
AECOM, INC.
500 NORTH MAIN STREET DRIVE
ROCKY HILL, CT 06067
PHONE (860) 263-3800

REV # | INTERSECTION # 037-208

EPA CONTRACT NO. EP-S1-08-01
DURHAM MEADOWS WATERLINE RD
DURHAM AND MIDDLETOWN, CONNECTICUT
TASK ORDER NO. 0060-RD-RD-0105

MAIN STREET AT PICKETT LANE
EXISTING TRAFFIC CONTROL SIGNAL PLAN

CIVIL

PROJECT NO: 60275749
CAD DWG FILE: CZDUR511
DESIGNED BY: MCC
DRAWN BY: MCC
DEPT CHECK: GRS
PROJ CHECK: MWM
DATE: APRIL 2018
SCALE: NOT TO SCALE

C-511

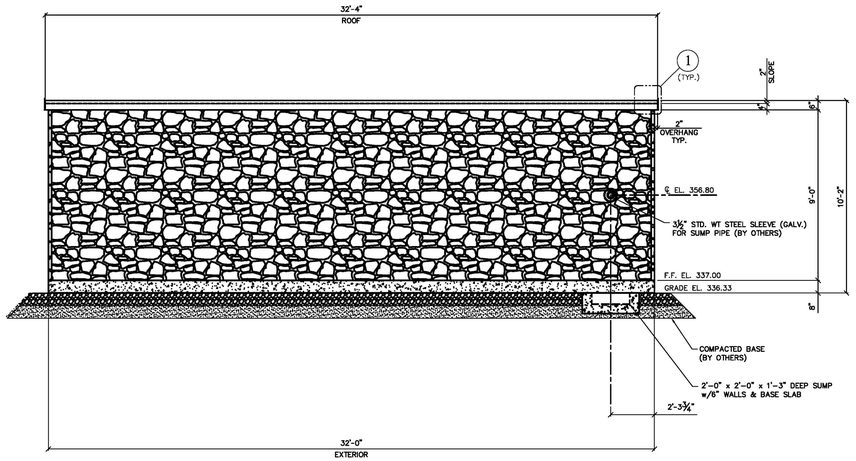

A/A2 FRONT EXTERIOR ELEVATION
NOT TO SCALE

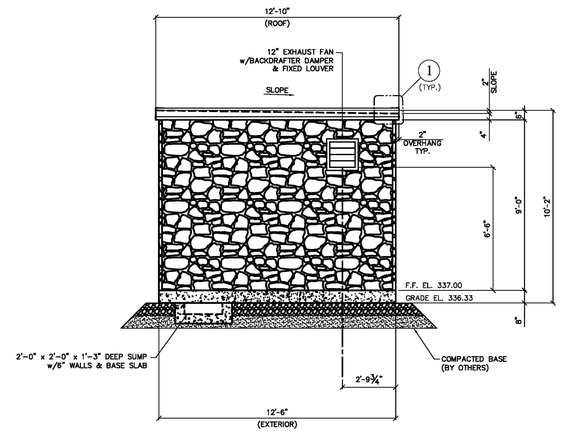

B/A2 RIGHT EXTERIOR ELEVATION
NOT TO SCALE

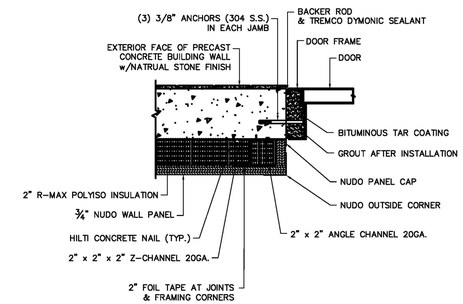

SECTION @ DOOR JAMB
(N.T.S.)

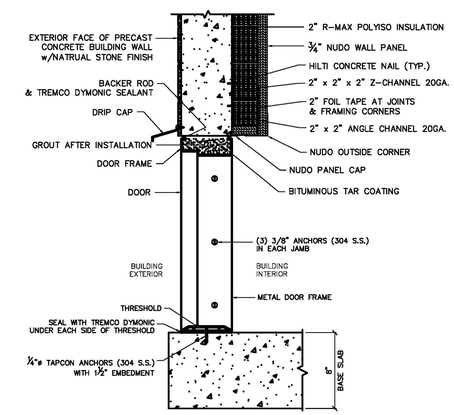

TYPICAL DOOR JAMB DETAIL
(N.T.S.)

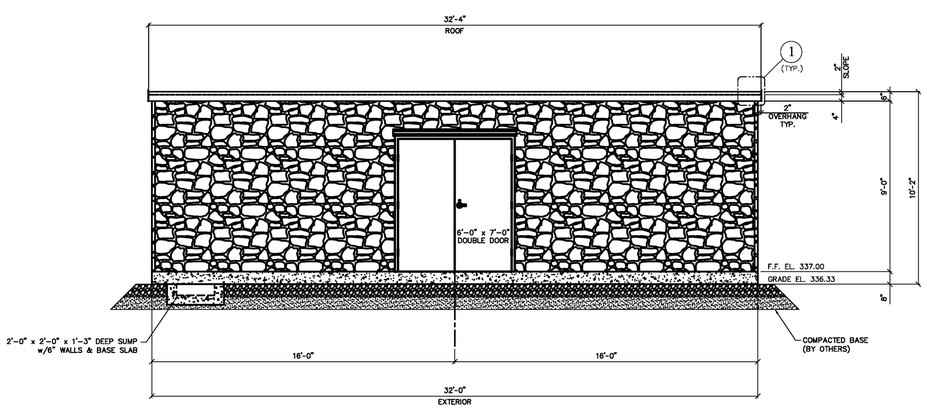

C/A2 BACK EXTERIOR ELEVATION
NOT TO SCALE

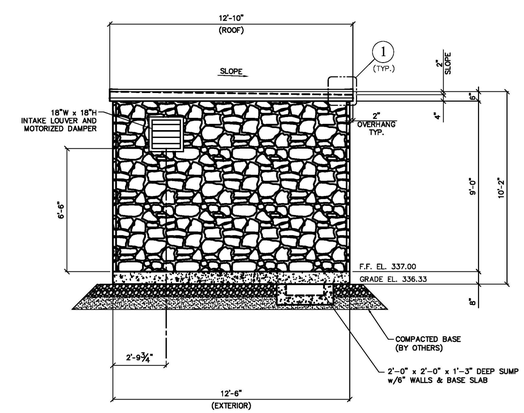

D/A2 LEFT EXTERIOR ELEVATION
NOT TO SCALE

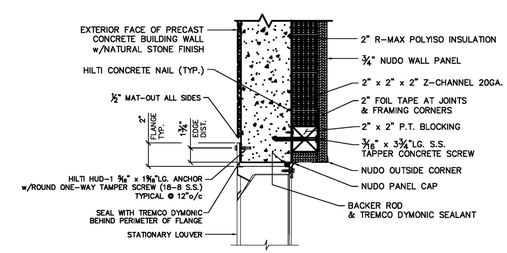

TYPICAL LOUVER DETAIL
(N.T.S.)

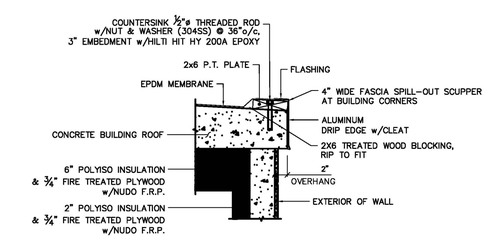

1 ROOF DETAIL
NOT TO SCALE

MARK	DATE	MADE BY	CHECKED	DESCRIPTION

REVISIONS

AECOM, INC.
500 NEWPORT CENTER DRIVE
ROCKY HILL, CT 06067
PHONE (860) 263-3800

AECOM

STATE OF CONNECTICUT
MICHAEL W. WALSH
No. 001391
LICENSED ARCHITECT
7/30/18

EPA CONTRACT NO. EP-S1-06-01
DURHAM MEADOWS WATERLINE RD
DURHAM AND MIDDLETOWN, CONNECTICUT
TASK ORDER NO. 0060-RD-RD-01D5

CITY OF MIDDLETOWN
WATER METER BUILDING DETAILS
ARCHITECTURAL

PROJECT NO:	60275749
CAD DWG FILE:	A-501
DESIGNED BY:	MEM
DRAWN BY:	MEM
DEPT CHECK:	AC
PROJ CHECK:	MWM
DATE:	APRIL 2018
SCALE:	AS NOTED

A-501

P: 60275749-DUR\D
ANSI B – 6-Apr-18

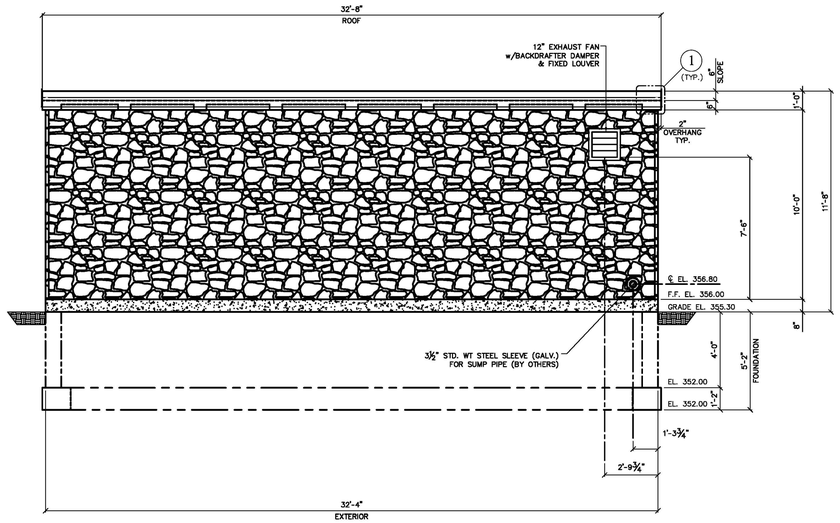

A/A2 FRONT EXTERIOR ELEVATION
NOT TO SCALE

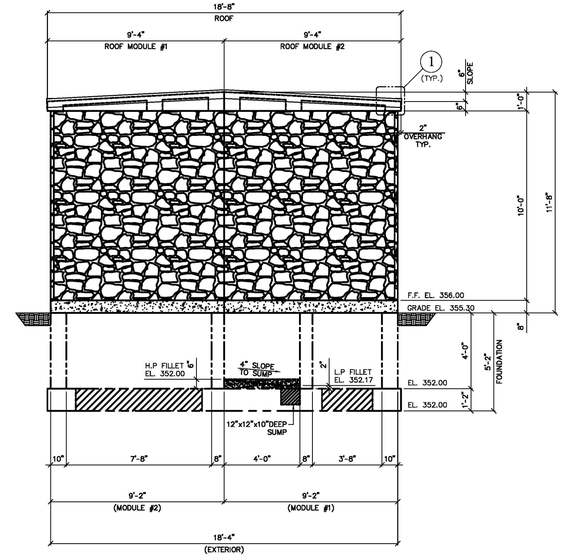

B/A2 RIGHT EXTERIOR ELEVATION
NOT TO SCALE

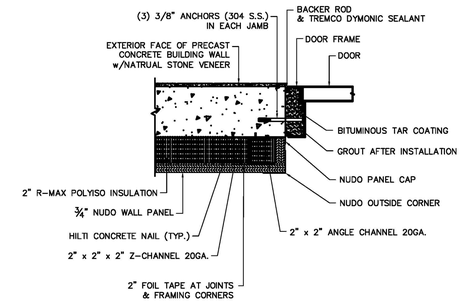

SECTION @ DOOR JAMB
(N.T.S.)

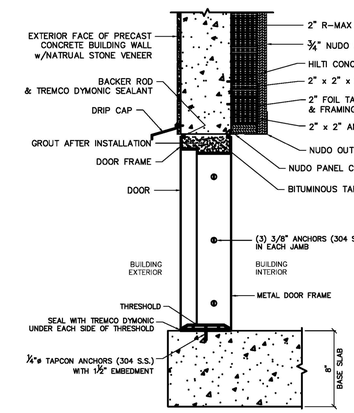

TYPICAL DOOR JAMB DETAIL
(N.T.S.)

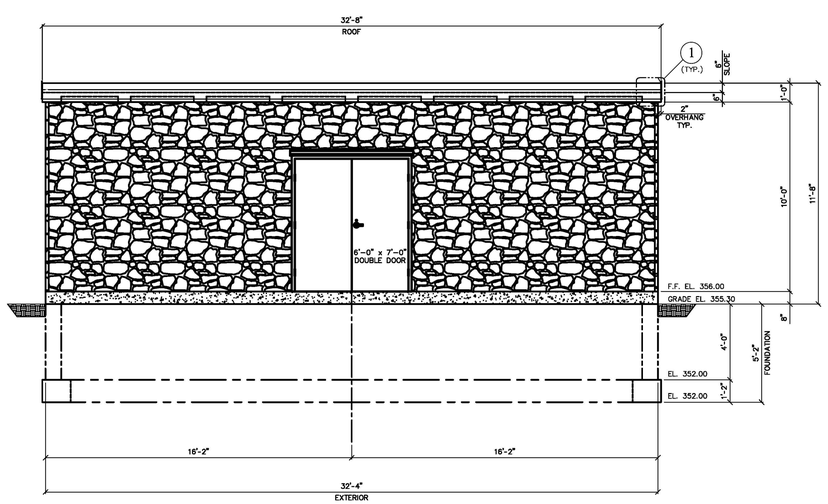

C/A2 BACK EXTERIOR ELEVATION
NOT TO SCALE

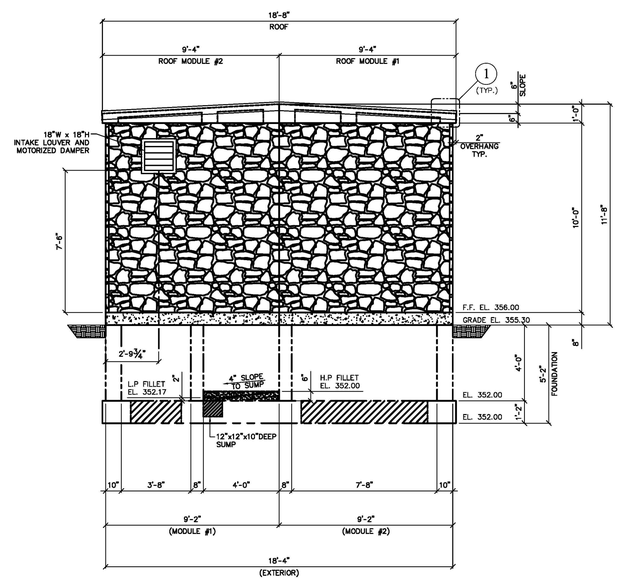

D/A2 LEFT EXTERIOR ELEVATION
NOT TO SCALE

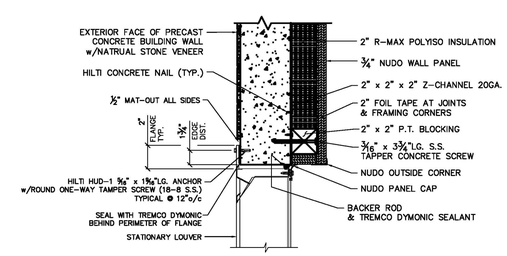

TYPICAL LOUVER DETAIL
(N.T.S.)

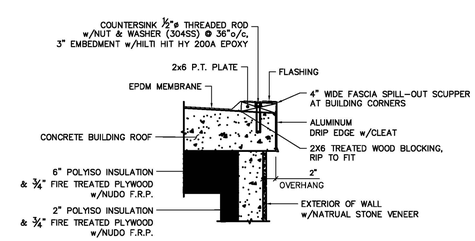

1 **ROOF DETAIL**
NOT TO SCALE

MARK	DATE	MADE BY	CHECKED	DESCRIPTION

REVISIONS

AECOM, INC.
500 CROTON POND DRIVE
ROCKY HILL, CT 06067
PHONE (860) 263-3800

AECOM

STATE OF CONNECTICUT
BERNARD OTTO
No. 0013391
LICENSED ARCHITECT
4/30/18

EPA CONTRACT NO. EP-S1-06-01
DURHAM MEADOWS WATERLINE RD
DURHAM AND MIDDLETOWN, CONNECTICUT
TASK ORDER NO. 0060-RD-RD-D1D5

CITY OF MIDDLETOWN
TALCOTT RIDGE BOOSTER STATION DETAILS
ARCHITECTURAL

PROJECT NO:	60275749
CAD DWG FILE:	A-502
DESIGNED BY:	MEM
DRAWN BY:	MEM
DEPT CHECK:	AC
PROJ CHECK:	MWM
DATE:	APRIL 2018
SCALE:	

A-502

P: 60275749-DUR\D
ANSI B - 6-Apr-18

DWG. ABBREV.	ITEM	SYMBOL
	GATE VALVE	
	KNIFE VALVE	K
	PLUG VALVE	
	BUTTERFLY VALVE	
	BALL VALVE	
	CHECK VALVE	
H.G.	HOSE GATE	HG
	QUICK DISCONNECT COUPLING	
	FLEXIBLE HOSE	
SG	SLUICE GATE	
	EXISTING PIPE & FACILITIES	
	PROPOSED PIPE & FACILITIES	
	PIPE: 6" & SMALLER	
	PIPE: 8" & LARGER	
	FLANGE	
BF	BLIND FLANGE	BF BF
	WELDED	
PO	PUSH ON JOINT	
	GROOVED COUPLING (PIPE 8" & SMALLER)	
	GROOVED COUPLING (PIPE 10" & LARGER)	
	SLEEVE COUPLING	
	RESTRAINED SLEEVE COUPLING	
	FLANGE ADAPTER	
	RESTRAINED FLANGE ADAPTER	
	BOLTED SPLIT SLEEVE COUPLING (PIPE 6" & SMALLER)	
	BOLTED SPLIT SLEEVE COUPLING (PIPE 8" & LARGER)	
	EXPANSION JOINT W/CONTROL RODS	
	CONCENTRIC REDUCER	
	ECCENTRIC REDUCER FLAT ON TOP	F.O.T.
	ECCENTRIC REDUCER FLAT ON BOTTOM	F.O.B.
	WYE STRAINER	
	INSULATION (PIPE 8" & SMALLER)	
	INSULATION (PIPE 10" & LARGER)	

DWG. ABBREV.	ITEM	SYMBOL
	EXISTING PIPE TO BE REMOVED	
FE	FLOW RATE CONTROLLER	
FE	VENTURI FLOW METER	
FE	MAGNETIC FLOW METER	
	ORIFICE PLATE	
	ROTAMETER	
G	GAUGE	
	RUPTURE DISC	
WS	WATER SURFACE	
	DIRECTION OF FLOW	
	PITCH PIPE DOWN IN DIRECTION OF ARROW	
	LIMITS OF WORK (TRADE, CONTRACT, ETC.)	
	POINT OF CONNECTION NEW WORK TO EXISTING WORK	
	WALL CASTINGS	
FLG x PO	FLANGE AND PUSH ON JOINT	WATERSTOP
PO x PO	PUSH ON JOINT AND PUSH ON JOINT	
PO x PE	PUSH ON JOINT AND PLAIN END	
FLG x FLG	FLANGE AND FLANGE	
FLG x PE	FLANGE AND PLAIN END	
	EQUIPMENT	
	CENTRIFUGAL PUMP	
DWG. ABBREV.	ITEM	SYMBOL
	ACTUATORS	
	MOTOR OPERATED	M
	SOLENOID OPERATED	S
	DIAPHRAGM	D
	CYLINDER – HYDRAULIC	H
	CYLINDER – PNEUMATIC	P
	EQUIPMENT MOTOR	M

GENERAL NOTES

1. THE CONTRACTOR SHALL MAKE ALL REQUIRED FIELD MEASUREMENTS TO VERIFY EXISTING AND CONTRACT INTERFACE DIMENSIONS, LOCATIONS, AND OTHER CONDITIONS.
2. THE CONTRACTOR SHALL NOT RE–USE EXISTING PIPING, VALVES, OR FITTINGS UNLESS SO DIRECTED BY THE ENGINEER.
3. WHEN MAKING CONNECTIONS TO EXISTING PIPING, THE CONTRACTOR SHALL MATCH EXISTING CONNECTION TYPE, USED RESTRAINED SLEEVE COUPLINGS, OR FLANGE ADAPTORS.
4. ALL PIPING UNDER CONCRETE SLABS OR STRUCTURES SHALL BE FULLY ENCASED IN CONCRETE, UNLESS OTHERWISE NOTED.
5. ALL PIPING ENCASED IN CONCRETE SHALL HAVE PUSH–ON JOINTS AT ALL STRUCTURAL EXPANSION JOINTS.
6. REFER TO INSTRUMENTATION DRAWINGS FOR INSTRUMENTATION AND CONTROL SYSTEMS. INSTRUMENT LOCATIONS INDICATED ON MECHANICAL DRAWINGS ARE APPROXIMATE.
7. IN–LINE INSTRUMENTATION SHALL BE PROVIDED WITH ISOLATED PRESSURE TAPS,
8. REFER TO CIVIL DRAWINGS FOR CONTINUATION OF PIPING OUTSIDE OF STRUCTURES.
9. FLOOR SLEEVES SHALL PROJECT AT LEAST 4 INCHES ABOVE FINISHED FLOORS UNLESS OTHERWISE INDICATED.
10. ALL PIPING PENETRATIONS THROUGH INTERIOR AND EXTERIOR WALLS SHALL BE SEALED WATER AND GAS TIGHT.
11. ALL FLEXIBLE CONNECTORS INCLUDING EXPANSION JOINTS AND SLEEVE COUPLINGS SHALL BE RESTRAINED.
12. SMALL DIAMETER PIPING IS SHOWN DIAGRAMMATICALLY. FIELD ROUTING IS SUBJECT TO THE APPROVAL OF ENGINEER AND SHALL NOT INTERFERE WITH ACCESS TO THE SPACE OR EQUIPMENT OR OPERATION OF ANY EQUIPMENT OR VALVE.
13. ALL MECHANICAL EQUIPMENT SHALL BE ISOLATED FROM PIPING LOADS AND DYNAMICS BY SUITABLE CONNECTORS IN ACCORDANCE WITH EQUIPMENT MANUFACTURER'S WRITTEN INSTALLATION INSTRUCTIONS.
14. CONTRACTOR SHALL PROTECT ALL PIPING, VALVES, AND EQUIPMENT FROM DAMAGE DURING CONSTRUCTION. ANY DAMAGE SHALL BE REPAIRED BY CONTRACTOR AT HIS SOLE EXPENSE.
15. PROVIDE CONCRETE HOUSEKEEPING OR BASE PADS FOR ALL FLOOR MOUNTED MECHANICAL EQUIPMENT.

GENERAL MECHANICAL PROCESS ABBREVIATIONS

A	AIR
ACFM	ACTUAL CUBIC FEET PER MINUTE
AFF	ABOVE FINISHED FLOOR
ANCH.	ANCHOR
APPROX.	APPROXIMATE
ARCH.	ARCHITECTURAL
BOD	BOTTOM OF DUCT
CFM	CUBIC FEET PER MINUTE
CHEM.	CHEMICAL
CI	CAST IRON
℄	CENTERLINE
C.L.D.I.	CEMENT LINED DUCTILE IRON
CMU	CONCRETE MASONARY UNIT
C.O.	CLEANOUT
CONC.	CONCRETE
CONN.	CONNECTION
CONT.	CONTINUATION
CPVC	CHLORINATED POLYVINYLCHLORIDE
CS	CARBON STEEL
DEG. F.	DEGREES FAHRENHEIT
DET.	DETAIL
D.I.	DUCTILE IRON
DIA.	DIAMETER
DN	DOWN
DWG'S.	DRAWINGS
ECC. RED.	ECCENTRIC REDUCER
EFF.	EFFLUENT
EFF. %	% EFFICIENCY
ELEC.	ELECTRICAL
EL.	ELEVATION
ELL.	ELBOW
ENCL.	ENCLOSURE
EXIST.	EXISTING
FE	FLOW ELEMENT
F.F.	FLAT FACE
FIN. FL.	FINISHED FLOOR
FIN. GR.	FINISHED GRADE
FIT	FLOW INDICATING TRANSMITTER
FLEX.	FLEXIBLE
FL., FLG.	FLANGE
F.O.B.	FLAT ON BOTTOM
F.O.S.	FLAT ON SIDE
F.O.T.	FLAT ON TOP
FPM	FEET PER MINUTE
FS	FLOW SWITCH
FT.	FEET
FT / MIN	FEET PER MINUTE
GAL	GALLONS
GALV.	GALVANIZED
GPM	GALLONS PER MINUTE
H.G.	HOSE GATE
Hg	MERCURY
H.P.	HIGH POINT
HP	HORSE POWER
HPT	HOSE PIPE THREAD
HVAC	HEATING VENTILATION
I.D.	INSIDE DIAMETER
IN.	INCHES
INSUL.	INSULATION
INV.	INVERT
IPT	IRON PIPE THREAD
LB.	POUND
LG.	LONG
L.P.	LOW POINT
L.R. ELL.	LONG RADIUS ELBOW
L.R. RED. BASE ELL.	LONG RADIUS REDUCING BASE ELBOW
L.R. RED. ELL.	LONG RADIUS REDUCING ELBOW
LSH	PRESSURE SWITCH LOW
LSP	LIQUID SAMPLE PORT
LxW	LENGTH x WIDTH
MAX.	MAXIMUM
MATL.	MATERIAL
MECH.	MECHANICAL
MGD	MILLION GALLONS PER DAY
MH	MANHOLE
MIN.	MINIMUM
M.J.	MECHANICAL JOINT
N.C.	NORMALLY CLOSED
N.O.	NORMALLY OPEN
NO.	NUMBER
NOM.	NOMINAL
NPT	NATIONAL PIPE THREAD
NTS	NOT TO SCALE
O.C.	ON CENTER
O.D.	OUTSIDE DIAMETER
ODP	OPEN DRIP PROOF
OPER.	OPERATING
OS&Y	OUTSIDE SCREW AND YOKE
P	PRESSURE GAUGE
PE	PLAIN END
PL	PLATE
PLUMB.	PLUMBING
PRI.	PRIMARY
PS	PRESSURE SWITCH
PSH	PRESSURE SWITCH HIGH
PSI	POUNDS PER SQUARE INCH
PSIA	POUNDS PER SQUARE INCH ABSOLUTE
PSIG	POUNDS PER SQUARE INCH GAGE
PVC	POLYVINYL CHLORIDE
R	RADIUS
RED.	REDUCER
RED. FLG.	REDUCING FLANGE
REF.	REFERENCE
REINF.	REINFORCING
REQ'D.	REQUIRED
RPM	REVOLUTIONS PER MINUTE
SAD	SUPPLY AIR DUCT
SCH.	SCHEDULE
SH.	SHEET
SPD	SUMP PUMP DISCHARGE
SPECS.	SPECIFICATIONS
SQ.	SQUARE

GENERAL MECHANICAL PROCESS ABBREVIATIONS CONTINUED

S.S.	STAINLESS STEEL
STD.	STANDARD
STR.	STRUCTURAL
TEFC	TOTALLY ENCLOSED FAN COOLED
TEMP.	TEMPERATURE
THK.	THICK
T.O.C.	TOP OF CONCRETE
T.O.D.	TOP OF DUCT
TYP.	TYPICAL
V	VENT
VD	VOLUME DAMPER
W/	WITH
WxH	WIDTH x HEIGHT
WC	WATER COLUMN
WP	WEATHER PROTECTED
WPI	WEATHER PROTECTED TYPE I
XPROOF	EXPLOSION PROOF

MECHANICAL PROCESS EQUIPMENT ABBREVIATIONS

AU	COMPOSITE SAMPLER
BCR	BRIDGE CRANE
BLW	BLOWER
CAD	CARBON ADSORBER
CCD	CROSS COLLECTOR DRIVE
CCOL	CROSS COLLECTOR
CHMD	CHAMBER
CLSF	CLASSIFIER
CNV	CONVEYOR
COMP	COMPRESSOR
CYCL	CYCLONE
DTG	DRAFT TUBE GATE
F	FAN
FIL	FILTER
GEN	GENERATOR
GRI	GRINDER
HEX	HEAT EXCHANGER
HPU	HYDRAULIC POWER UNIT
HST	HOIST
LCD	LONGITUDINAL COLLECTOR DRIVE
LCOL	LONGITUDINAL COLLECTOR
MIX	MIXER
MG	MAINTENANCE GATE
P	PUMP
PG	PREFABRICATED SLIDE GATE
PRS	WASH PRESS
RG	ROLLER GATE
SCR	SCREEN
SCRB	SCRUBBER
SDG	STACKING DISK GATE
SIL	SILENCER
SG	SLUICE GATE
SKM	SKIMMER
SL	STOP LOG
W	WELL

100% SUBMITTAL

MARK	DATE	MADE BY	CHECKED	DESCRIPTION

REVISIONS

AECOM, INC.
500 SOUTH ROBERTS DRIVE
ROCKY HILL, CT 06067
PHONE (860) 263-3800

AECOM

EPA CONTRACT NO. EP-S1-06-01
DURHAM MEADOWS WATERLINE RD
DURHAM AND MIDDLETOWN, CONNECTICUT
TASK ORDER NO. 0060-RD-RD-01D5

LEGEND, GENERAL NOTES, AND ABBREVIATIONS

MECHANICAL

PROJECT NO:	60275749
CAD DWG FILE:	M–001
DESIGNED BY:	ASM
DRAWN BY:	ASM
DEPT CHECK:	GRS
PROJ CHECK:	MWM
DATE:	APRIL 2018
SCALE:	AS NOTED

M-001

ANSI D – 24-Jun-18

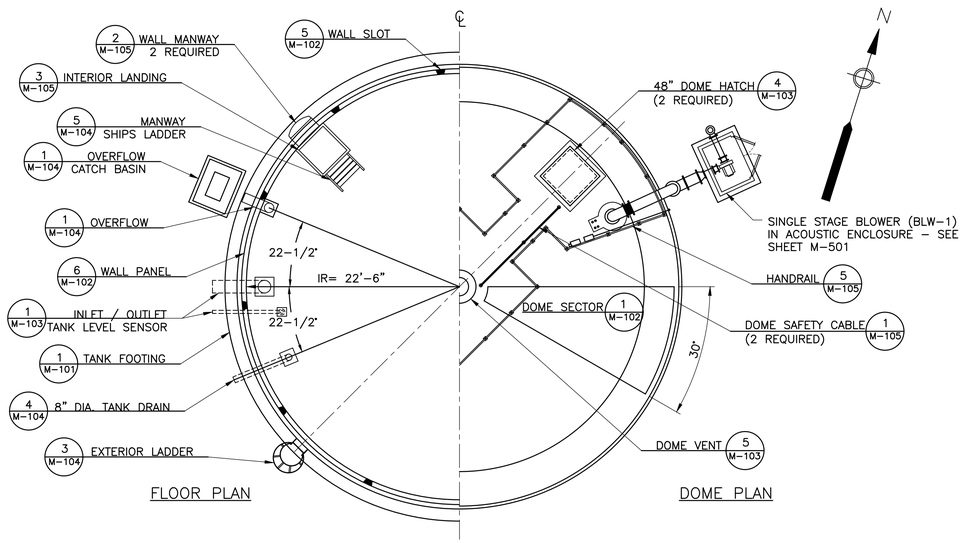

PLAN

SCALE: 1/8" = 1'-0"

NOTES:
1. TWO SHOTCRETE ANTENNA PADS REQUIRED UNDER DOME RING.
2. PROVIDE PIPE SUPPORT PADS AS REQUIRED.
3. PROPOSED DOMESTIC EQUALIZATION STORAGE = 249,800 GAL.
4. PROPOSED FIRE DEMAND STORAGE = 345,000 GAL.
5. PROPOSED EMERGENCY STORAGE = 202,200 GAL.

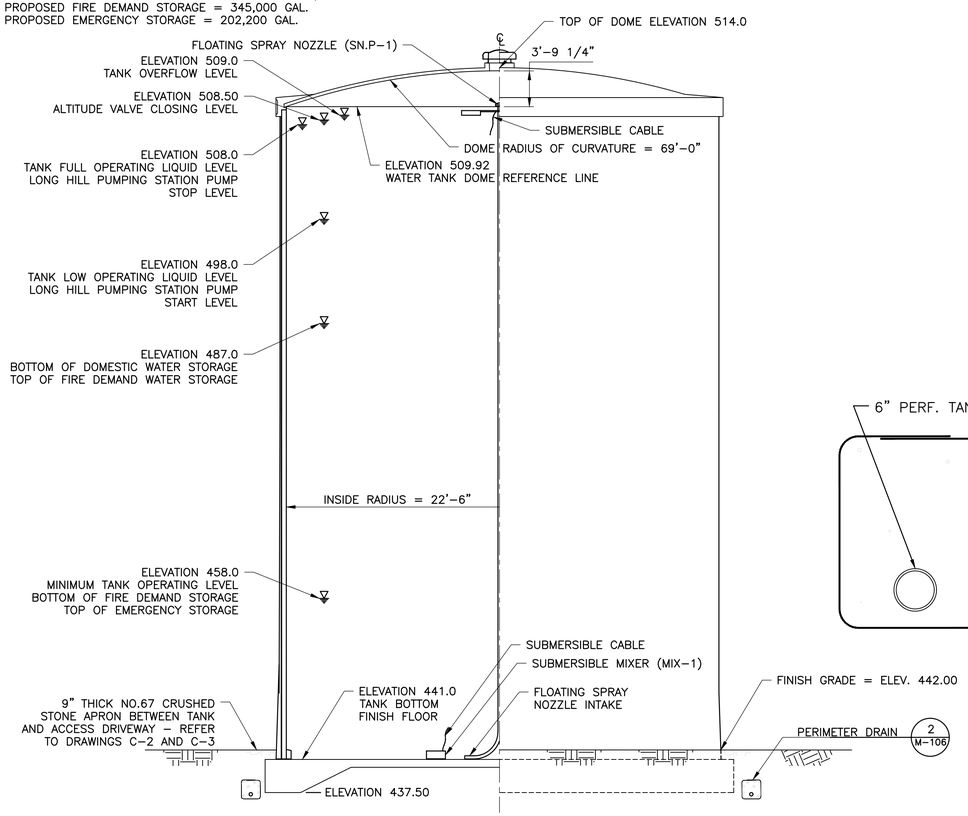

TANK SECTION & ELEVATION

SCALE: 1/8" = 1'-0"

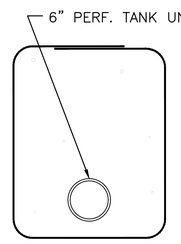

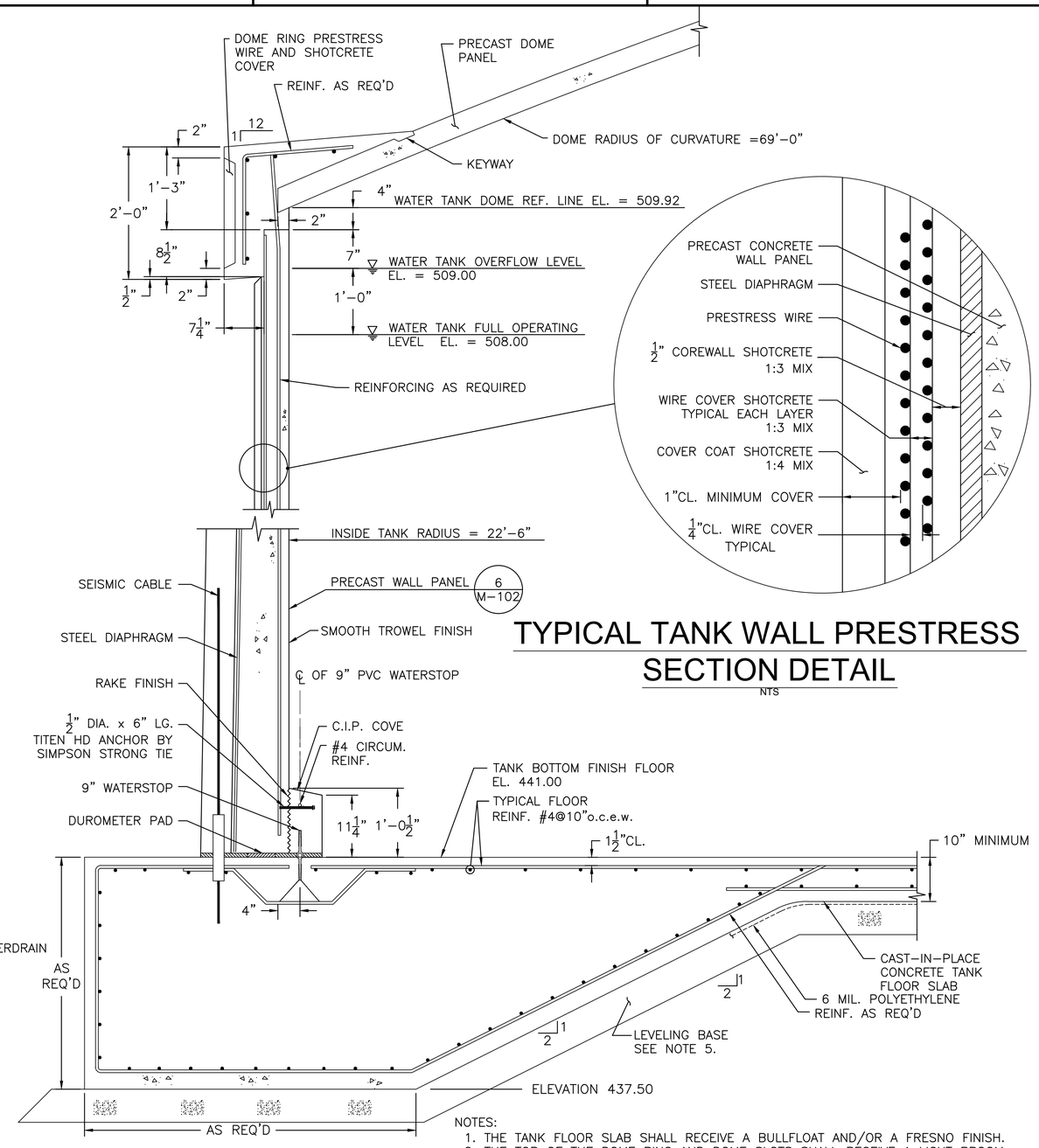

TYPICAL TANK WALL PRESTRESS SECTION DETAIL

NTS

WALL SECTION

NTS

1 / M-101

NOTES:
1. THE TANK FLOOR SLAB SHALL RECEIVE A BULLFLOAT AND/OR A FRESNO FINISH.
2. THE TOP OF THE DOME RING AND DOME SLOTS SHALL RECEIVE A LIGHT BROOM FINISH.
3. FOUNDATION, FLOOR, DOME, COVE, AND WALL CONCRETE, f'c = 4,000 psi.
   COREWALL AND WIRE COVER SHOTCRETE, f'c = 4,500 psi, 1:3 MIX.
   COVERCOAT SHOTCRETE, f'c = 4,500 psi, 1:4 MIX.
   ALL REINFORCING SHALL BE GRADE 60.
4. FOOTING REINFORCING SHALL BE DETERMINED BY TANK DESIGNER.
5. REFER TO CONTRACT DOCUMENTS FOR LEVELING BASE SPECIFICATION, COMPACTION REQUIREMENTS, AND FOUNDATION PREPARATION. LEVELING BASE MATERIAL SHALL BE PROVIDED BENEATH THE TANK FLOOR, FOOTING AND BOTTOM OF PIPE ENCASEMENTS.

100% SUBMITTAL

MARK	DATE	MADE BY	CHECKED	DESCRIPTION

REVISIONS

AECOM
AECOM, INC.
250 APPLEWOOD DRIVE
ROCKY HILL, CT 06067
PHONE (860) 263-3800

EPA CONTRACT NO. EP-S1-06-01
DURHAM MEADOWS WATERLINE RD
DURHAM AND MIDDLETOWN, CONNECTICUT
TASK ORDER NO. 0060-RD-RD-0105

CITY OF MIDDLETOWN

TANK PLAN AND SECTIONS

MECHANICAL

PROJECT NO:	60275749
CAD DWG FILE:	M-101-6
DESIGNED BY:	ASM
DRAWN BY:	ASM
DEPT CHECK:	GRS
PROJ CHECK:	MWM
DATE:	APRIL 2018
SCALE:	AS NOTED

M-101

ANSI D - 30-Mar-18

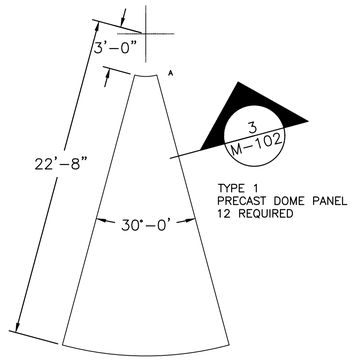

NOTES:
1. RADIAL DIMENSIONS ARE HORIZONTAL PROJECTIONS.
2. DOME PANELS, DOME RING, AND DOME SLOTS SHALL RECEIVE A LIGHT BROOM FINISH.

DOME SECTOR 1 / M-102

NOT TO SCALE

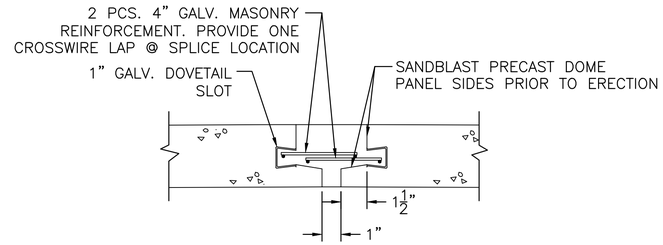

RADIAL DOME JOINT REINFORCING 3 / M-102

NTS

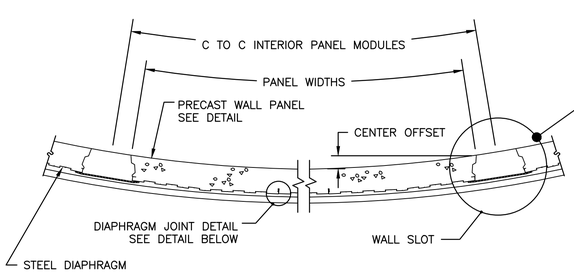

TYPICAL CIRCUMFERENTIAL WALL SECTION

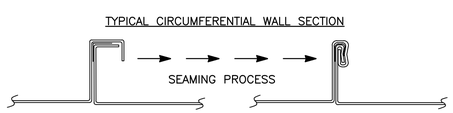

DIAPHRAGM JOINT DETAIL

WALL PANEL AND JOINT 4 / M-102

NTS

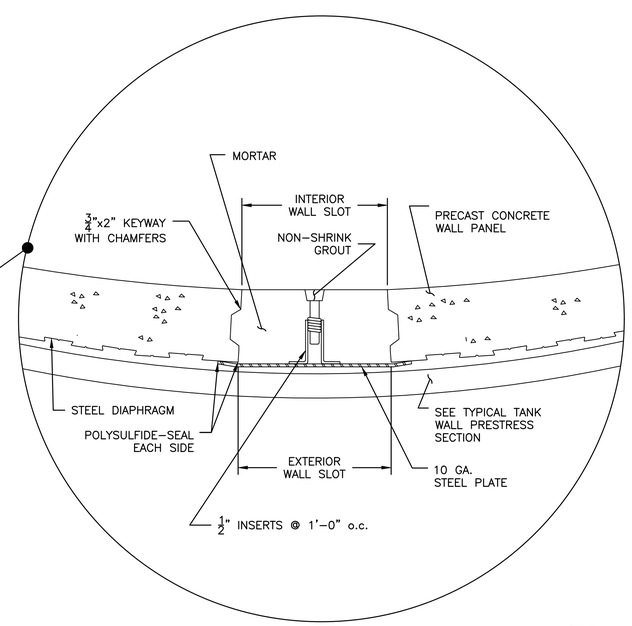

WALL SLOT DETAIL 5 / M-102

NTS

NOTE:
1. WALL PANELS SHALL RECEIVE A HORIZONTAL RAKE FINISH FOR THE BOTTOM RAKE OF THE PANEL AND A TOWELED SMOOTH INTERIOR FINISH FOR THE REST OF THE PANEL.

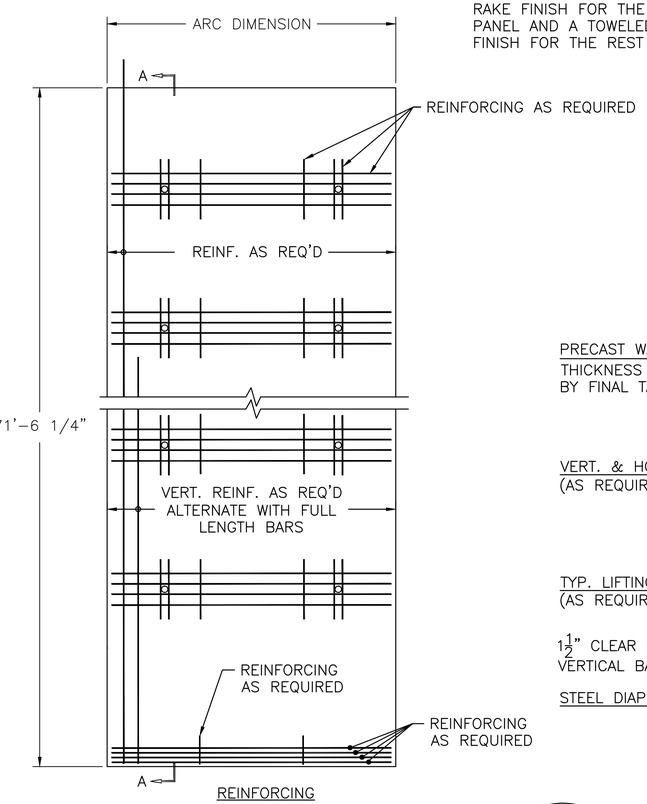

PRECAST WALL PANEL 6 / M-102

NTS

MARK	DATE	MADE BY	CHECKED	DESCRIPTION

REVISIONS

100% SUBMITTAL

AECOM, INC.
500 WESTPARK DRIVE
ROCKY HILL, CT 06067
PHONE (860) 263-3800

EPA CONTRACT NO. EP-S1-06-01
DURHAM MEADOWS WATERLINE RD
DURHAM AND MIDDLETOWN, CONNECTICUT
TASK ORDER NO. 0060-RD-RD-0105

CITY OF MIDDLETOWN TANK DETAILS I

MECHANICAL

PROJECT NO:	60275749
CAD DWG FILE:	M-101-6
DESIGNED BY:	ASM
DRAWN BY:	ASM
DEPT CHECK:	GRS
PROJ CHECK:	MWM
DATE:	APRIL 2018
SCALE:	AS NOTED

M-102

ANSI D - 30-Mar-18

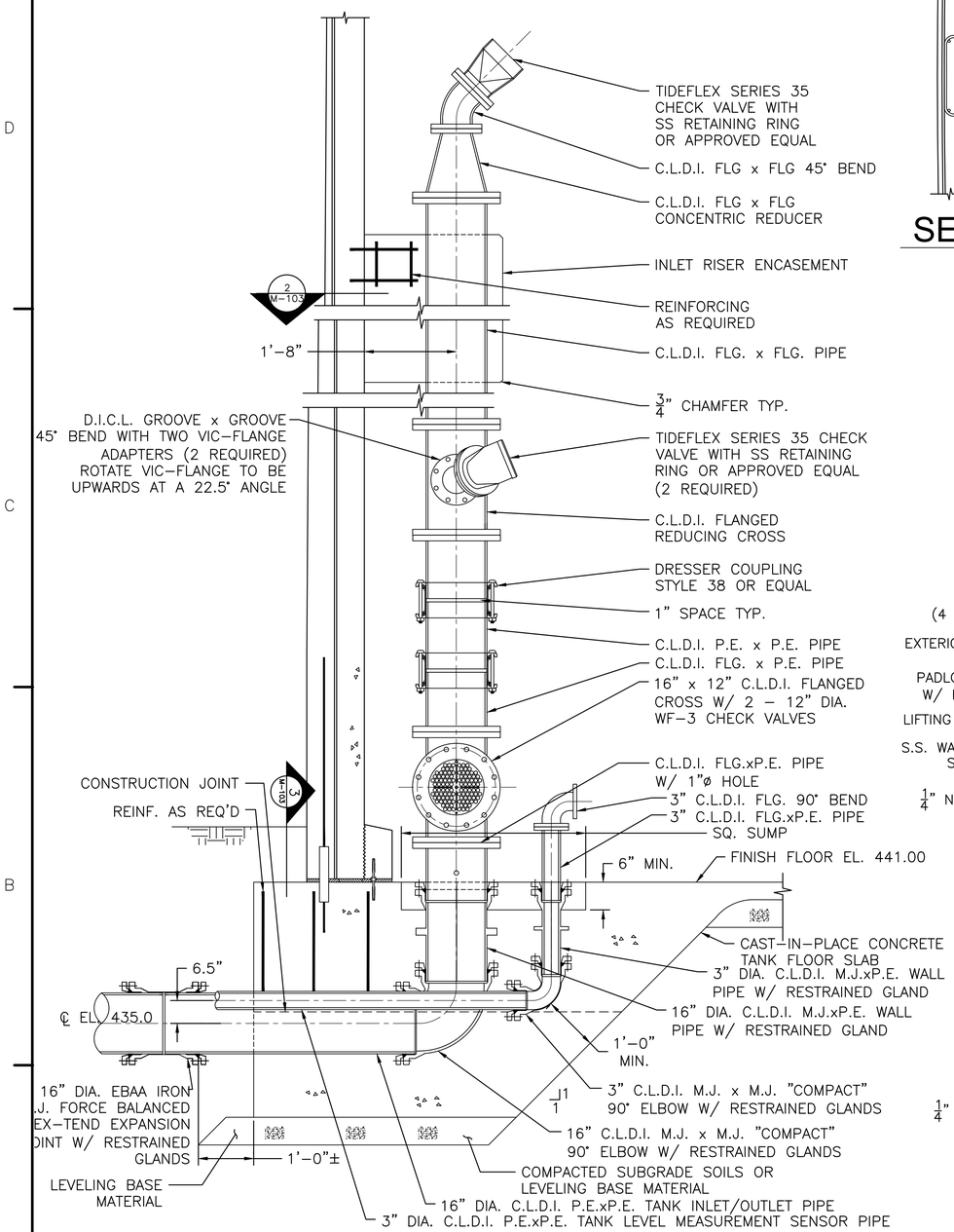

NOTE:
1. DESIGN, SIZING, AND SPACING OF MIXING SYSTEM VALVES SHALL BE PERFORMED BY TIDEFLEX TECHNOLOGIES.
2. MANIFOLD SIZE AS REQUIRED BY TIDEFLEX TECHNOLOGIES.

INLET / OUTLET MIXING SYSTEM

NTS

1 / M-103

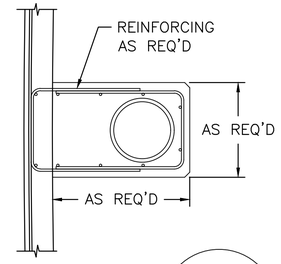

SECTION 2 / M-103

NTS

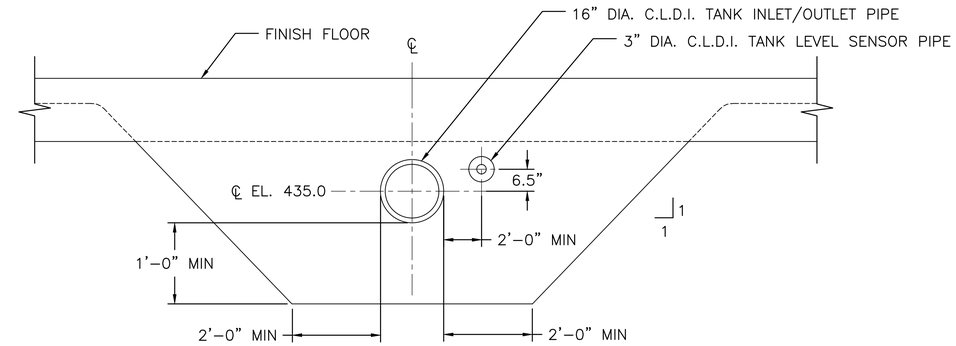

SECTION 3 / M-103

NTS

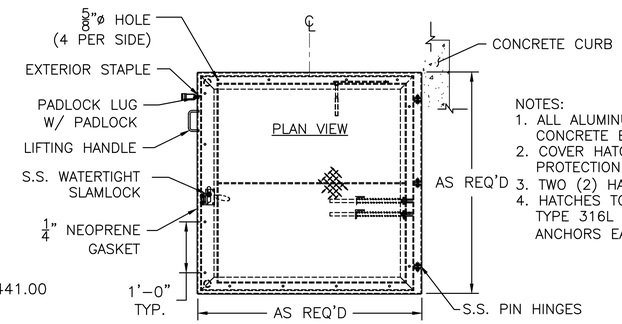

NOTES:
1. ALL ALUMINUM SHALL BE ISOLATED FROM CONCRETE BY A NEOPRENE GASKET.
2. COVER HATCH WITH POLYETHYLENE FOR PROTECTION DURING CONSTRUCTION.
3. TWO (2) HATCHES REQUIRED.
4. HATCHES TO BE SECURED TO CURB WITH TYPE 316L STAINLESS STEEL EPOXY ANCHORS EACH SIDE (16 REQUIRED).

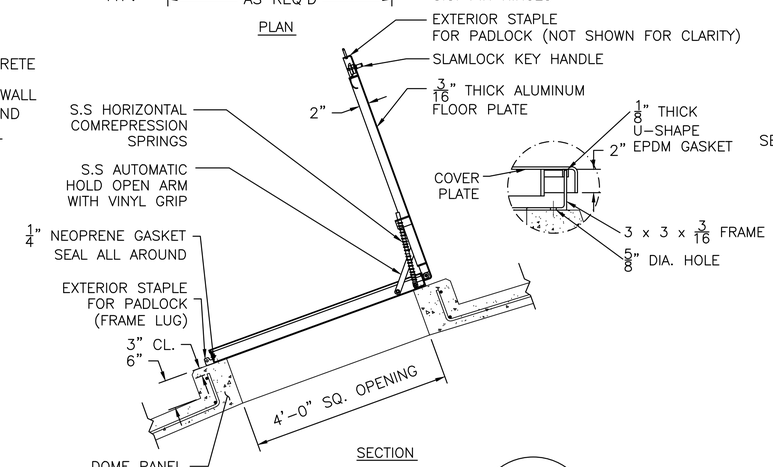

DOME HATCH

NTS

4 / M-103

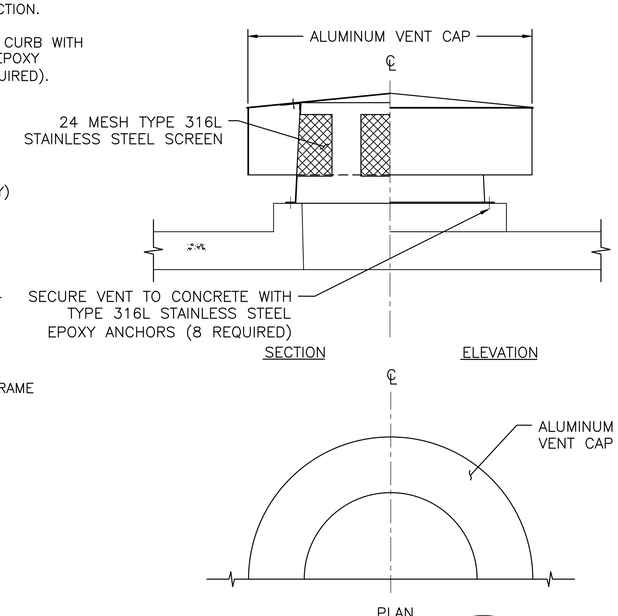

VENT

NTS

5 / M-103

MARK	DATE	MADE BY	CHECKED	DESCRIPTION

REVISIONS

100% SUBMITTAL

AECOM

AECOM, INC.
250 APPROACH DRIVE
ROCKY HILL, CT 06067
PHONE (860) 263-3800

EPA CONTRACT NO. EP-S1-06-01
DURHAM MEADOWS WATERLINE RD
DURHAM AND MIDDLETOWN, CONNECTICUT
TASK ORDER NO. 0060-RD-RD-0105

CITY OF MIDDLETOWN
TANK DETAILS II

MECHANICAL

PROJECT NO:	60275749
CAD DWG FILE:	M-101-6
DESIGNED BY:	ASM
DRAWN BY:	ASM
DEPT CHECK:	GRS
PROJ CHECK:	MWM
DATE:	APRIL 2018
SCALE:	AS NOTED

M-103

ANSI D – 30-Mar-18

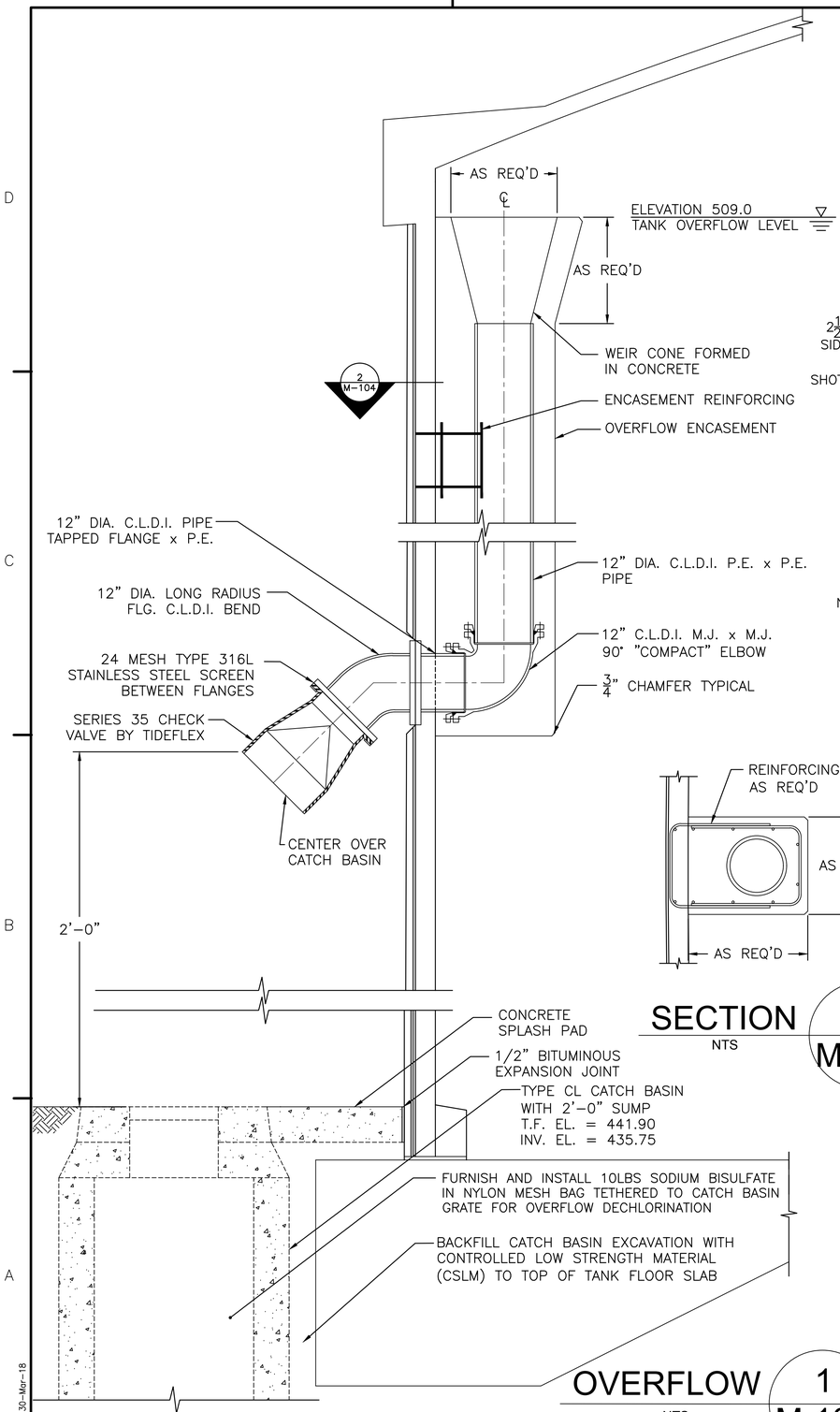

OVERFLOW 1 / M-104
NTS

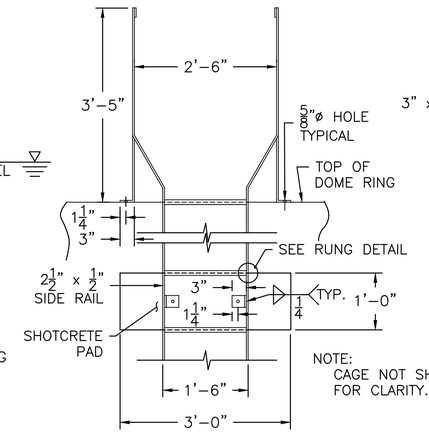

ELEVATION

NOTE:
CAGE NOT SHOWN FOR CLARITY.

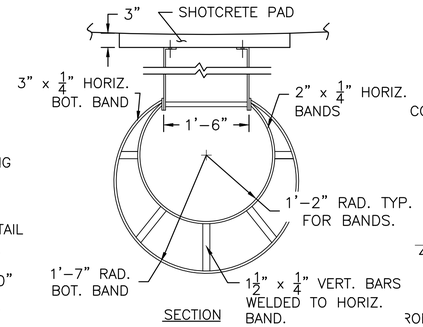

SECTION

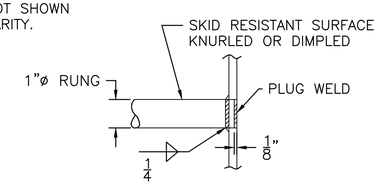

RUNG DETAIL

NOTES:
1. LADDER SHALL BE 6061-T6 ALUMINUM.
2. ALL ALUMINUM SURFACES IN CONTACT WITH CONCRETE SHALL RECEIVE A PVC SHIM.
3. LADDERS SHALL BE CONNECTED TO TANK USING TYPE 316L STAINLESS STEEL EPOXY ANCHORS.
4. BASE OF LADDER SHALL BE EQUIPPED WITH ANTI-CLIMB PLATE.
5. LADDER TO BE TERMINATED 8'-0" ABOVE GRADE.

EXTERIOR LADDER 3 / M-104
NTS

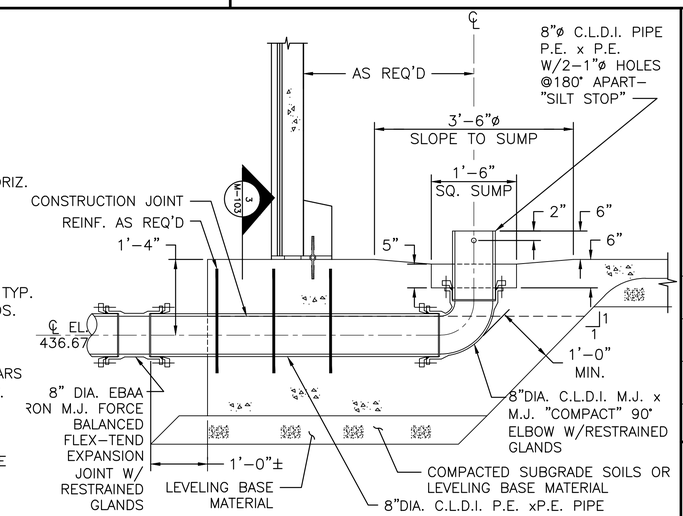

8" DIA. TANK DRAIN 4 / M-104
NTS

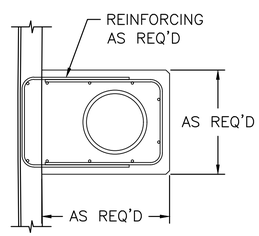

SECTION 2 / M-104
NTS

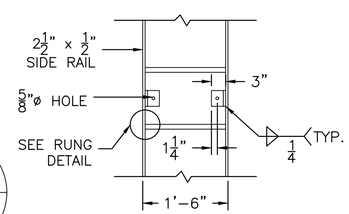

ELEVATION

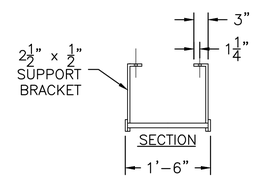

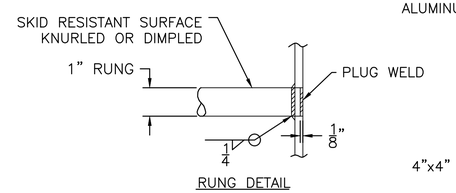

RUNG DETAIL

NOTES:
1. LADDER SHALL BE TYPE 316 STAINLESS STEEL.
2. ALL STAINLESS STEEL SURFACES IN CONTACT WITH CONCRETE SHALL RECEIVE A PVC SHIM.
3. LADDERS SHALL BE CONNECTED TO TANK USING STAINLESS STEEL WEDGE ANCHORS.

MANWAY LADDER 5 / M-104
NTS

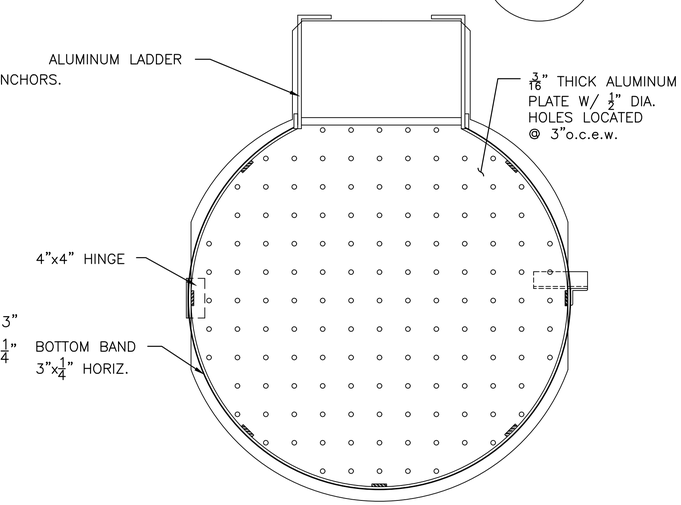

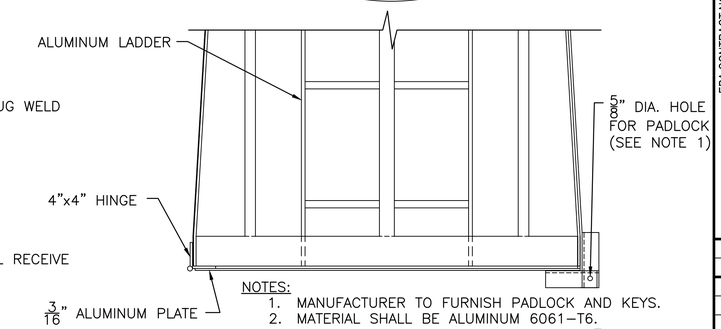

NOTES:
1. MANUFACTURER TO FURNISH PADLOCK AND KEYS.
2. MATERIAL SHALL BE ALUMINUM 6061-T6.

ANTI-CLIMB PLATE 6 / M-104
NTS

MARK	DATE	MADE BY	CHECKED	DESCRIPTION

REVISIONS

100% SUBMITTAL

AECOM
AECOM, INC.
250 APPLEWOOD DRIVE
ROCKY HILL, CT 06067
PHONE (860) 263-3800

EPA CONTRACT NO. EP-S1-06-01
DURHAM MEADOWS WATERLINE RD
DURHAM AND MIDDLETOWN, CONNECTICUT
TASK ORDER NO. 0060-RD-RD-0105

CITY OF MIDDLETOWN
TANK DETAILS III
MECHANICAL

PROJECT NO:	60275749
CAD DWG FILE:	M-101-6
DESIGNED BY:	ASM
DRAWN BY:	ASM
DEPT CHECK:	GRS
PROJ CHECK:	MWM
DATE:	APRIL 2018
SCALE:	AS NOTED

M-104

ANSI D - 30-Mar-18

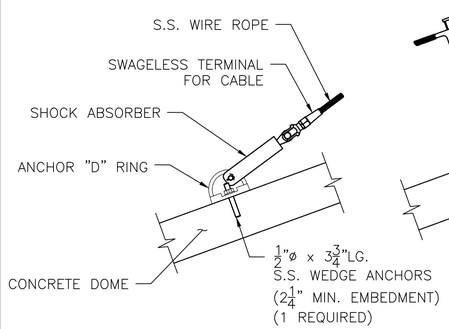

SECTION AT ANCHOR END

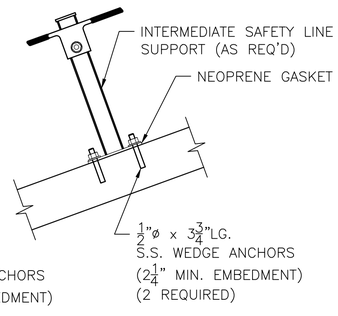

SECTION AT INTERMEDIATE SUPPORT

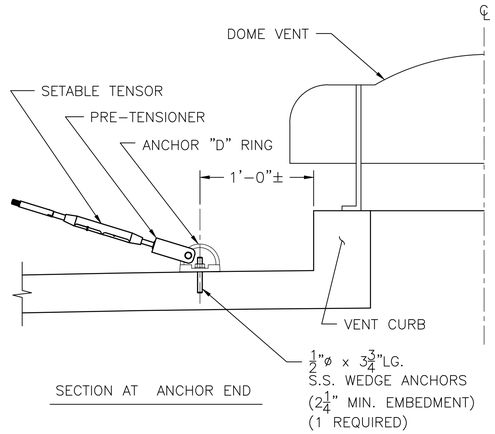

SECTION AT ANCHOR END

NOTE:
1. INSTALL SAFETY RUNNERS ON CABLE AS REQUIRED BY DESIGN.
2. TWO (2) REQUIRED.

DOME SAFETY LINE 1 / M-105

NTS

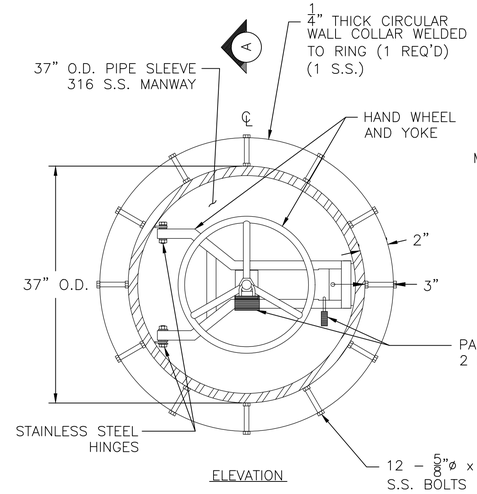

ELEVATION

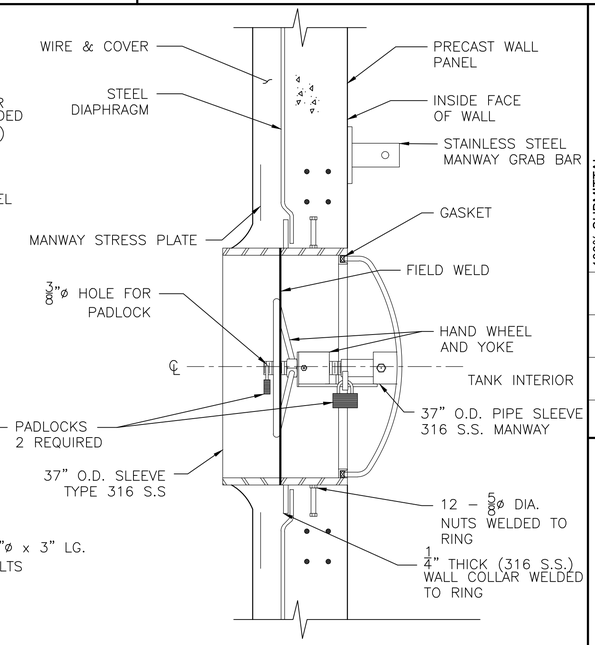

SECTION A

NOTES:
1. TWO (2) WALL MANWAYS REQUIRED.
2. MANWAY TO BE LOCATED IN THE MIDDLE OF TYPE "A" WALL PANEL.

WALL MANWAY 2 / M-105

NTS

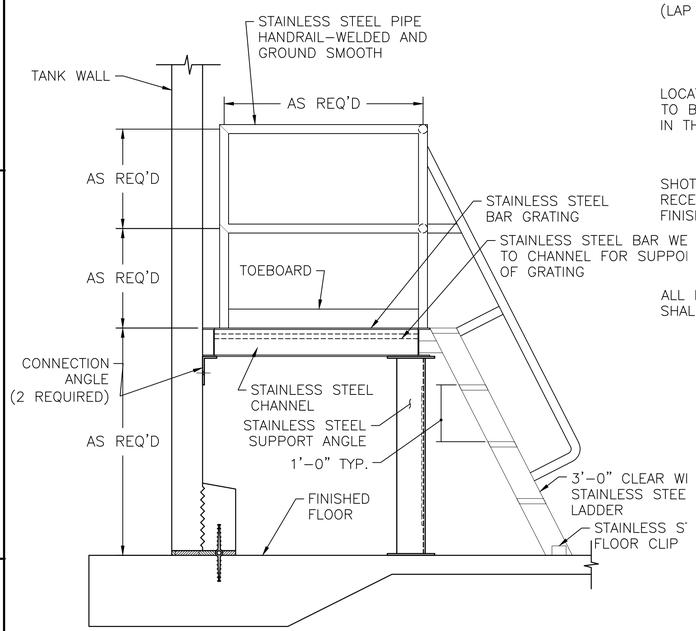

NOTES:
1. ALL MATERIAL SHALL BE TYPE 316 STAINLESS STEEL.
2. PLATFORM SHALL BE SECURED TO TANK WALL USING EPCON C6 EPOXY EPOXY ANCHORING SYSTEM. THREADED ROD TO BE STAINLESS STEEL W/ WASHERS & ELASTIC STOP NUTS.
3. SUPPORT ANGLE BASE PLATE SHALL BE SECURED TO TANK FLOOR USING STAINLESS STEEL WEDGE ANCHORS.
4. PLATFORM SHALL BE SECURED TO SUPPORT ANGLE USING FULLY THREADED CAP SCREWS WITH WASHERS AND ELASTIC STOP NUTS.
5. GRIND SMOOTH ALL EDGES.
6. LANDING AND SHIPS LADDER TO COMPLY WITH OSHA REQUIREMENTS.
7. TWO (2) INTERIOR LANDINGS REQUIRED.

INTERIOR LANDING 3 / M-105

NTS

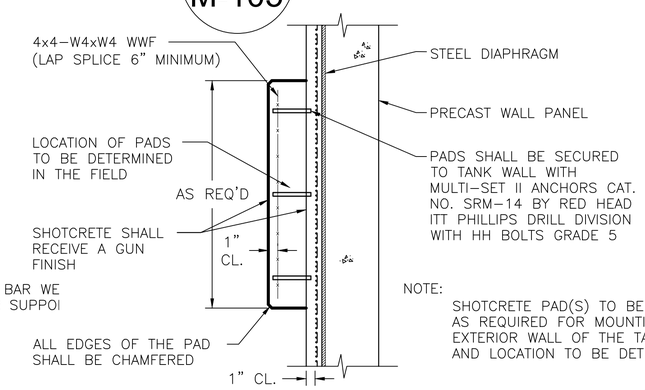

NOTE:
SHOTCRETE PAD(S) TO BE PROVIDED AS REQUIRED FOR MOUNTING TO THE EXTERIOR WALL OF THE TANK. SIZE AND LOCATION TO BE DETERMINED.

SHOTCRETE ANTENNA PAD 4 / M-105

NTS

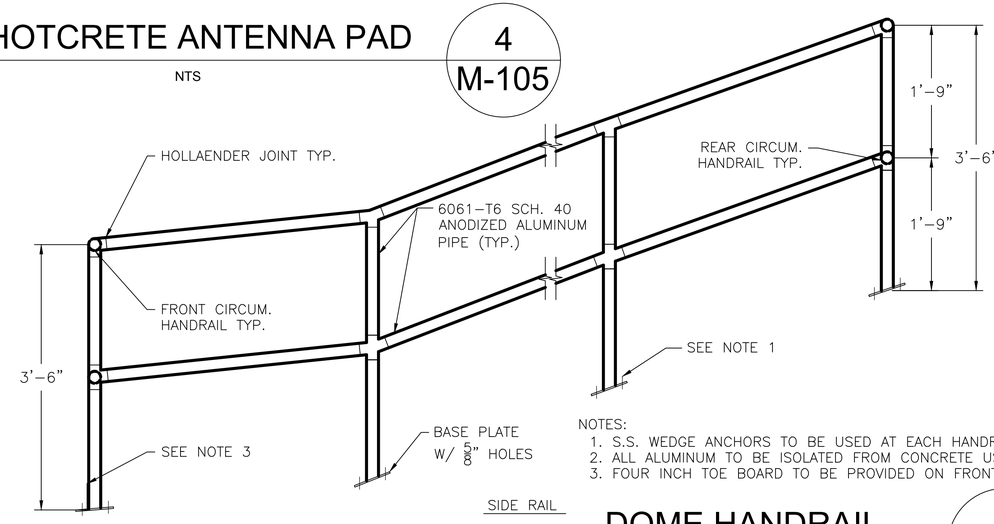

SIDE RAIL

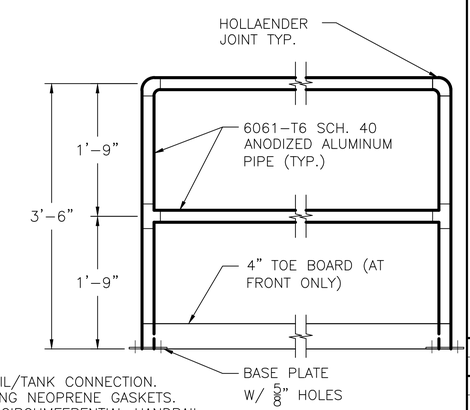

FRONT AND REAR RAIL

NOTES:
1. S.S. WEDGE ANCHORS TO BE USED AT EACH HANDRAIL/TANK CONNECTION.
2. ALL ALUMINUM TO BE ISOLATED FROM CONCRETE USING NEOPRENE GASKETS.
3. FOUR INCH TOE BOARD TO BE PROVIDED ON FRONT CIRCUMFERENTIAL HANDRAIL.

DOME HANDRAIL 5 / M-105

NTS

MARK	DATE	MADE BY	CHECKED	DESCRIPTION
				100% SUBMITTAL

REVISIONS

AECOM, INC.
500 ENTERPRISE DRIVE
ROCKY HILL, CT 06067
PHONE (860) 263-3800

EPA CONTRACT NO. EP-S1-06-01
DURHAM MEADOWS WATERLINE RD
DURHAM AND MIDDLETOWN, CONNECTICUT
TASK ORDER NO. 0060-RD-RD-0105

CITY OF MIDDLETOWN
TANK DETAILS IV
MECHANICAL

PROJECT NO:	60275749
CAD DWG FILE:	M-101-6
DESIGNED BY:	ASM
DRAWN BY:	ASM
DEPT CHECK:	GRS
PROJ CHECK:	MWM
DATE:	APRIL 2018
SCALE:	AS NOTED

M-105

ANSI D - 30-Mar-18

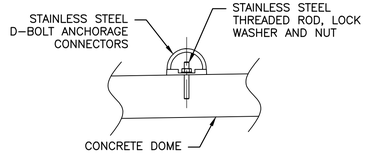

D-BOLT ANCHORAGE

NTS

1 / M-106

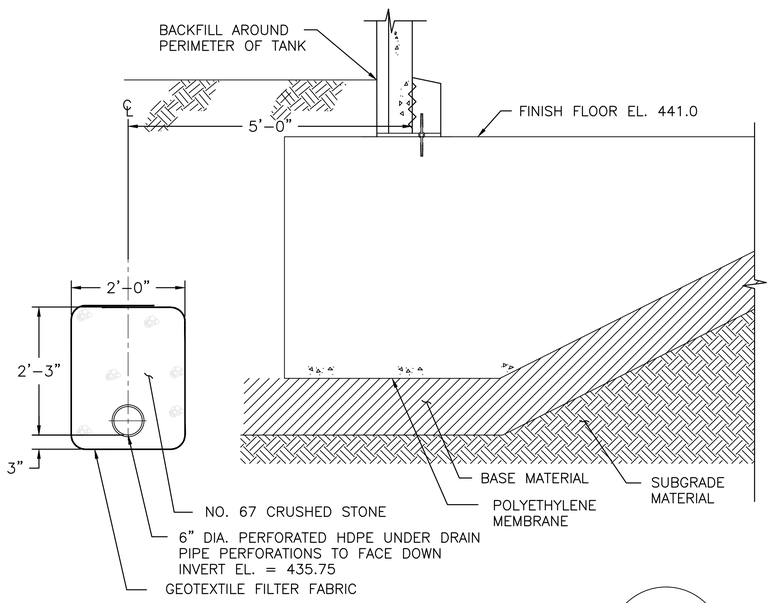

PERIMETER DRAIN

NTS

2 / M-106

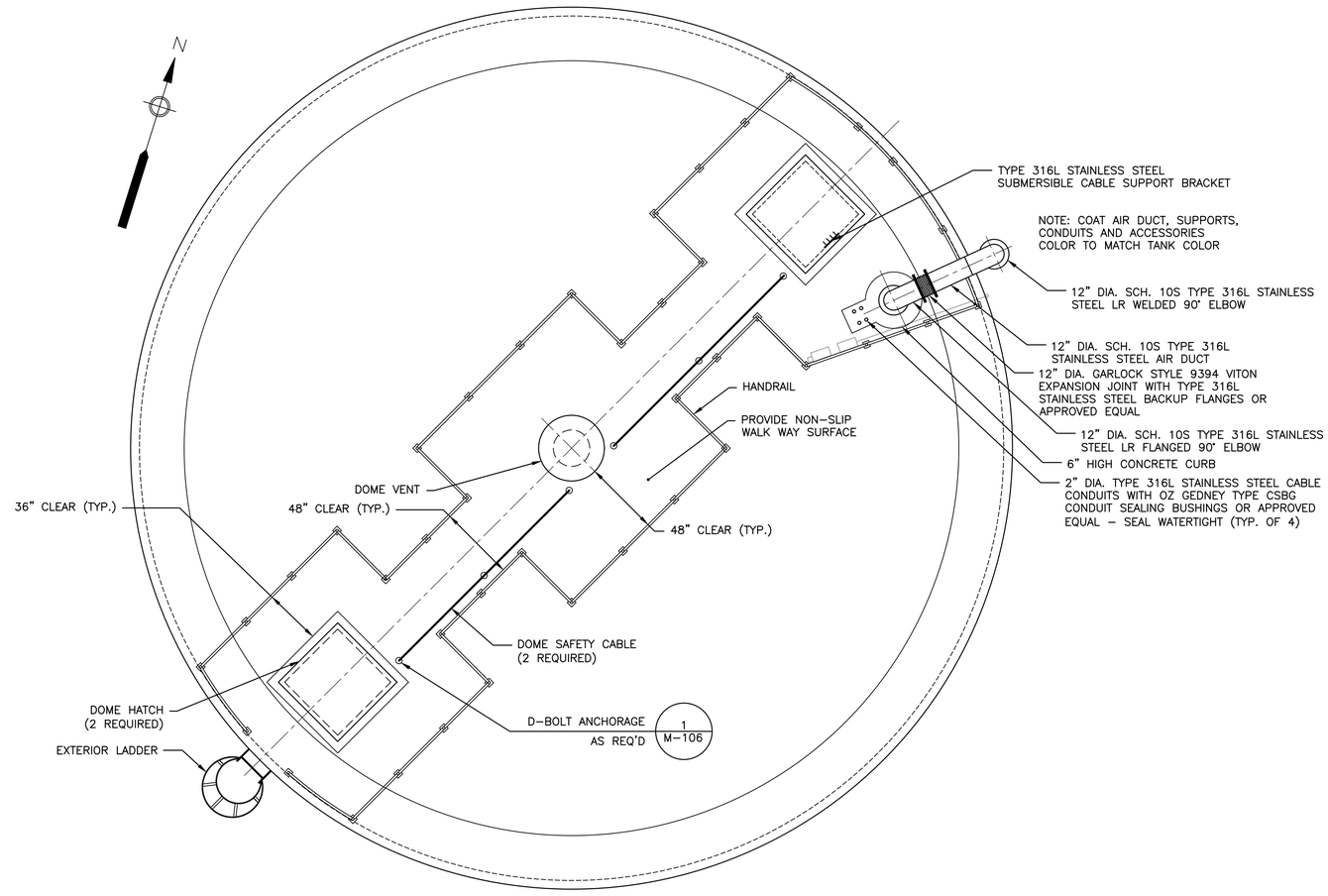

ROOF RAILING AND AIR DUCT LAYOUT

SCALE: 1/4" = 1'-0"

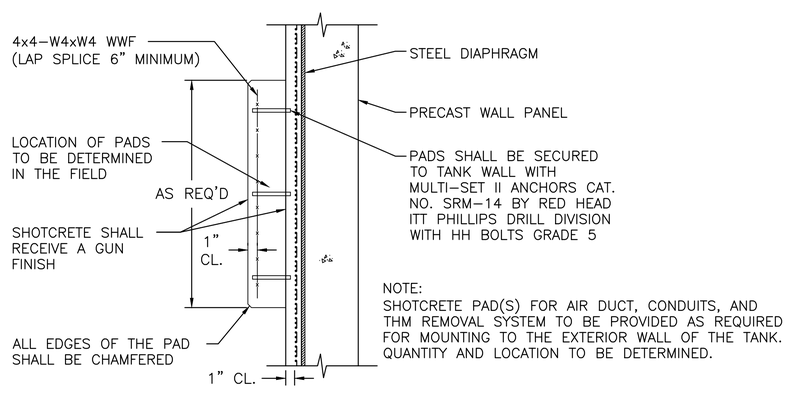

NOTE:
SHOTCRETE PAD(S) FOR AIR DUCT, CONDUITS, AND THM REMOVAL SYSTEM TO BE PROVIDED AS REQUIRED FOR MOUNTING TO THE EXTERIOR WALL OF THE TANK. QUANTITY AND LOCATION TO BE DETERMINED.

SHOTCRETE PAD

NTS

3 / M-106

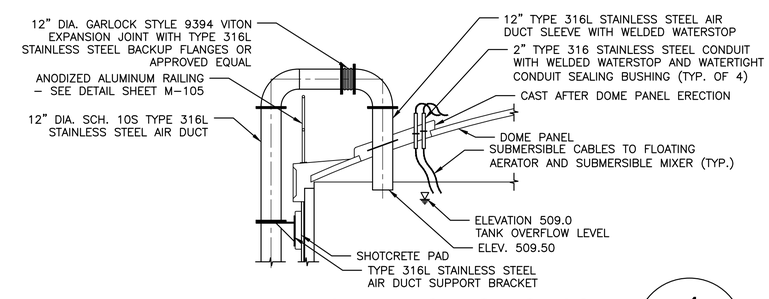

AIR DUCT SECTION

NOT TO SCALE

4 / M-106

MARK	DATE	MADE BY	CHECKED	DESCRIPTION
				100% SUBMITTAL

REVISIONS

AECOM, INC.
250 APPROACH DRIVE
ROCKY HILL, CT 06067
PHONE (860) 263-3800

EPA CONTRACT NO. EP-S1-06-01
DURHAM MEADOWS WATERLINE RD
DURHAM AND MIDDLETOWN, CONNECTICUT
TASK ORDER NO. 0060-RD-RD-0105

CITY OF MIDDLETOWN
TANK DETAILS V
MECHANICAL

PROJECT NO:	60275749
CAD DWG FILE:	M–101–6
DESIGNED BY:	ASM
DRAWN BY:	ASM
DEPT CHECK:	GRS
PROJ CHECK:	MWM
DATE:	APRIL 2018
SCALE:	AS NOTED

M-106

ANSI D – 30–Mar–18

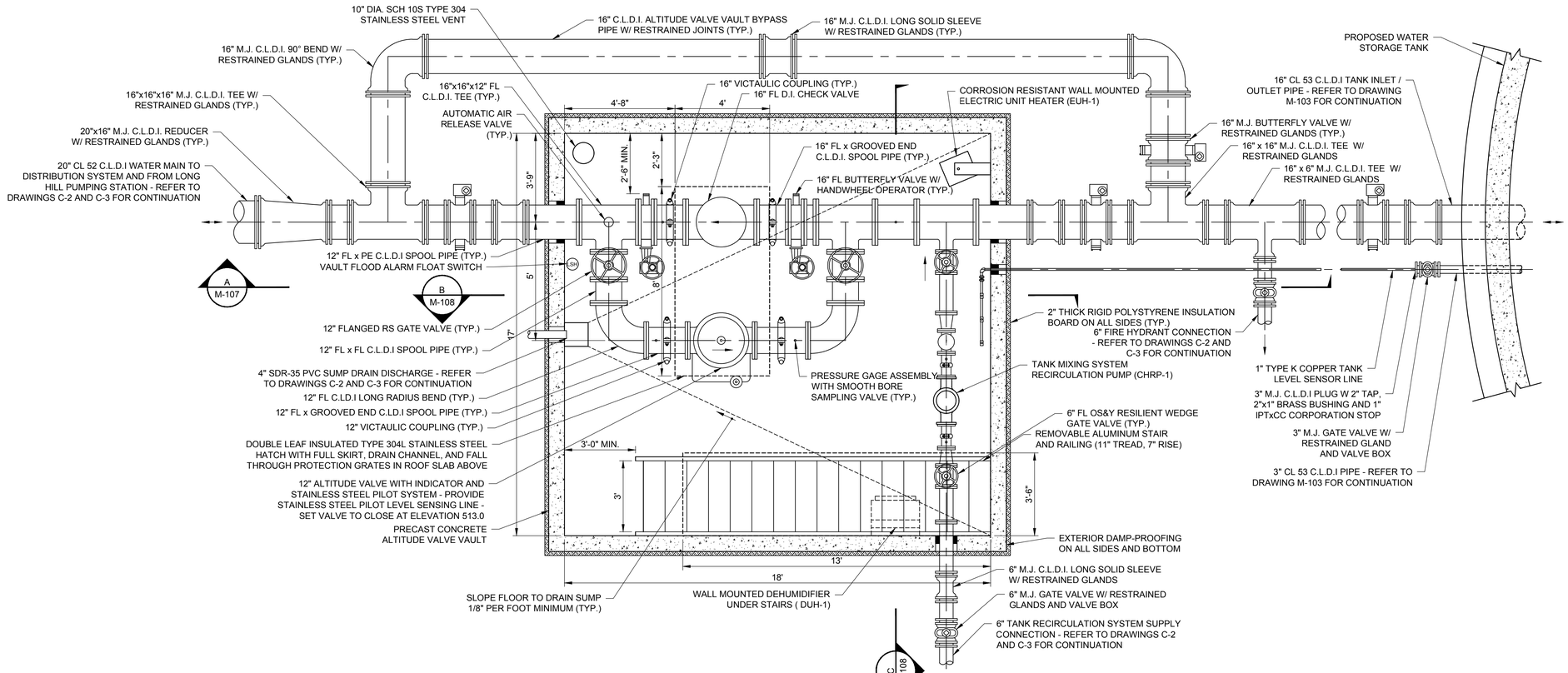

PLAN

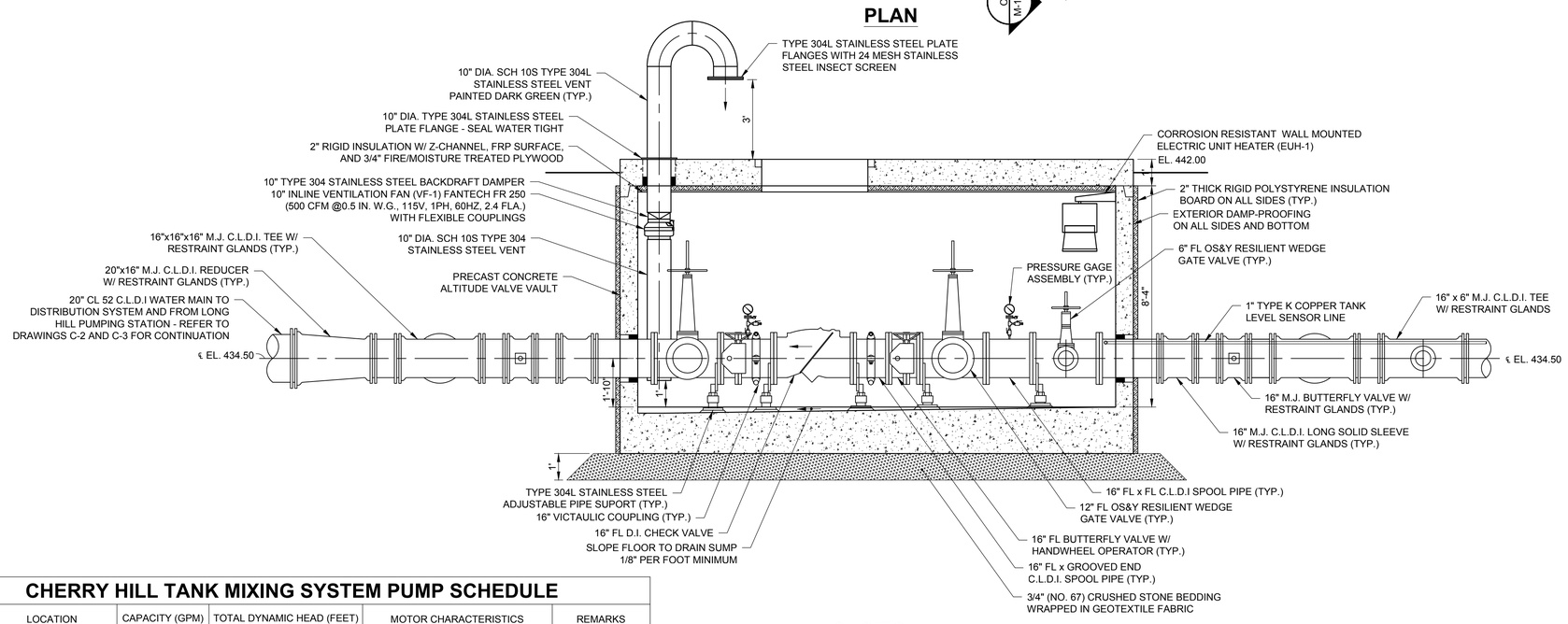

SECTION A - A

CHERRY HILL TANK MIXING SYSTEM PUMP SCHEDULE

TAG NO.	LOCATION	CAPACITY (GPM)	TOTAL DYNAMIC HEAD (FEET)	MOTOR CHARACTERISTICS	REMARKS
CHRP-1	ALTITUDE VALVE VAULT	200	5	1 PH, 240 V, 60 HZ, TEFC	SEE NOTES

NOTES:

1. REFER TO DRAWING M-108 FOR SECTIONS B-B AND C-C.
2. REFER TO DRAWINGS C-2 AND C-3 FOR SITE WORK.
3. REFER TO DRAWINGS DI-2, DI-3, AND DI-4 FOR INSTRUMENTATION WORK.
4. REFER TO DRAWINGS E-3, E-4, E-5, AND E-8 FOR ELECTRICAL WORK.
5. REFER TO DRAWING M-501 FOR MECHANICAL EQUIPMENT SCHEDULES AND DETAILS.
6. PROVIDE TYPE 304L STAINLESS STEEL VENTILATION DUCT SUPPORTS.
7. PIPE HATCH CHANNEL DRAIN TO SUMP WITH SCH. 80 PVC PIPE AND FITTINGS

100% SUBMITTAL

MARK	DATE	MADE BY	CHECKED	DESCRIPTION

REVISIONS

AECOM, INC.
500 ENTERPRISE DRIVE
ROCKY HILL, CT 06067
PHONE (860) 263-3800

EPA CONTRACT NO. EP-S1-06-01
DURHAM MEADOWS WATERLINE RD
DURHAM AND MIDDLETOWN, CONNECTICUT
TASK ORDER NO. 0060-RD-RD-01D5

CITY OF MIDDLETOWN
ALTITUDE VALVE VAULT PLAN AND SECTION

MECHANICAL

PROJECT NO:	60275749
CAD DWG FILE:	M-107-501
DESIGNED BY:	ASM
DRAWN BY:	ASM
DEPT CHECK:	GRS
PROJ CHECK:	MWM
DATE:	APRIL 2018
SCALE:	AS NOTED

M-107

ANSI D – 9-Apr-18

SCALE: 3/8" = 1'-0"

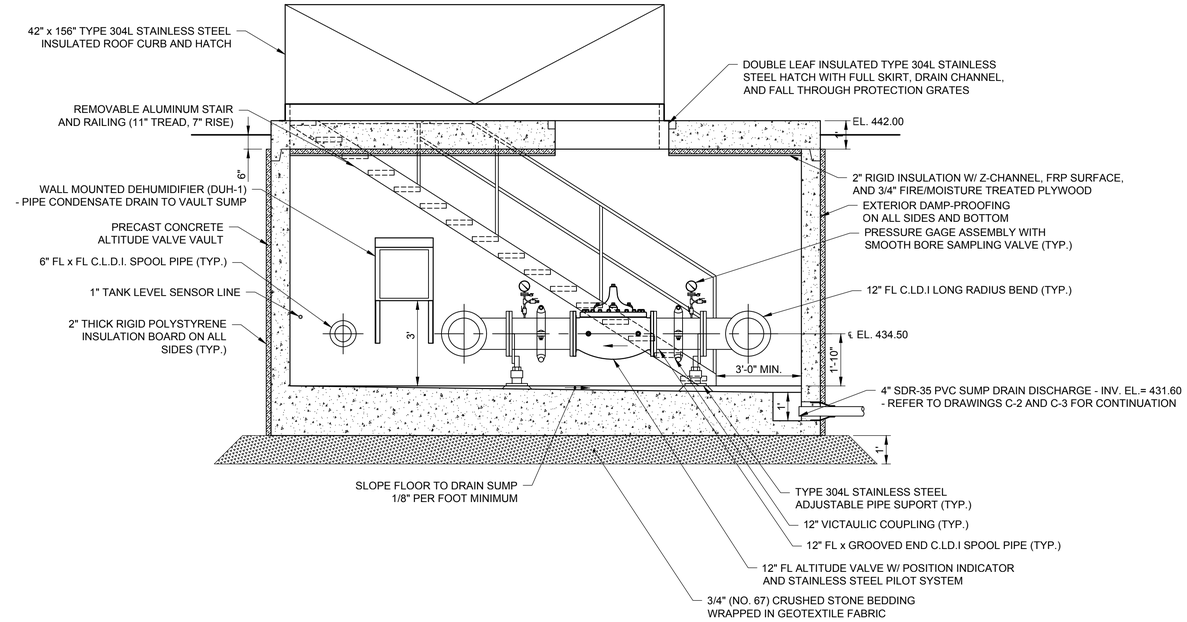

SECTION B - B

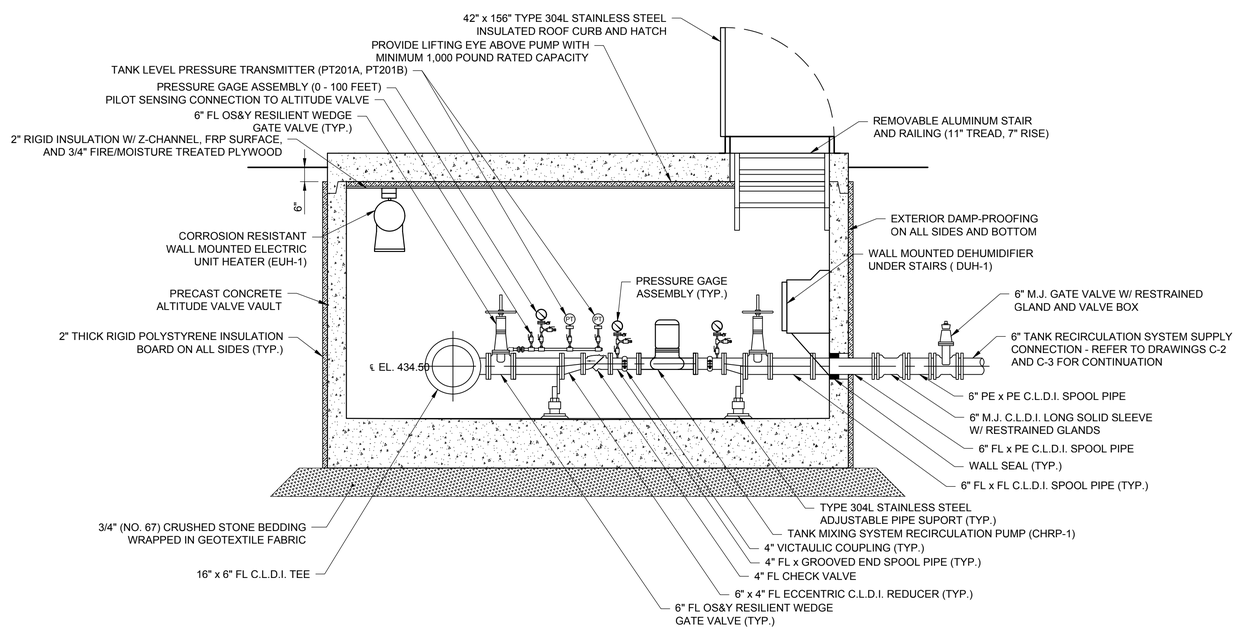

SECTION C - C

NOTES:
1. REFER TO DRAWING M-107 FOR PLAN AND SECTION A-A.
2. REFER TO DRAWINGS C-2 AND C-3 FOR SITE WORK.
3. REFER TO DRAWINGS DI-2, DI-3, AND DI-4 FOR INSTRUMENTATION WORK.
4. REFER TO DRAWINGS E-3, E-4, E-5, AND E-8 FOR ELECTRICAL WORK.
5. REFER TO DRAWING M-501 FOR MECHANICAL EQUIPMENT SCHEDULES AND DETAILS.
6. PROVIDE TYPE 304L STAINLESS STEEL VENTILATION DUCT SUPPORTS.
7. PIPE HATCH CHANNEL DRAIN TO SUMP WITH SCH. 80 PVC PIPE AND FITTINGS

100% SUBMITTAL

MARK	DATE	MADE BY	CHECKED	DESCRIPTION

REVISIONS

AECOM, INC.
250 APPROACH DRIVE
ROCKY HILL, CT 06067
PHONE (860) 263-3800

EPA CONTRACT NO. EP-S1-06-01
DURHAM MEADOWS WATERLINE RD
DURHAM AND MIDDLETOWN, CONNECTICUT
TASK ORDER NO. 0060-RD-RD-01D5

CITY OF MIDDLETOWN
ALTITUDE VALVE VAULT SECTIONS
MECHANICAL

PROJECT NO:	60275749
CAD DWG FILE:	M-107-501
DESIGNED BY:	ASM
DRAWN BY:	ASM
DEPT CHECK:	GRS
PROJ CHECK:	MWM
DATE:	APRIL 2018
SCALE:	AS NOTED

M-108

ANSI D – 9-Apr-18

SCALE: 3/8" = 1'-0"

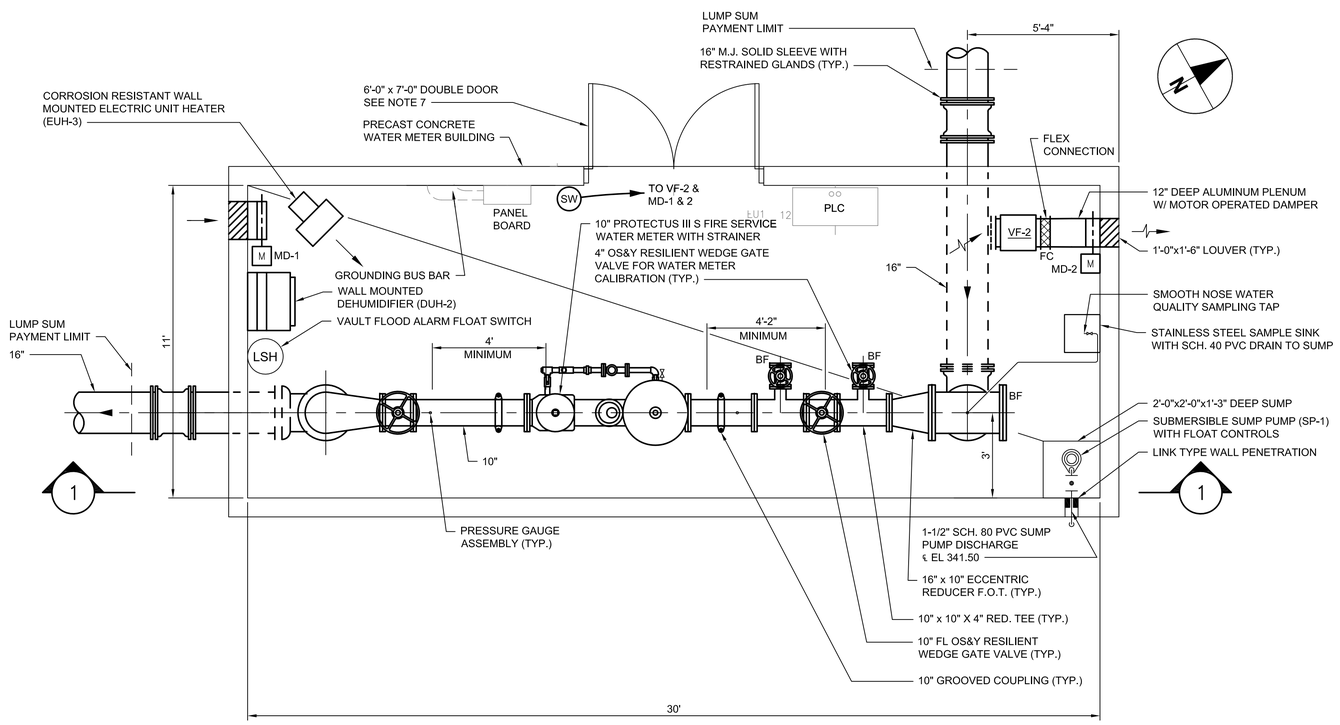

PLAN

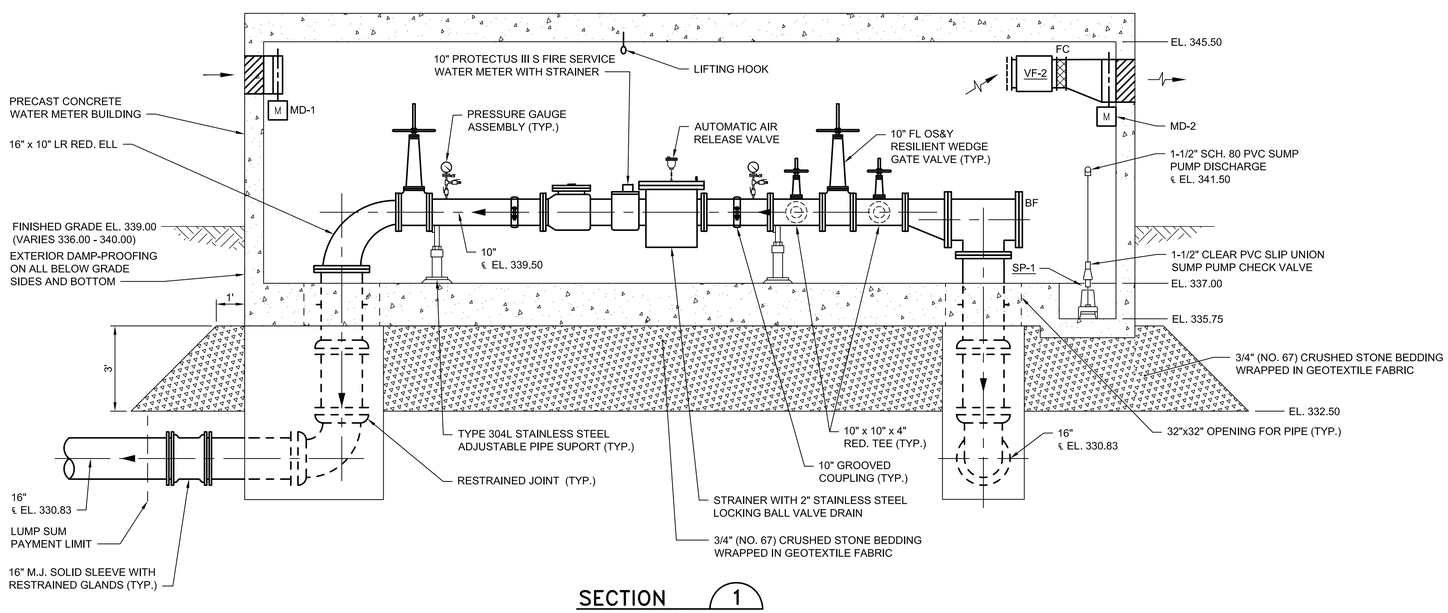

SECTION 1

SCALE: 3/8"=1'-0"

SUBMERSIBLE SUMP PUMP (SP-1) CHARACTERISTICS
ELECTRICAL: 115V, 1 PH, 60 HZ, 0.3 HP, FLA.=9.7 A
PERFORMANCE REQUIREMENTS: 34 GPM @ 10' TDH
PUMP ON AT 9.25" AND PUMP OFF AT 5" ABOVE SUMP BOTTOM
DESIGN BASIS: ZOELLER PUMP MODEL M57
PROVIDE 2" HIGH PUMP STAND OPTION

NOTES:
1. REFER TO DRAWING C-11 FOR SITE WORK.
2. REFER TO DRAWING DI-6 FOR INSTRUMENTATION WORK.
3. REFER TO DRAWING E-6 FOR ELECTRICAL WORK.
4. REFER TO DRAWING M-501 FOR MECHANICAL EQUIPMENT SCHEDULES AND DETAILS.
5. PROVIDE TYPE 304L STAINLESS STEEL VENTILATION DUCT SUPPORTS.
6. REFER TO S-001 AND A-501 FOR ADDITIONAL BUILDING DETAILS.
7. MATCH CITY OF MIDDLETOWN KEY SYSTEM FOR ALL DOORS AND GATES.

AS NOTED

MARK	DATE	MADE BY	CHECKED	DESCRIPTION

REVISIONS

AECOM, INC.
250 APPROACH DRIVE
ROCKY HILL, CT 06067
PHONE (860) 263-3800

EPA CONTRACT NO. EP-S1-06-01
DURHAM MEADOWS WATERLINE RD
DURHAM AND MIDDLETOWN, CONNECTICUT
TASK ORDER NO. 0060-RD-RD-01D5

CITY OF MIDDLETOWN
WATER METER BUILDING PLAN AND SECTION
MECHANICAL

PROJECT NO:	60275749
CAD DWG FILE:	M-109
DESIGNED BY:	ASM
DRAWN BY:	ASM
DEPT CHECK:	GRS
PROJ CHECK:	MWM
DATE:	APRIL 2018
SCALE:	AS NOTED

M-109

P: 60275749-DUR\D
ANSI B - 6-Apr-18

SCALE: 3/8" = 1'-0"

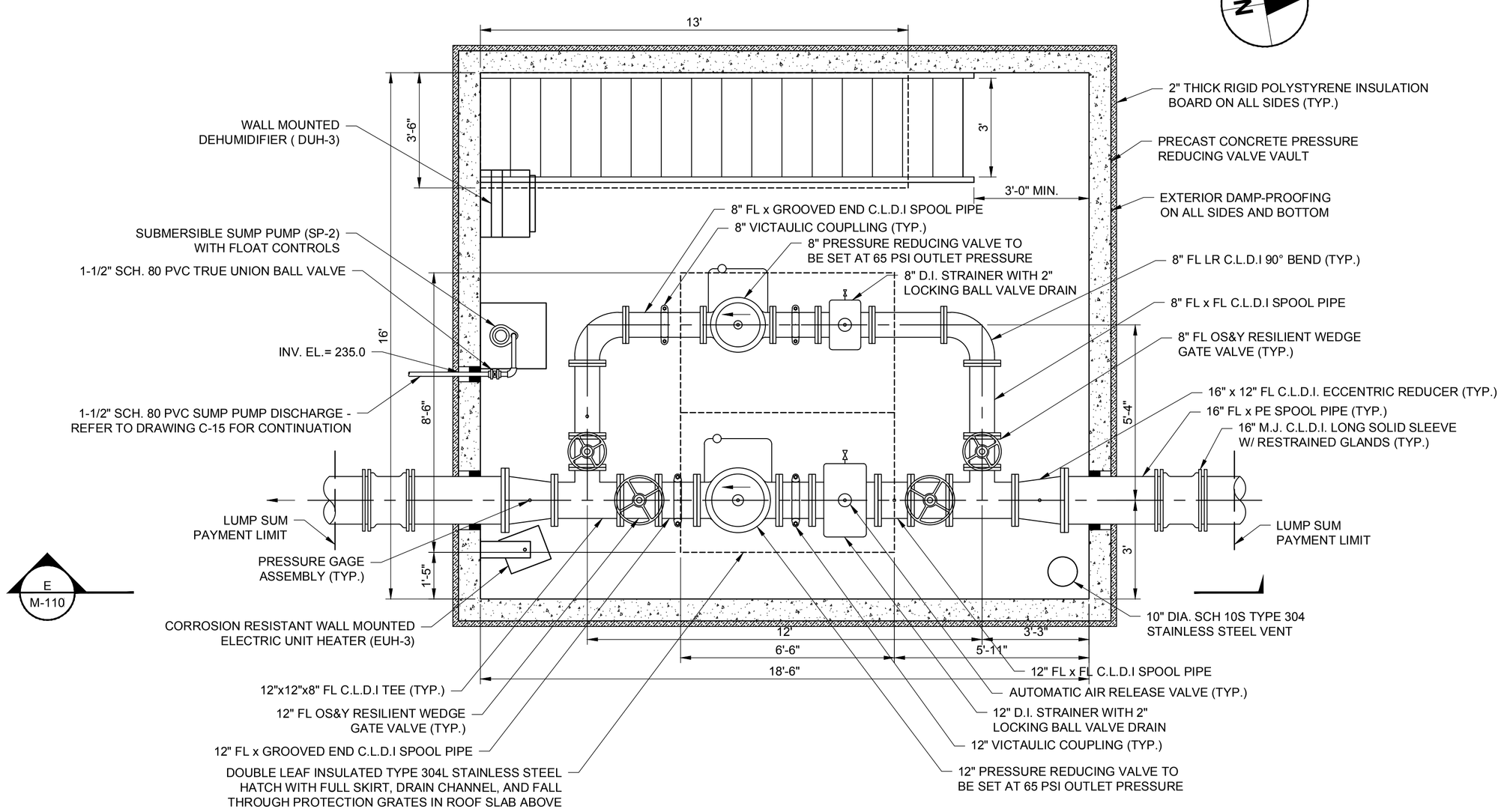

PLAN

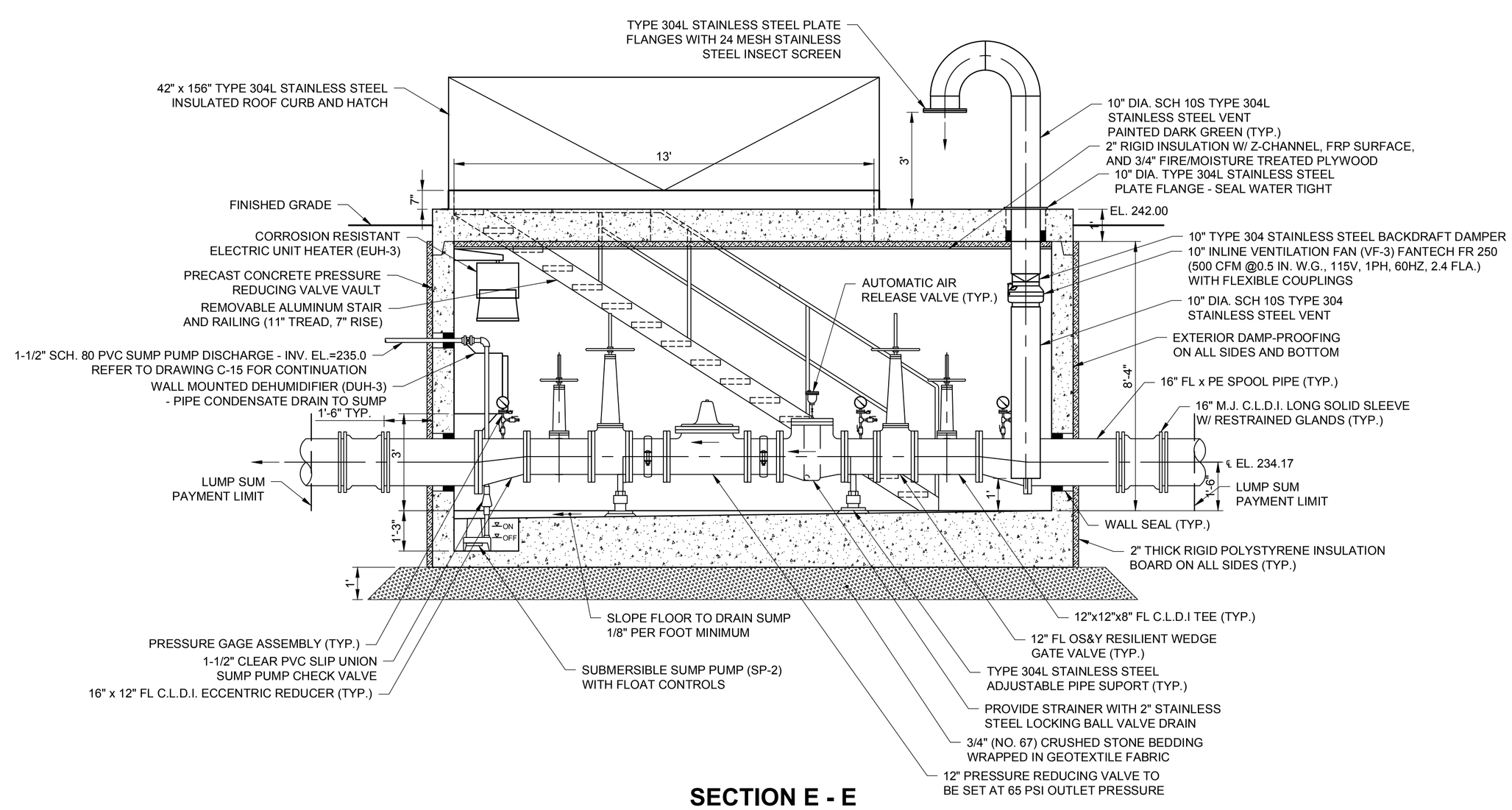

SECTION E - E

SUBMERSIBLE SUMP PUMP (SP-2) CHARACTERISTICS
ELECTRICAL: 115V, 1 PH, 60 HZ, 0.3 HP, FLA.=9.7 A
PERFORMANCE REQUIREMENTS: 34 GPM @ 10' TDH
PUMP ON AT 9.25" AND PUMP OFF AT 5" ABOVE SUMP BOTTOM
DESIGN BASIS: ZOELLER PUMP MODEL M57
PROVIDE 2" HIGH PUMP STAND OPTION

NOTES:
1. REFER TO DRAWING C-15 FOR SITE WORK.
2. REFER TO DRAWING DI-7 FOR INSTRUMENTATION WORK.
3. REFER TO DRAWINGS E-7 AND E-8 FOR ELECTRICAL WORK.
4. REFER TO DRAWING M-501 FOR MECHANICAL EQUIPMENT SCHEDULES AND DETAILS.
5. PROVIDE TYPE 304L STAINLESS STEEL VENTILATION DUCT SUPPORTS.
6. PIPE HATCH CHANNEL DRAIN TO SUMP WITH SCH. 80 PVC PIPE AND FITTINGS

MARK	DATE	MADE BY	CHECKED	DESCRIPTION

REVISIONS

100% SUBMITTAL

AECOM, INC.
250 APPLEWOOD DRIVE
ROCKY HILL, CT 06067
PHONE (860) 263-3800

EPA CONTRACT NO. EP-S1-06-01
DURHAM MEADOWS WATERLINE RD
DURHAM AND MIDDLETOWN, CONNECTICUT
TASK ORDER NO. 0060-RD-RD-01D5

TOWN OF DURHAM
PRESSURE REDUCING VALVE VAULT
MECHANICAL

PROJECT NO:	60275749
CAD DWG FILE:	M-107-501
DESIGNED BY:	ASM
DRAWN BY:	ASM
DEPT CHECK:	GRS
PROJ CHECK:	MWM
DATE:	APRIL 2018
SCALE:	AS NOTED

M-110

ANSI D – 9-Apr-18

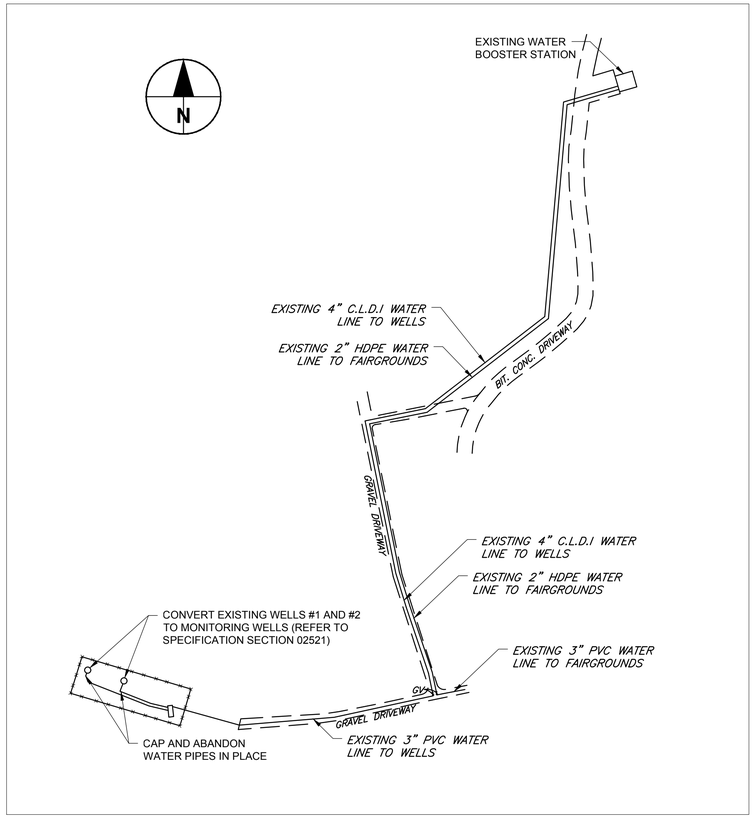

FAIRGROUNDS WELL ABANDONMENT SITE PLAN

NOT TO SCALE

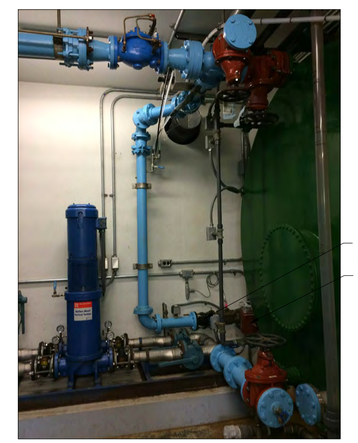

EXISTING WATER BOOSTER STATION PROCESS PIPING MODIFICATIONS

NOTES:

1. CONTRACTOR SHALL LOCK OUT AND TAG OUT THE POWER FEEDER CIRCUIT BREAKERS TO:
   a. WELL PUMP #1
   b. WELL PUMP #2
   c. BOOSTER PUMP #1
   d. BOOSTER PUMP #2
   e. AIR COMPRESSOR
2. CONTRACTOR SHALL DISCONNECT AND MAKE SAFE POWER AND CONTROL WIRING FOR BOTH WELL PUMPS.
3. CONTRACTOR SHALL DISCONNECT AND MAKE SAFE POWER AND CONTROL WIRING FOR BOTH BOOSTER PUMPS.
4. CONTRACTOR SHALL DRAIN ATMOSPHERIC TANK, BOTH HYDROPNEUMATIC TANKS, AND ALL UNUSED PIPING.
5. CONTRACTOR SHALL REMOVE WELL PUMPS #1 AND #2 AND DELIVER TO OWNER.
6. CONTRACTOR SHALL REMOVE AND DISPOSE OF WELL PIPING CONVERT WELL NUMBER 1 AND 2 TO MONITORING WELLS. REFER TO SPECIFICATION SECTION 02521.

MARK	DATE	MADE BY	CHECKED	DESCRIPTION
				100% SUBMITTAL

REVISIONS

AECOM
AECOM, INC.
50 LA PLATNEY DRIVE
ROCKY HILL, CT 06067
PHONE (860) 263-3800

EPA CONTRACT NO. EP-S1-06-01
DURHAM MEADOWS WATERLINE RD
DURHAM AND MIDDLETOWN, CONNECTICUT
TASK ORDER NO. 0060-RD-RD-0105

TOWN OF DURHAM

DURHAM BOOSTER STATION MODIFICATIONS

MECHANICAL

PROJECT NO: 60275749
CAD DWG FILE: M-107-501
DESIGNED BY: ASM
DRAWN BY: ASM
DEPT CHECK: GRS
PROJ CHECK: MWM
DATE: APRIL 2018
SCALE: AS NOTED

M-111

ANSI D – 9-Apr-18

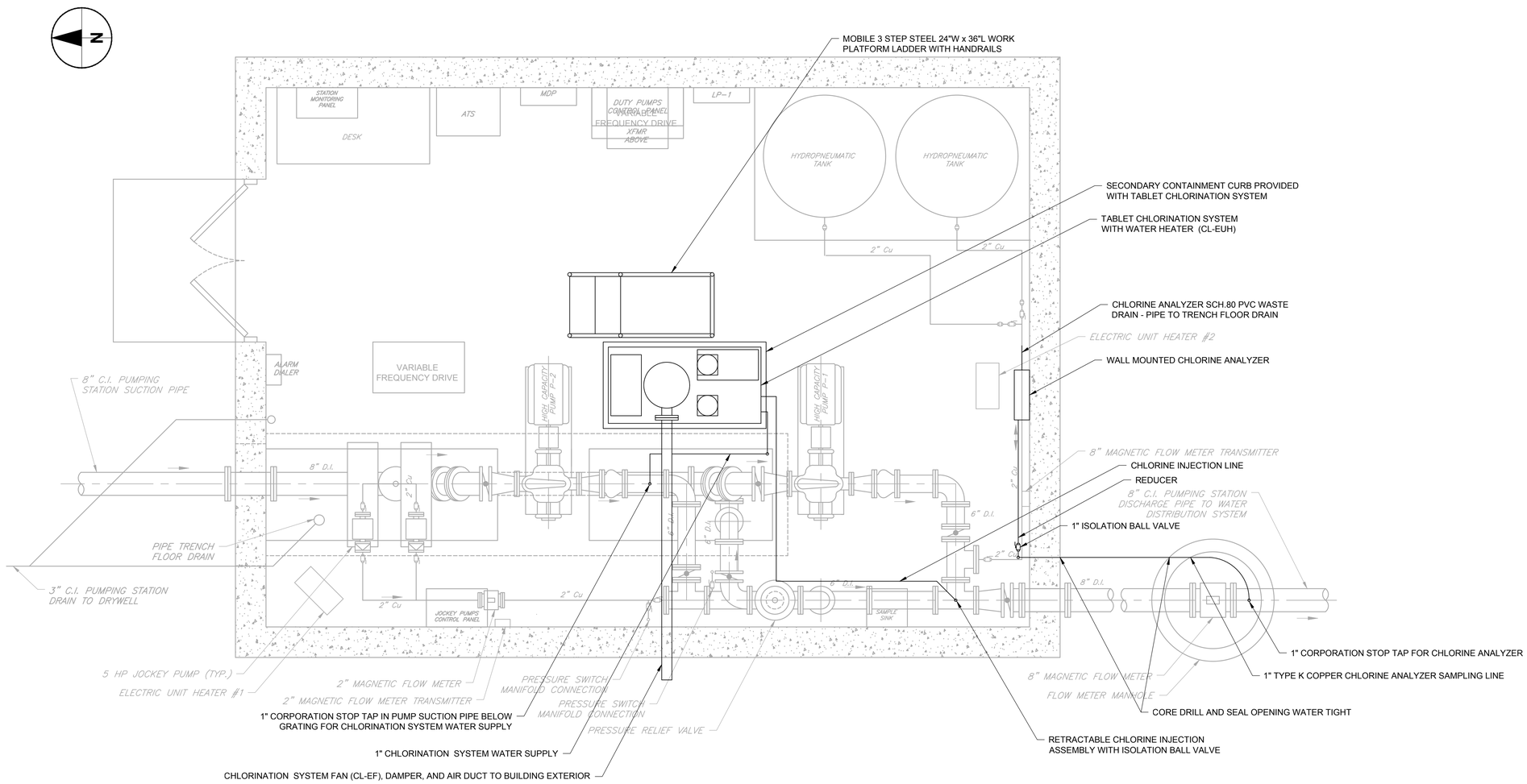

NOTES:

1. THE LONG HILL BOOSTER STATION MUST REMAIN IN SERVICE AT ALL TIMES.
2. CONTRACTOR SHALL PREPARE AND SUBMIT FOR CONTRACTING OFFICER AND CITY OF MIDDLETOWN, WATER AND SEWER DEPARTMENT APPROVAL HIS CONSTRUCTION WORK PLAN AND SEQUENCE OF WORK INDICATING THE METHODS AND STEP BY STEP WORK SEQUENCES HE INTENDS TO UTILIZE TO COMPLETE THE WORK AND MAINTAIN PUM[PING STATION OPERATION.
3. REFER TO SPECIFICATION SECTION 11353 FOR DETAILS REGARDING THE PROPOSED TABLET CHLORINATION SYSTEM, CHLORINE ANALYZER AND ACCESSORIES.
4. CONTRACTOR SHALL REPAIR OR TOUCH-UP ALL PAINTED SURFACES DAMAGED OR DISTURBED BY HIS OPERATIONS.

MARK	DATE	MADE BY	CHECKED	DESCRIPTION
				100% SUBMITTAL

REVISIONS

AECOM, INC.
250 APPLEWOOD DRIVE
ROCKY HILL, CT 06067
PHONE (860) 263-3800

EPA CONTRACT NO. EP-S1-06-01
DURHAM MEADOWS WATERLINE RD
DURHAM AND MIDDLETOWN, CONNECTICUT
TASK ORDER NO. 0060-RD-RD-01D5

CITY OF MIDDLETOWN
LONG HILL STATION MODIFICATIONS
MECHANICAL

PROJECT NO:	60275749
CAD DWG FILE:	M-107-501
DESIGNED BY:	ASM
DRAWN BY:	ASM
DEPT CHECK:	GRS
PROJ CHECK:	MWM
DATE:	APRIL 2018
SCALE:	AS NOTED

M-112

ANSI D – 9-Apr-18

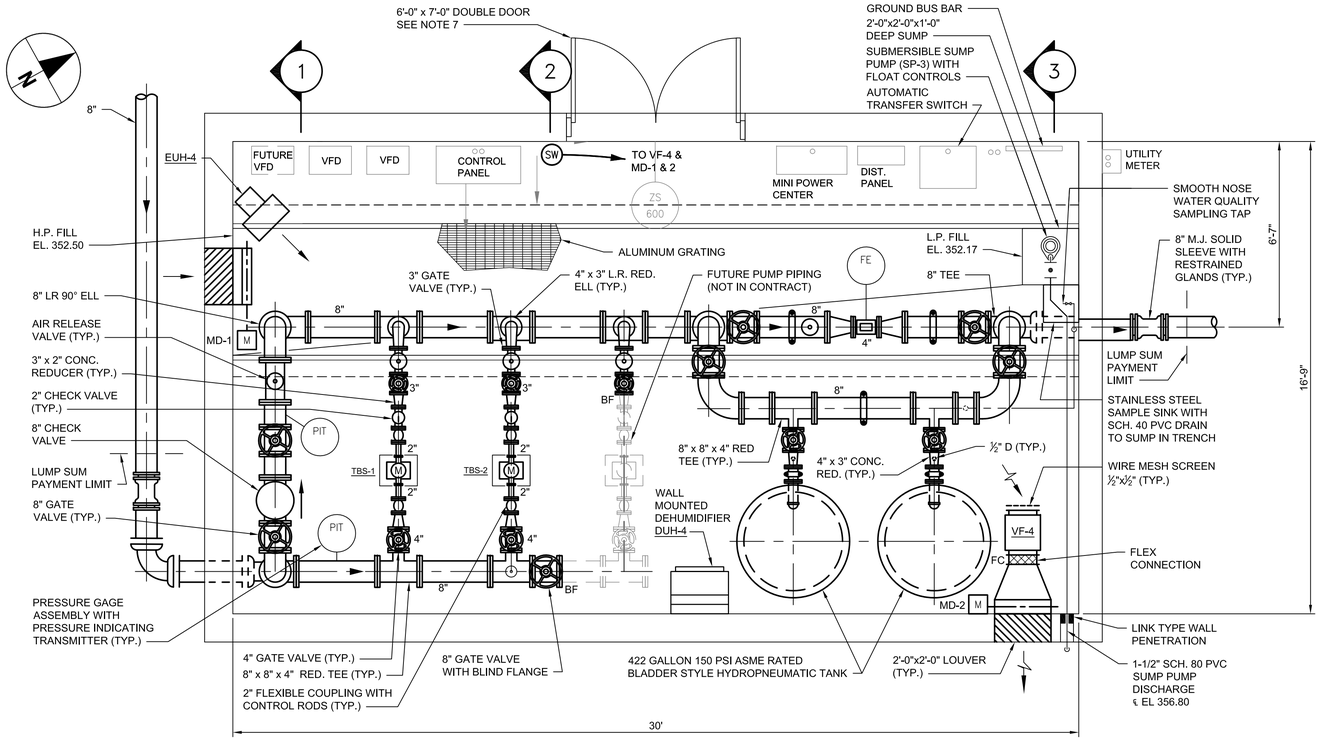

PLAN

SCALE: 3/8"=1'-0"

TALCOTT RIDGE BOOSTER STATION PUMP SCHEDULE

TAG NO.	LOCATION	CAPACITY (GPM)	PUMP HEAD (FT.)	TOTAL DYNAMIC HEAD (FEET)	HORSEPOWER	MOTOR CHARACTERISTICS	MOTOR RPM	REMARKS
TBS-1, TBS-2	BOOSTER STATION	45	101	101	2	3 PH, 480 V, 60 HZ, TEFC	1800 (MAX.)	VFD

NOTES:

1. PUMP MIN. EFFICIENCY AT SPECIFIED RATING: 69
2. PUMP SHUTOFF HEAD: 140 (FT.)
3. STAGES: 8

SCALE: 3/8" = 1'-0"

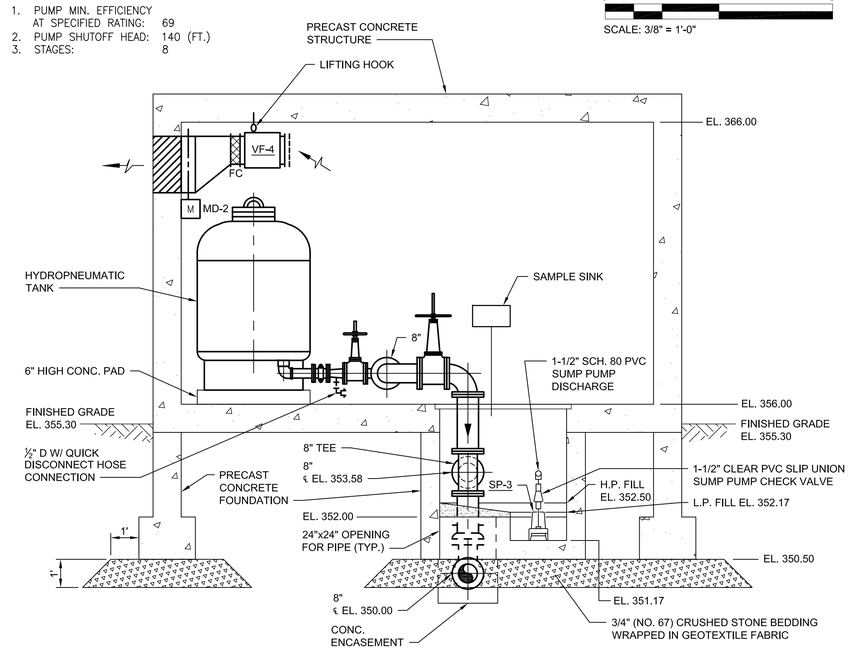

SECTION 3

SCALE: 3/8"=1'-0"

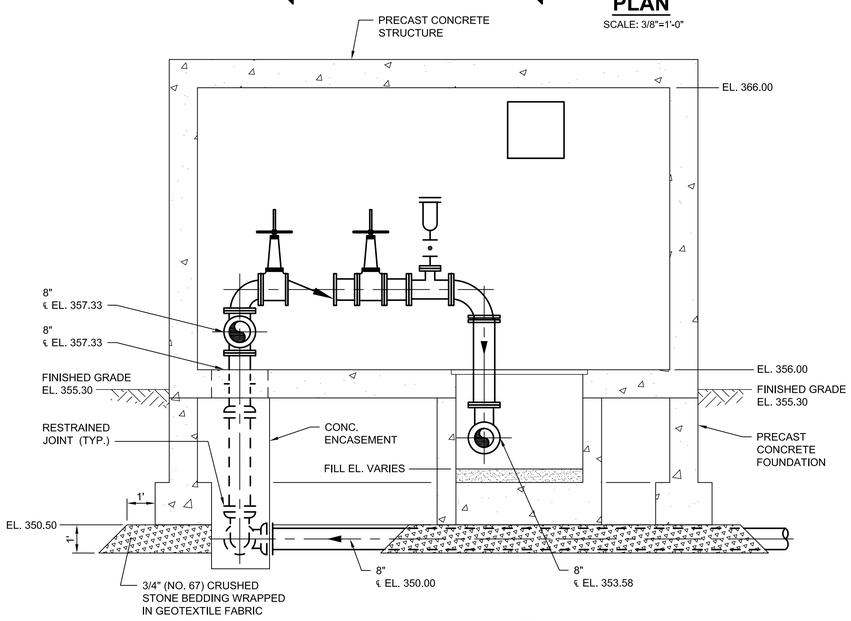

SECTION 1

SCALE: 3/8"=1'-0"

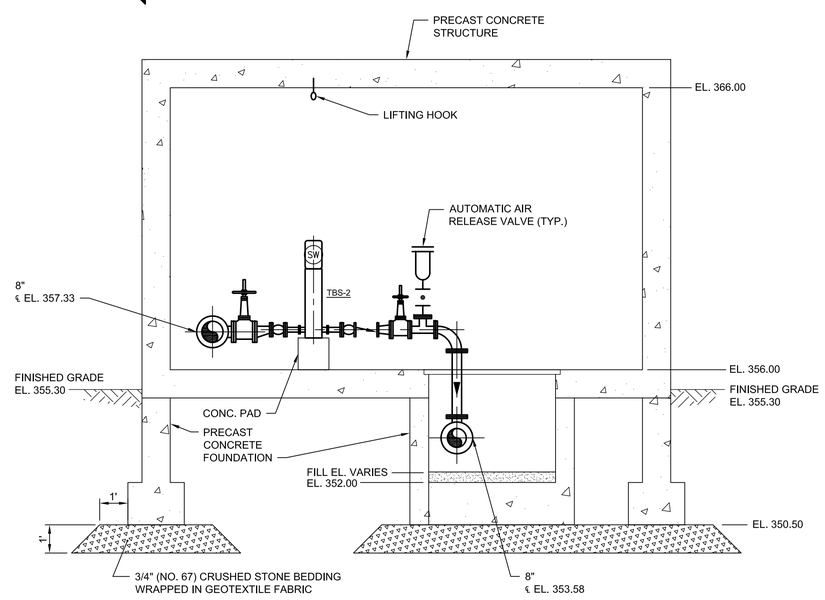

SECTION 2

SCALE: 3/8"=1'-0"

SUBMERSIBLE SUMP PUMP (SP-3) CHARACTERISTICS
ELECTRICAL: 115V, 1 PH, 60 HZ, 0.3 HP, FLA.=9.7 A
PERFORMANCE REQUIREMENTS: 34 GPM @ 10' TDH
PUMP ON AT 9.25' AND PUMP OFF AT 5" ABOVE SUMP BOTTOM
DESIGN BASIS: ZOELLER PUMP MODEL M57
PROVIDE 2" HIGH PUMP STAND OPTION

NOTES:

1. REFER TO DRAWING C-9 FOR SITE WORK.
2. REFER TO DRAWING DI-7 FOR INSTRUMENTATION WORK.
3. REFER TO DRAWINGS E-14 AND E-15 FOR ELECTRICAL WORK.
4. REFER TO DRAWING M-501 FOR MECHANICAL EQUIPMENT SCHEDULES AND DETAILS.
5. PROVIDE TYPE 304L STAINLESS STEEL VENTILATION DUCT SUPPORTS.
6. REFER TO S-001 AND A-502 FOR ADDITIONAL BUILDING DETAILS.
7. MATCH CITY OF MIDDLETOWN KEY SYSTEM FOR ALL DOORS AND GATES.

MARK	DATE	MADE BY	CHECKED	DESCRIPTION

REVISIONS

AECOM, INC.
500 SOUTHBURY DRIVE
ROCKY HILL, CT 06067
PHONE (860) 263-3800

AECOM

EPA CONTRACT NO. EP-S1-06-01
DURHAM MEADOWS WATERLINE RD
DURHAM AND MIDDLETOWN, CONNECTICUT
TASK ORDER NO. 0060-RD-RD-01D5

CITY OF MIDDLETOWN - TALCOTT RIDGE BOOSTER STATION PLAN AND SECTIONS

MECHANICAL

PROJECT NO:	60275749
CAD DWG FILE:	M-113
DESIGNED BY:	ASM
DRAWN BY:	ASM
DEPT CHECK:	GRS
PROJ CHECK:	MWM
DATE:	APRIL 2018
SCALE:	AS NOTED

M-113

P: 60275749-DUR\D
ANSI B – 5-Apr-18

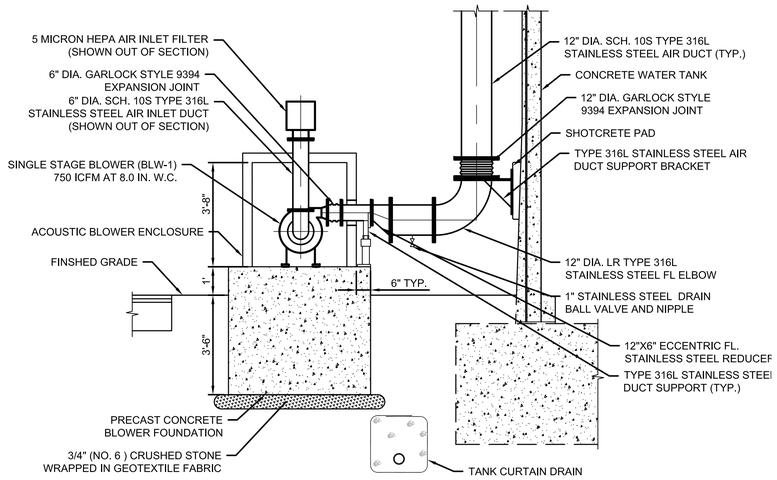

SECTION A - A

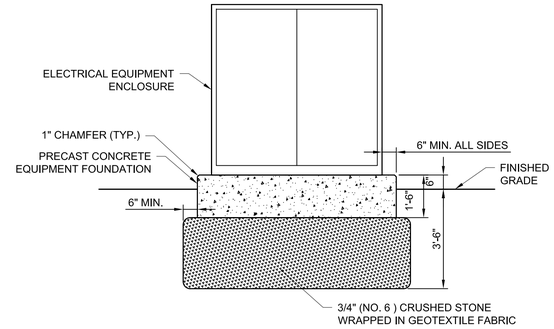

NOTES:
1. CONCRETE SHALL HAVE A MINIMUM 28 DAY COMPRESSIVE STRENGTH OF 5000 PSI.
2. REINFORCEMENT SHALL BE GRADE 60 STEEL.
3. PROVIDE 3" REINFORCEMENT COVER ON FOUNDATION BOTTOM AND SIDES. PROVIDE 2" REINFORCEMENT COVER ON TOP.
4. BOX OUT CONDUIT PENETRATIONS IN FOUNDATION TO ALLOW CONDUITS TO MOVE FREELY.
5. ANCHOR ELECTRICAL EQUIPMENT ENCLOSURES TO FOUNDATION WITH TYPE 316L STAINLESS STEEL EPOXY ANCHORS. WEDGE ANCHORS ARE NOT ACCEPTABLE.
6. REFER TO ELECTRICAL DRAWINGS FOR ENCLOSURE AND CONDUIT DETAILS

ELECTRICAL ENCLOSURE FOUNDATION DETAIL

NOT TO SCALE

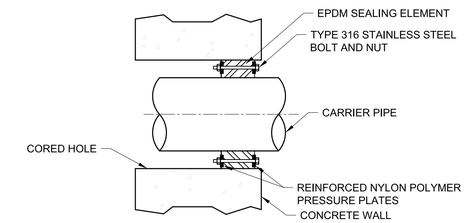

WALL PENETRATION SEAL DETAIL

NOT TO SCALE

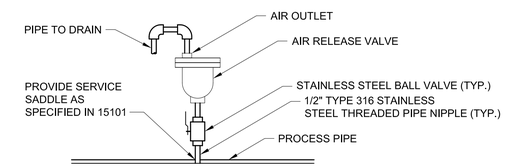

AIR RELEASE VALVE ASSEMBLY DETAIL

NOT TO SCALE

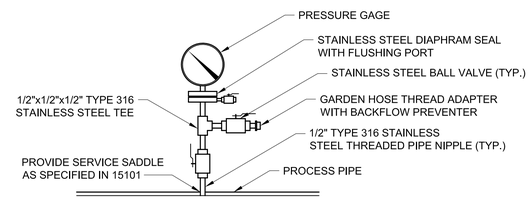

PRESSURE GAGE ASSEMBLY DETAIL

NOT TO SCALE

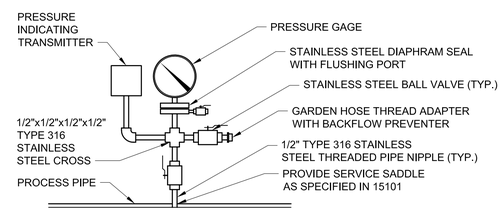

PRESSURE GAGE ASSEMBLY DETAIL WITH PRESSURE INDICATING TRANSMITTER

NOT TO SCALE

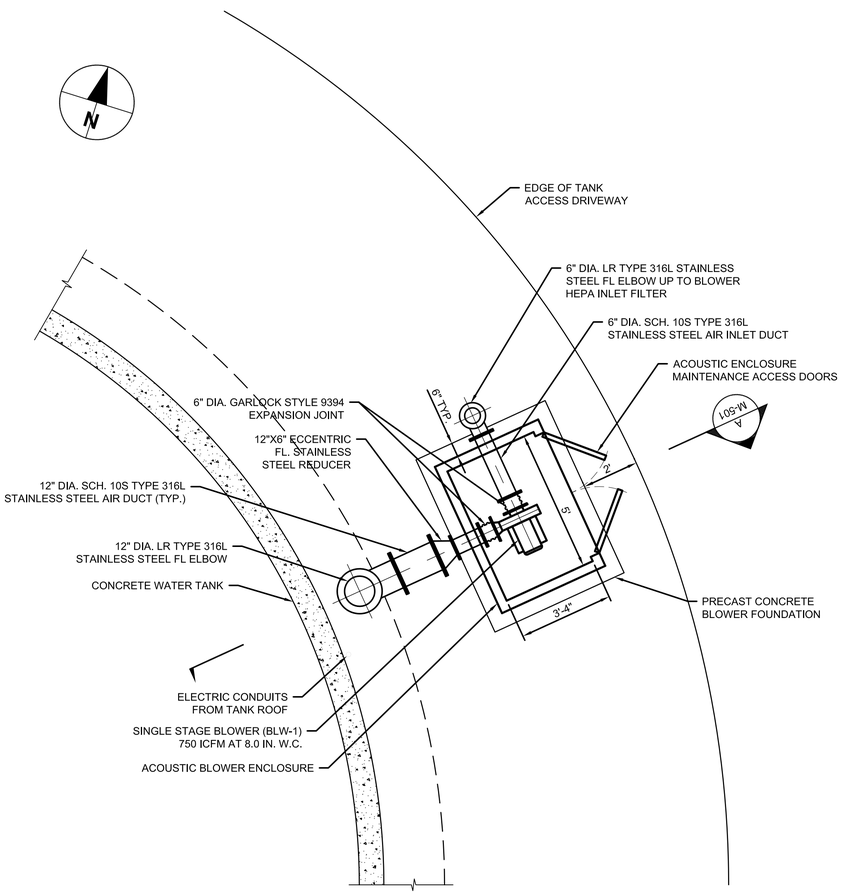

PLAN

TANK VENTILATION BLOWER DETAIL

NOT TO SCALE

VAULT EQUIPMENT SCHEDULE

TAG NUMBER	DESCRIPTION	MANUFACTURER MODEL NUMBER (BASIS OF DESIGN)	OPERATING CHARACTERISTICS	ELECTRICAL CHARACTERISTICS	NOTES	REMARKS
DUH-1, 2, 3, 4	DEHUMIDIFICATION UNIT	DESERT-AIRE HPR 120 LOW TEMP	WALL MOUNTED	115 VAC, 1 PH, 60 HZ, 0.51 KW	WALL MOUNT, ELECTROFIN COATING	OR EQUAL
EUH-1, 2, 3	ELECTRIC UNIT HEATER	INDEECO 234-U11N-0030J DT	WALL MOUNTED CORROSION RESISTANT	3 KW, 240 VAC, 1 PH, 60 HZ	INTERNAL THERMOSTAT 40 – 100° F	OR EQUAL
EUH-4	ELECTRIC UNIT HEATER	INDEECO 234-U11N-0050U DT	WALL MOUNTED	5 KW,480 VAC, 3 PH, 60 HZ	INTERNAL THERMOSTAT 40 – 100° F	OR EQUAL
SP-1, 2, 3	SUMP PUMP	ZOELLER MODEL M57	34 GPM @ 10 FT TDH	0.3 HP, 115 VAC, 1 PH, 60 HZ	REFER TO SPEC. 11316	OR EQUAL
VF-1, 3	VENTILATION FAN	FANTECH FR250 – 10 IN, SS	500 CFM @0.5 IN. W.C.	115 VAC, 1 PH, 60 HZ, 2.4 FLA	PROVIDE FLEXIBLE CONNECTIONS, INLET GUARD	OR EQUAL
VF-2	VENTILATION FAN	GREENHECK-SQ-85-D	300 CFM @ 0.4 IN. W.C. EXT	115 VAC, 1 PH, 60 HZ, 1/12 HP	PROVIDE FLEXIBLE CONNECTIONS, INLET GUARD	OR EQUAL
VF-4	VENTILATION FAN	GREENHECK-SQ-100-A	1,100 CFM @ 0.4 IN. W.C. EXT	115 VAC, 1 PH, 60 HZ, 1/3 HP	PROVIDE FLEXIBLE CONNECTIONS, INLET GUARD	OR EQUAL

NOTES:
1. EUH ADJUSTABLE THERMOSTAT TO AUTOMATICALLY MAINTAIN TEMPERATURE. SWIVEL MOUNTING BRACKET.
2. SP TO BE SUPPLIED WITH FLOAT CONTROLS TO OPERATE ON AT 9-1/4 INCHES AND OFF AT 5-INCHES ABOVE SUMP BOTTOM ELEVATION. PROVIDE 2-INCH HIGH PUMP STAND OPTION.

EQUIPMENT LOCATION SCHEDULE

TAG NUMBER	LOCATION	DRAWING REFERENCE
DUH-1	ALTITUDE VALVE VAULT	M-107
EUH-1	ALTITUDE VALVE VAULT	M-107
VF-1	ALTITUDE VALVE VAULT	M-107
DUH-2	WATER METER VAULT	M-109
EUH-2	WATER METER VAULT	M-109
VF-2	WATER METER VAULT	M-109
SP-1	WATER METER VAULT	M-109
DUH-3	PRESSURE REDUCING VALVE VAULT	M-110
EUH-3	PRESSURE REDUCING VALVE VAULT	M-110
VF-3	PRESSURE REDUCING VALVE VAULT	M-110
SP-2	PRESSURE REDUCING VALVE VAULT	M-110
SN.P-1	CHERRY HILL WATER TANK	M-101
MIX-1	CHERRY HILL WATER TANK	M-101
BLW-1	CHERRY HILL WATER TANK	M-501
P1	LONG HILL STATION	M-112
P2	LONG HILL STATION	M-112
CL-EF	LONG HILL STATION	M-112
CL-EUH	LONG HILL STATION	M-112
DUH-4	TALCOTT RIDGE STATION	M-113
EUH-4	TALCOTT RIDGE STATION	M-113
VF-4	TALCOTT RIDGE STATION	M-113
SP-3	TALCOTT RIDGE STATION	M-113

NOTE: REFER TO SPECIFICATION SECTION 11355, THM REMOVAL SYSTEM FOR BLW-1, MIX-1, AND SN.P-1 EQUIPMENT DETAILS.

MARK	DATE	MADE BY	CHECKED	DESCRIPTION

REVISIONS

AECOM, INC.
500 ENTERPRISE DRIVE
ROCKY HILL, CT 06067
PHONE (860) 263-3800

AECOM

EPA CONTRACT NO. EP-S1-06-01
DURHAM MEADOWS WATERLINE RD
DURHAM AND MIDDLETOWN, CONNECTICUT
TASK ORDER NO. 0060-RD-RD-0105

CITY OF MIDDLETOWN & TOWN OF DURHAM
STANDARD DETAILS
MECHANICAL

PROJECT NO: 60275749
CAD DWG FILE: M-501
DESIGNED BY: ASM
DRAWN BY: ASM
DEPT CHECK: GRS
PROJ CHECK: MWM
DATE: APRIL 2018
SCALE: AS NOTED

M-501

ANSI B – 11-Apr-18

GENERAL

1. ALL WORK SHALL CONFORM TO THE 2016 CONNECTICUT STATE BUILDING CODE, INCLUDING ERRATA #1, THE INTERNATIONAL BUILDING CODE 2015 AND TO OTHER CODES AND REFERENCES INDICATED OR SPECIFIED. IN CASE OF CONFLICT, THE MORE STRINGENT REQUIREMENT SHALL GOVERN.

2. DESIGN LOADS:

   A. FLOOR LIVE LOAD: INDICATED ON PLANS

   B. ROOF LIVE LOAD: INDICATED ON PLANS

   C. SNOW LOAD:

   GROUND SNOW LOAD (PG): 30 PSF
   FLAT ROOF SNOW LOAD (PF): 23 PSF
   SNOW EXPOSURE FACTOR (CE): 1.00
   SNOW LOAD IMPORTANCE FACTOR (IS): 1.1
   SNOW THERMAL FACTOR (CT): 1.00

   D. WIND LOAD:

   BASIC WIND SPEED: 135 MPH FACTORED 3 SECOND GUST
   RISK CATEGORY: III
   BASIC BUILDING SYSTEM: ENCLOSED BUILDING
   EXPOSURE CATEGORY: C
   INTERNAL PRESSURE COEFFICIENT: ±0.18
   COMPONENTS AND CLADDING DESIGN WIND PRESSURE: SEE DIAGRAM

   E. SEISMIC LOAD:

   SEISMIC IMPORTANCE FACTOR (IE): 1.25
   OCCUPANCY CATEGORY: III
   MAPPED SPECTRAL RESPONSE COEFFICIENTS
   S(S): 0.180 S(1): 0.063
   SPECTRAL RESPONSE COEFFICIENTS
   S(DS): 0.140 S(D1): 0.070
   SITE CLASS: CLASS C
   SEISMIC DESIGN CATEGORY: B

3. FROST DEPTH AT THE SITE IS 3'–6" BELOW FINISHED GRADE.

4. DO NOT SCALE DRAWINGS TO OBTAIN DIMENSIONAL INFORMATION. MISSING OR CONFLICTING DIMENSIONS SHALL BE BROUGHT TO THE ATTENTION OF THE ENGINEER.

5. REFER TO CIVIL, MECHANICAL, PLUMBING, FIRE PROTECTION AND ELECTRICAL DRAWINGS AND SPECIFICATIONS FOR LOCATIONS AND DIMENSIONS OF CHASES, SLOTS, INSERTS, CURBS, OPENINGS, SLEEVES, ANCHOR RODS, FLOOR PITCHES, ANGLE FRAMES, GATE FRAMES, AND OTHER PROJECT REQUIREMENTS NOT INDICATED ON STRUCTURAL DRAWINGS.

6. COORDINATE DIMENSIONS AND VERIFY LOCATION OF STRUCTURAL ELEMENTS WITH PURCHASED EQUIPMENT. ANCHOR BOLTS SHALL BE SIZED AND FURNISHED BY THE EQUIPMENT SUPPLIER UNLESS OTHERWISE INDICATED.

7. PROVIDE OPENINGS REQUIRED FOR PURCHASED EQUIPMENT. PROVIDE ANCHOR RODS, NUTS, NON–SHRINK NON–METALLIC GROUT, CONCRETE PADS AND REINFORCING STEEL REQUIRED FOR THE INSTALLATION OF EQUIPMENT.

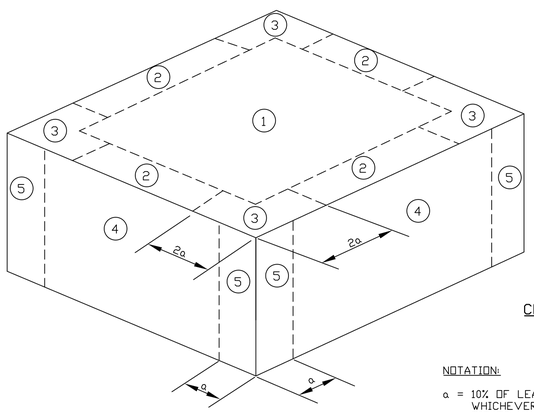

COMPONENTS AND CLADDING
WIND PRESSURES
PRESSURES ARE BASED UPON ASCE/SEI 7–10
(FACTORED LOADS)

NOTATION:

a = 10% OF LEAST HORIZONTAL DIMENSION OR 0.4H WHICHEVER IS SMALLER, BUT NOT LESS THAN EITHER 4% OF LEAST HORIZONTAL DIMENSION OR 3.0 FEET.

h = MEAN ROOF HEIGHT OR EAVE HEIGHT FOR SLOPES LESS THAN 10 DEGREES.

METER BUILDING

WIND PRESSURES: COMPONENTS & CLADDING		
ZONE	POSITIVE PRESSURE	NEGATIVE PRESSURE
1	0 PSF	-40 PSF
2	0 PSF	-67 PSF
3	0 PSF	-100 PSF
4	30 PSF	-43 PSF
5	30 PSF	-53 PSF

PUMP STATION BUILDING

WIND PRESSURES: COMPONENTS & CLADDING		
ZONE	POSITIVE PRESSURE	NEGATIVE PRESSURE
1	0 PSF	-40 PSF
2	0 PSF	-67 PSF
3	0 PSF	-100 PSF
4	30 PSF	-43 PSF
5	30 PSF	-53 PSF

CONCRETE ANCHORS

1. EXPANSION TYPE ANCHORS SHALL CONFORM TO THE REQUIREMENTS OF ASTM E 488, 'STANDARD TEST METHODS FOR STRENGTH OF ANCHORS IN CONCRETE AND MASONRY ELEMENTS' AND ICBO ES AC–193, 'ACCEPTANCE CRITERIA FOR MECHANICAL ANCHORS IN CONCRETE AND ELEMENTS'.

2. ADHESIVE TYPE ANCHORS SHALL CONFORM TO THE REQUIREMENTS OF ASTM E 488, 'STANDARD TEST METHODS FOR STRENGTH OF ANCHORS IN CONCRETE AND MASONRY ELEMENTS', ASTM 1512, 'STANDARD TEST METHODS FOR TESTING BOND PERFORMANCE OF ADHESIVE–BONDED ANCHORS', ICBO ES AC–308, 'ACCEPTANCE CRITERIA FOR POST–INSTALLED ADHESIVE ANCHORS' AND ACI 355.4 'QUALIFICATION OF POST–INSTALLED ANCHORS IN CONCRETE'.

3. PROVIDE SIZE, TYPE AND EMBEDMENT OF ANCHOR INDICATED INSTALLED TO DEVELOP THE MAXIMUM CAPACITY FOR THE EMBEDMENT, TYPE AND ANCHOR SIZE WITH A MINIMUM SAFETY FACTOR OF FOUR.

4. ANCHORS SHALL HAVE STANDARD UNC THREADS, UNLESS OTHERWISE INDICATED.

5. ANCHOR INSTALLATION SHALL CONFORM TO THE MANUFACTURER'S CURRENT PRINTED INSTRUCTIONS.

6. REMOVE DUST AND DEBRIS FROM DRILLED HOLES USING COMPRESSED AIR OR VACUUM AT BOTTOM OF HOLE. IMMEDIATELY REMOVE STANDING WATER AND THOROUGHLY DRY HOLES TO RECEIVE ADHESIVE ANCHORS.

7. DO NOT HAMMER IN ANCHORS. INSTALL ANCHORS USING A ROTARY HAMMER DRILL AS RECOMMENDED BY ANCHOR MANUFACTURER. THE USE OF HAMMER IN TYPE ADHESIVE CAPSULES IS PROHIBITED.

8. PROVIDE EXPANSION TYPE ANCHORS WITH NUT AND WASHER. EXPANSION TYPE ANCHORS SHALL BE:

   A. HILTI: KWIK–BOLT TZ;
   B. ITW REDHEAD/RAMSET: TRUBOLT+;
   C. POWERS FASTENERS: POWERSTUD+ SD1;
   D. SIMPSON: STRONG BOLT 2;
   E. OR APPROVED EQUAL.

10. PROVIDE ADHESIVE TYPE ANCHORS CONSISTING INJECTABLE ADHESIVE CARTRIDGES AND THREADED ANCHOR BOLTS SUPPLIED AS A SYSTEM BY ONE MANUFACTURER. PROVIDE EACH ANCHOR WITH NUT AND WASHER. AFTER INSTALLATION, DO NOT DISTURB OR LOAD ANCHORS BEFORE THE SPECIFIED CURING TIME ELAPSES (MAY VARY WITH TEMPERATURE). ADHESIVE ANCHORING SYSTEM SHALL BE:

   A. HILTI: HIT–HY 200R;
   B. ITW REDHEAD/RAMSET: EPCON G5;
   C. POWERS FASTENERS: PE1000+;
   D. SIMPSON: STRONG–TIE SET–XP;
   E. OR APPROVED EQUAL.

SEISMIC AND WIND REQUIREMENTS

1. THE CONTRACTOR SHALL BE RESPONSIBLE FOR COMPLIANCE WITH THE SEISMIC AND WIND REQUIREMENTS SPECIFIED INCLUDING CONFORMANCE BY ALL SUBCONTRACTORS, MANUFACTURERS AND SUPPLIERS.

2. COMPONENTS ARE DEFINED AS SYSTEMS, EQUIPMENT, PARTS, OR OTHER ELEMENTS, INCLUDING SUPPORTING STRUCTURES AND ATTACHMENTS.

3. THE REFERENCE BUILDING CODE IS THE BUILDING CODE CITED ON THE STRUCTURAL DRAWINGS OR SPECIFIED HEREIN FOR THE DESIGN OF THE BASIC STRUCTURE.

4. THE SPECIFIED SEISMIC CRITERIA IS DEFINED AS THE SEISMIC CRITERIA CITED ON THE STRUCTURAL DRAWINGS OR SPECIFIED HEREIN FOR THE DESIGN OF THE BASIC STRUCTURE.

5. THE SPECIFIED WIND CRITERIA IS DEFINED AS THE WIND CRITERIA CITED ON THE STRUCTURAL DRAWINGS OR SPECIFIED HEREIN FOR THE DESIGN OF THE BASIC STRUCTURE.

6. SEISMIC AND WIND DESIGN REQUIREMENTS:

   A. SEISMIC AND WIND DESIGN SHALL CONFORM TO THE INTERNATIONAL BUILDING CODE AND ASCE/SEI 7.

   B. ARCHITECTURAL, MECHANICAL, ELECTRICAL AND NON–STRUCTURAL COMPONENTS SHALL BE DESIGNED AND CONSTRUCTED TO RESIST THE SEISMIC AND WIND FORCES AND DISPLACEMENTS BASED UPON ASCE/SEI 7, THE REFERENCE BUILDING CODE, AND THE SPECIFIED SEISMIC AND WIND CRITERIA. IN THE CASE OF CONFLICT THE MORE STRINGENT REQUIREMENTS SHALL GOVERN.

   C. THE INTERRELATIONSHIP OF COMPONENTS AND THEIR EFFECT ON EACH OTHER SHALL BE SUCH THAT THE FAILURE OF ONE COMPONENT SHALL NOT CAUSE THE FAILURE OF ANY OTHER COMPONENT.

7. COMPONENTS SHALL BE ANCHORED TO THE BUILDING STRUCTURE TO TRANSFER SEISMIC AND WIND FORCES. CONNECTIONS SHALL BE BOLTED, WELDED OR OTHERWISE POSITIVELY ANCHORED TO THE STRUCTURE. ANCHORAGE SHALL NOT RELY ON FRICTION FOR FORCE TRANSFER.

   A. POST–INSTALLED ANCHORS IN CONCRETE SHALL BE PREQUALIFIED FOR SEISMIC APPLICATIONS IN ACCORDANCE WITH ACI 355.2, ICC–ES AC–193, OR ICC–ES AC–308. DROP–IN ANCHORS ARE PROHIBITED FOR CONCRETE ANCHORAGE.

   B. POST–INSTALLED ANCHORS IN MASONRY SHALL BE PREQUALIFIED FOR SEISMIC APPLICATIONS IN ACCORDANCE WITH ICC–ES AC–01, OR ICC–ES AC–58. DROP–IN ANCHORS ARE PROHIBITED FOR MASONRY ANCHORAGE.

   C. EXCEPTIONS: EXEMPTION FROM THE REQUIREMENTS FOR SEISMIC AND WIND ANALYSIS AND DESIGN ARE PERMITTED ONLY TO THE EXTENT PERMITTED BY APPLICABLE CODES AND STANDARDS.

8. SUBMIT CERTIFICATION, SIGNED AND SEALED BY A PROFESSIONAL STRUCTURA ENGINEER REGISTERED IN THE JURISDICTION IN WHICH THE PROJECT IS LOCATED STATING THAT ALL SYSTEMS, EQUIPMENT, AND OTHER ELEMENTS, INCLUDING SUPPORTING STRUCTURES, ATTACHMENTS AND CONNECTIONS ARE DESIGNED TO WITHSTAND THE REQUIRED SEISMIC AND WIND FORCES AND DISPLACEMENTS.

9. DUCTWORK: EQUIPMENT INSTALLED WITHIN DUCTWORK SHALL BE INDEPENDENTLY SUPPORTED AND BRACED. SUPPORT AND BRACING OF HEATING AND COOLING COILS SHALL ACCOUNT FOR THE WEIGHT OF THE CONTENTS.

10. PIPING SYSTEMS: SUPPORT AND BRACING OF PIPING SYSTEMS SHALL ACCOUNT FOR THE WEIGHT AND HYDRODYNAMIC EFFECTS OF THE CONTENTS.

11. GENERAL SUPPORTS: PIPE, DUCT, RACEWAYS AND CABLE TRAY SUPPORTS AND BRACING SHALL CONFORM TO THE AISC MANUAL OF STEEL CONSTRUCTION AND MSS SP–58 IN ADDITION TO THE FORCE AND DISPLACEMENT REQUIREMENTS OF THE REFERENCE CODE.

FOUNDATION

1. FOUNDATION DESIGNS SHALL BE BASED UPON A NET ALLOWABLE SOIL BEARING PRESSURE OF 4,000 PSF..

2. PERCENT COMPACTION IS DEFINED AS THE RATIO OF THE FIELD DRY DENSITY, DETERMINED BY ASTM D–1556, TO THE MAXIMUM DRY DENSITY, DETERMINED BY ASTM–D 1557 (MODIFIED PROCTOR).

3. COMPACT BACKFILL UNDER FOUNDATION MATS, BASE SLABS, FOOTINGS, AND SLABS ON GRADE TO A MINIMUM OF 95 PERCENT. COMPACT EMBANKMENTS AND BACKFILL NOT SUPPORTING STRUCTURES TO A MINIMUM OF 90 PERCENT. PLACE AND COMPACT ALL BACKFILL IN 8–INCH MAXIMUM LAYERS.

4. COMPACT THE BOTTOM SURFACE OF EXPOSED EXCAVATIONS WITH A VIBRATORY STEEL DRUM ROLLER OR VIBRATORY PLATE TO ACHIEVE A NEAR SURFACE DENSITY OF AT LEAST 95 PERCENT.

5. PROVIDE FOUNDATION PREPARATION AS INDICATED ON THE STANDARD DETAIL UNDER ALL FOUNDATION SLABS, MATS AND FOOTINGS.

6. DO NOT PLACE FOUNDATION CONCRETE IN WATER OR ON FROZEN OR DISTURBED GROUND.

7. PLACE EXTERIOR SLABS, PLATFORMS AND WALKS ON 8–INCH LAYERS OF NON–FROST SUSCEPTIBLE MATERIAL (SELECT BORROW, SCREENED GRAVEL OR CRUSHED STONE BACKFILL HAVING NOT MORE THAN 5 PERCENT BY WEIGHT PASSING A NO. 200 SIEVE). THE LIMITS OF BACKFILL ARE DEFINED BY AN OUTWARD SLOPE OF 1:1 FROM THE PERIMETER OF THE SLAB TO A DEPTH OF FOUR FEET BELOW FINISH GRADE UNLESS OTHERWISE INDICATED OR SPECIFIED. PLACE MATERIAL IN 8–INCH LIFTS. COMPACT SELECT BORROW TO 95 PERCENT. COMPACT SCREENED GRAVEL AND CRUSHED STONE USING A SELF–PROPELLED VIBRATORY STEEL DRUM ROLLER OR RUBBER TIRE ROLLERS WITH A MINIMUM OF FOUR PASSES IN DIRECTIONS PERPENDICULAR TO ONE ANOTHER IN OPEN AREAS. IN SMALL AREAS, USE MANUALLY OPERATED VIBRATORY PLATE COMPACTORS WITH A MINIMUM OF FOUR PASSES.

PRECAST CONCRETE BUILDINGS

1. THE FACTORY PRECAST BUILDING SHALL HAVE INTERIOR DIMENSIONS OF APPROXIMATELY 30'–0" X 16'–9" IN PLAN BY 10'–0" HIGH TO BARE CONCRETE (PUMP STATION) OR APPROXIMATELY 30'–0" X 11'–0" IN PLAN BY 8'–6" HIGH TO BARE CONCRETE (METER BUILDING). ALL FACTORY–BUILT PRECAST CONCRETE BUILDINGS SHALL BE SUPPLIED IN ACCORDANCE WITH PROJECT PLANS AND SPECIFICATIONS.

2. ALL PRECAST CONCRETE BUILDINGS SHALL BE DELIVERED FOB TO THE JOBSITE AND INSTALLED BY THE GENERAL CONTRACTOR.

3. THE PRECAST CONCRETE BUILDING MANUFACTURER SHALL PROVIDE ALL LIFTING CABLES AND HARDWARE NEEDED TO OFF–LOAD AND SET THE BUILDING WITHOUT DAMAGE TO THE WALLS OR ROOF.

4. THE PRECAST CONCRETE BUILDING MANUFACTURER SHALL WARRANT THE BUILDING AND ITS COMPONENTS FOR ONE YEAR FROM THE DATE OF INSTALLATION.

5. THE PRECAST CONCRETE BUILDING MANUFACTURER SHALL SUBMIT SHOP DRAWINGS IN ACCORDANCE WITH THE REQUIREMENTS OF THE PROJECT SHOWING DIMENSIONS, SIZES, THICKNESS, MATERIALS, FINISHES, AND METHOD OF ASSEMBLY AND SUBMIT TECHNICAL DATA FOR ALL BUILDING HARDWARE AND EQUIPMENT. ALL WORK SHALL BE FABRICATED AND ERECTED IN ACCORDANCE WITH THE MANUFACTURER'S DRAWINGS.

6. THE PRECAST CONCRETE BUILDING MANUFACTURER SHALL HAVE A MINIMUM OF FIVE YEARS EXPERIENCE IN BUILDING FABRICATION. IN ADDITION, THE MANUFACTURER SHALL HAVE NO LESS THAN TEN BUILDING SIMILAR TO THE ONES ON THIS PROJECT. EVIDENCE MUST BE SUBMITTED TO VERIFY THAT THESE REQUIREMENTS ARE MET PRIOR TO BEING DEEMED AN ACCEPTABLE MANUFACTURER.

7. THE PRECAST CONCRETE BUILDING SHALL BE MANUFACTURED IN A PCI CERTIFIED PLANT. IN ADDITION, THE BUILDING MANUFACTURER MUST MAINTAIN "CERTIFICATION IN GOOD STANDING" FOR PRODUCT GROUPS B & C, UNDER THE PCI PLANT CERTIFICATION PROGRAM.

8. CONCRETE WORK SHALL CONFORM TO THE STANDARD SPECIFICATIONS FOR STRUCTURAL CONCRETE (ACI 318).

9. PROVIDE NORMAL WEIGHT CONCRETE WITH ASTM C 150, TYPE I, II, OR III PORTLAND CEMENT.

10. PROVIDE FINAL AGGREGATE CONSISTING OF NATURAL SAND CONFORMING TO ASTM C–33.

11. PROVIDE COARSE AGGREGATE CONSISTING OF 1/2" MAXIMUM WELL GRADED CRUSHED STONE CONFORMING TO ASTM C–33.

12. AIR ENTRAINMENT ADMIXTURE SHALL CONFORM TO ASTM C260. THE AIR–ENTRAINED CONTENT SHALL NOT BE LESS THAN 4 PERCENT NOR GREATER THAN 7 PERCENT.

13. A SUPERPLASTICIZER SHALL BE USED AND SHALL CONFORM TO ASTM C494 TYPE F OR G. CONCRETE SHALL BE PLACED AT A SLUMP OF BETWEEN 5 AND 8 INCHES.

14. THE CONCRETE USED FOR THE STRUCTURAL COMPONENTS SHALL ATTAIN A MINIMUM 28–DAY COMPRESSIVE STRENGTH OF 5,000 PSI.

15. PROVIDE WELDED WIRE FABRIC CONFORMING TO ASTM A185.

16. PROVIDE NEW BILLET REINFORCING STEEL CONFORMING TO ASTM A615.

17. ALL REINFORCEMENT SHALL BE FREE FROM LOOSE RUST, OIL, AND CONTAMINATES WHICH REDUCE BOND. ANY FOREIGN MATERIAL SHALL BE REMOVED BY SUITABLE MEANS PRIOR TO INSTALLATION.

18. PROVIDE SUPPORTS FOR REINFORCING INCLUDING CHAIRS, BOLSTER BARS, AND OTHER DEVICES FOR SPACING AND SECURING REINFORCING IN ACCORDANCE WITH CRSI REQUIREMENTS. LEGS OF ALL SUPPORTS IN CONTACT WITH EXPOSED–TO–VIEW SURFACES SHALL BE PLASTIC COATED IN ACCORDANCE WITH CRSI, CLASS I.

19. THE BUILDING SHALL HAVE DUNNAGE PLACED AT THE PROPER LOCATIONS TO PREVENT CRACKING, DISTORTION, OR ANY OTHER PHYSICAL DAMAGE.

20. DOORS AND FRAMES: SHALL COMPLY WITH STEEL DOOR INSTITUTE "RECOMMENDED SPECIFICATIONS FOR STANDARD STEEL DOORS AND FRAMES" (SDI–100). THE BUILDING SHALL BE EQUIPPED WITH DOUBLE 3'–0" X 7'–0" X 1–3/4", 18–GAUGE GALVANIZED/INSULATED LOCKING RIGHT HAND REVERSE METAL DOORS WITH 16–GAUGE GALVANIZED FRAMES. DOORS AND FRAMES SHALL BE BONDERIZED AND PAINTED ONE COAT OF RUST INHIBITIVE PRIMER AND ONE FINISH COAT OF ENAMEL PAINT; COLOR TO BE SELECTED BY OWNER.

21. EXTERIOR FINISH SHALL BE NATURAL STONE VENEER; COLOR AND STYLE TO BE SELECTED BY CITY OF MIDDLETOWN. STONE VENEER TO INCLUDE CORNER DETAIL WITH WRAP–AROUND TO COMPLETE THE INTENDED APPEARANCE OF A STONE BLOCK CONSTRUCTION.

22. INTERIOR WALL FINISH SHALL BE FRP WITH 2" POLYISOCYANURATE RIGID BOARD INSULATION WITH 3/4" FIRE/MOLD TREATED PLYWOOD (DRICON). FLOORING SHALL BE NON SKID EPOXY SLATE GRAY.

23. INTERIOR CEILING FINISH SHALL BE FRP WITH 6" POLYISOCYANURATE RIGID BOARD INSULATION WITH 3/4" FIRE/MOLD TREATED PLYWOOD (DRICON).

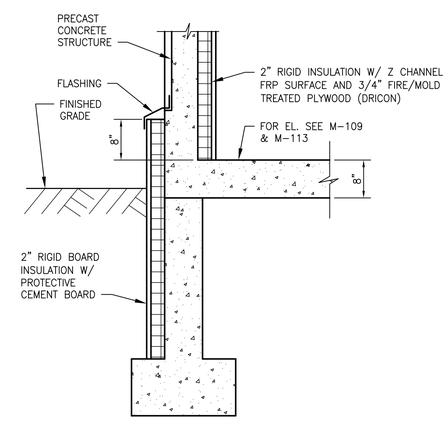

FOUNDATION/WALL INSULATION DETAIL
NOT TO SCALE

DRAFT FOR REVIEW

MARK	DATE	MADE BY	CHECKED	DESCRIPTION

REVISIONS

AECOM, INC.
500 NEWPORT CENTRE DRIVE
ROCKY HILL, CT 06067
PHONE (860) 263–3800

EPA CONTRACT NO. EP-S1-06-01
DURHAM MEADOWS WATERLINE RD
DURHAM AND MIDDLETOWN, CONNECTICUT
TASK ORDER NO. 0060-RD-RD-0105

CITY OF MIDDLETOWN

PRECAST STRUCTURES SPECS & DETAILS

STRUCTURAL

PROJECT NO:	60275749
CAD DWG FILE:	S–001
DESIGNED BY:	MEM
DRAWN BY:	MEM
DEPT CHECK:	AC
PROJ CHECK:	MWM
DATE:	APRIL 2018
SCALE:	AS NOTED

S-001

ANSI B – 6–Apr–18

INSTRUMENT TYPE IDENTIFICATION LETTERS

THIS TABLE APPLIES ONLY TO THE FUNCTIONAL IDENTIFICATION OF INSTRUMENTS

	FIRST LETTER		SUCCEEDING LETTERS		
	MEASURED OR INITIATING VARIABLE	MODIFIER	READOUT OR PASSIVE FUNCTION	OUTPUT FUNCTION	MODIFIER
A	ANALYSIS	ANALOG	ALARM		
B	BURNER FLAME		USER'S CHOICE	USER'S CHOICE	USER'S CHOICE
C	CONDUCTIVITY (ELECTRICAL)			CONTROL	
D	DENSITY (MASS) OR SPECIFIC GRAVITY	DIFFERENTIAL OR DIGITAL			
E	VOLTAGE (EMF)		PRIMARY ELEMENT		
F	FLOW RATE	RATIO (FRACTION)			
G	GAGING (DIMENSIONAL)		GLASS		
H	HAND (MANUALLY INITIATED)				HIGH
I	CURRENT (ELECTRICAL)		INDICATE OR INPUT		
J	POWER	SCAN			
K	TIME OR TIME SCHEDULE			CONTROL STATION	
L	LEVEL		LIGHT (PILOT)		LOW
M	MOISTURE OR HUMIDITY				MIDDLE OR INTERMEDIATE
N	USER'S CHOICE		USER'S CHOICE	USER'S CHOICE	USER'S CHOICE
O	USER'S CHOICE		ORIFICE (RESTRICTION)		
P	PRESSURE OR VACUUM		POINT (TEST CONNECTION)		
Q	QUANTITY OR EVENT	INTEGRATE OR TOTALIZE			
R	RADIOACTIVITY	RELIEF	RECORD OR PRINT		
S	SPEED OR FREQUENCY	SAFETY		SWITCH	
T	TEMPERATURE			TRANSMIT	
U	MULTIVARIABLE		MULTIFUNCTION	MULTIFUNCTION	MULTIFUNCTION
V	VIBRATION			VALVE, DAMPER OR LOUVER	
W	WEIGHT OR FORCE		WELL		
X	UNCLASSIFIED		UNCLASSIFIED	UNCLASSIFIED	UNCLASSIFIED
Y	USER'S CHOICE			RELAY OR COMPUTE	
Z	POSITION			DRIVE, ACTUATE OR UNCLASSIFIED FINAL CONTROL ELEMENT	

MISCELLANEOUS ABBREVIATIONS

I/P	CURRENT TO PNEUMATIC CONVERTER	GBT	GRAVITY BELT THICKENER
E/I	VOLTAGE TO CURRENT CONVERTER	DO	DISSOLVED OXYGEN
∑	ADD OR TOTALIZE	H2S	HYDROGEN SULFIDE
√	SQUARE ROOT	O2	OXYGEN
X	MULTIPLY	pH	HYDROGEN ION CONCENTRATION
÷	DIVIDE	LP	LOCAL PANEL
>	HIGH SELECT	VFD	VARIABLE FREQUENCY DRIVE
MV	MEASURED VARIABLE	△	DIFFERENCE
<	LOW SELECT	I/O	INPUT/OUTPUT
S.P.	SET POINT	ER	ELECTRICAL ROOM
PLC	PROGRAMMABLE LOGIC CONTROLLER	LEL	LOWER EXPLOSIVE LIMIT
f(x)	CHARACTERISTIC	DW	DEWATERING
P	PROPORTIONAL CONTROL MODE	OC	ODOR CONTROL
D	DERIVATIVE	WW	WASTE WATER
∫	INTEGRAL CONTROL MODE	MIL	MOTOR INDICATING LIGHT

SYMBOLS

HYDRAULIC CONTROL LINES
ELECTRIC INSTRUMENT LINES
PNEUMATIC SIGNAL
PROCESS FLOW – CHANNEL
PROCESS FLOW – PIPING
CAPILLARY TUBING
INTERNAL LINK SIGNAL
CONE CHECK VALVE
BALL VALVE
BALL CHECK VALVE
SWING CHECK VALVE
BUTTERFLY VALVE, DAMPER, OR LOUVER
PLUG VALVE
GATE VALVE
DIAPHRAGM VALVE
GLOBE VALVE
RESTRAINED FLEXIBLE COUPLING
FLOAT VALVE
3–WAY MIX VALVE
3–WAY DIVERTER VALVE
3–WAY SOLENOID VALVE
4–WAY MIX VALVE
4–WAY SOLENOID VALVE
ANGLE VALVE
SOLENOID VALVE
SELF–OPERATING BACK PRESSURE REGULATOR VALVE
SELF–OPERATING PRESSURE REGULATOR VALVE
PRESSURE REDUCING REGULATOR VALVE W/EXTERNAL PRESSURE TAP
PRESSURE RELIEF VALVE
VACUUM RELIEF VALVE
KNIFE GATE VALVE
PINCH VALVE
APERTURE VALVE
STOP LOG
SLIDE GATE
MULTI–BLADE DAMPER

ACCUMULATOR
AERATOR
BAR SCREEN
CALIBRATION STANDPIPE
CHEMICAL SEAL
IN LINE SEAL (NOTE 2)
CONCENTRIC REDUCER
DRAIN
DUPLEX FILTER
ECCENTRIC REDUCER
FLEXIBLE HOSE
GRINDER
LOAD CELL
MIXER
VERTICAL SHAFT MIXER
PULSATION DAMPENER
QUICK DISCONNECT
RADIO, ULTRASONIC, OR ACOUSTIC SIGNAL
RUPTURE DISC (PRESSURE RELIEF)
RUPTURE DISC (VACUUM RELIEF)
STRAINER
CONE CHECK VALVE
DOUBLE DISC CHECK VALVE
FLAME ARRESTOR
BATCH METER

DIFFUSER
STATIC MIXER
TANK VENT
UNION
WEIR
CYLINDER ACTUATOR
DIAPHRAGM ACTUATOR WITH POSITIONER
HAND OPERATOR
HYDRAULIC OPERATOR
MOTOR OPERATOR
PNEUMATIC OPERATOR
SOLENOID OPERATOR
TERMINAL STRIP IN LOCAL PANEL FOR INTERFACE WITH COMPUTER/MUX
FLOW RATE CONTROLLER
FLOW ELEMENT (VENTURI)
INSERT FLOW ELEMENT (VENTURI)
MAGNETIC FLOWMETER
ORIFICE PLATE
PARSHALL FLUME
ROTAMETER
ACOUSTIC OR DOPPLER INLINE FLOWMETER
"V" NOTCH WEIR
WEIR GATE

SEDIMENT & DRIP TRAP ASSEMBLY
HEAT EXCHANGER
BLOWER
SUBMERSIBLE CENTRIFUGAL PUMP
CENTRIFUGAL PUMP
CENTRIFUGE AND SLUDGE CAKE PUMP
DIAPHRAGM PUMP
HOSE PUMP
METERING PUMP
POSITIVE DISPLACEMENT BLOWER
VERTICAL TURBINE PUMP
PRESSURE PUMP
PROGRESSIVE CAVITY PUMP
ROTARY LOBE PUMP
VARIBLE INLET VANE DAMPER
INSERTION MASS FLOW METER
LIMITS OF WORK (TRADE, CONTRACT, ETC.)
POINT OF CONNECTION NEW WORK TO EXISTING WORK

GENERAL NOTES

1. WHEN "U" IS USED AS SUCCEEDING LETTER, IT MEANS THAT THE ANALOG INPUT SIGNAL NEEDS TO BE DISPLAYED, RECORDED, TOTALIZED (FOR FLOW) AND BE SET WITH HIGH, HIGH–HIGH, LOW, LOW–LOW LIMITS.
2. INSTRUMENT SUFFIX:

   NUMERIC SUFFIXES IDENTIFY INSTRUMENTS WITH DIFFERENT FUNCTIONS (E.G., A L/R AND A O/S/C SWITCH) ARE PRECEDED BY – (E.G., HS–102–1, AND HS–102–2)

   ALPHABETIC SUFFIXES IDENTIFY MULTIPLE OCCURRENCES OF INSTRUMENTS WITH THE SAME FUNCTION (E.G.,TWO L/R SWITCHES FOR DIFFERENT MOTORS IN SAME PANEL (E.G. HS–103–1A, HS–103–2A)

INSTRUMENT SYMBOLS

INSTRUMENT TYPE (SEE LEGEND TABLE)
FACILITY PREFIX
LOOP IDENTIFICATION NUMBER (SEE NOTE)
MODIFIER OR HAND SWITCH POSITION SYMBOL
PANEL NAME
SUPPLIER (IF OTHER THEN INSTRUMENT SUPPLIER)

FRONT PANEL MOUNTED
PANEL INDICATION
REAR PANEL MOUNTED
FIELD MOUNTED
FIELD INDICATION

PICS CONFIGURABLE FUNCTION, CRT DISPLAY OF ALARMS & STATUS
PICS CONFIGURATION FUNCTION, CRT DISPLAY OF CONTROL & INDICATION
PICS CONFIGURABLE FUNCTION, NOT DISPLAYED ON CRT
I — INTERLOCK
SP — SURGE PROTECTOR – SEE SPECIFICATION
REQUIRES 120 VAC POWER SUPPLY FROM ASSOCIATED CONTROL PANEL

100 / 101 — SPECIFIC LOOP NUMBER; DUPLICATE LOOP IDENTIFICATION SYMBOL; REFERENCE LOOP NUMBER
120 / 121 — SPECIFIC LOOP NUMBER; DUPLICATE LOOP IDENTIFICATION SYMBOL; REFERENCE LOOP NUMBER

SUPPLIERS

ALL INSTRUMENTS ARE SPECIFIED BY DIVISION 13, INSTRUMENTATION UNLESS INDICATED BY;

(E) ELECTRICAL
(X) EXISTING
(M) MECHANICAL
(H) HVAC
(F) FURNISHED WITH EQUIPMENT
(P) PLUMBING

CONTRACTOR SHALL PROVIDE ALL INSTRUMENTS AS SPECIFIED ON DATA SHEETS ATTACHED TO SPECIFICATION SECTION 13300

PLC OR DCS INPUT/OUTPUT SYMBOLS

ANALOG INPUT
DISCRETE INPUT
ANALOG OUTPUT
DISCRETE OUTPUT

HAND SWITCH POSITION SYMBOLS

(UNLABELLED SWITCHES ARE TO BE ON–OFF)

A	AUTOMATIC	M	MANUAL	SBY	STANDBY
C	CLOSE	O	OPEN OR OFF	F/R	FORWARD/REVERSE
F	FAST OR FORWARD	R	RUN OR REMOTE	L/R	LOCAL/REMOTE
H	HAND	S/S/C	START/STOP/CLEAR	HOR	HAND–OFF–REMOTE
J	JOG	E/S	EMERGENCY STOP	HOA	HAND–OFF–AUTO
L	LOCAL			P/M/A	PUMPING–MIXING–AUTO

MARK	DATE	MADE BY/ CHECKED	DESCRIPTION

100% SUBMITTAL

REVISIONS

AECOM, INC.
500 ENTERPRISE DRIVE
ROCKY HILL, CT 06067
PHONE (860) 493-0500

STATE OF CONNECTICUT — REGISTERED PROFESSIONAL ENGINEER — No. 27954

EPA CONTRACT NO. EP-S1-06-01
DURHAM MEADOWS WATERLINE RD
DURHAM AND MIDDLETOWN, CONNECTICUT
TASK ORDER NO. 0060-RD-A-01D5

LEGEND, ABBREVIATIONS AND NOTES

INSTRUMENTATION

PROJECT NO:	60275749
CAD DWG FILE:	DI–1
DESIGNED BY:	AA
DRAWN BY:	AA
DEPT CHECK:	YR
PROJ CHECK:	MWM
DATE:	APRIL 2018
SCALE:	

DI-1

ANSI D – 9–Apr–18

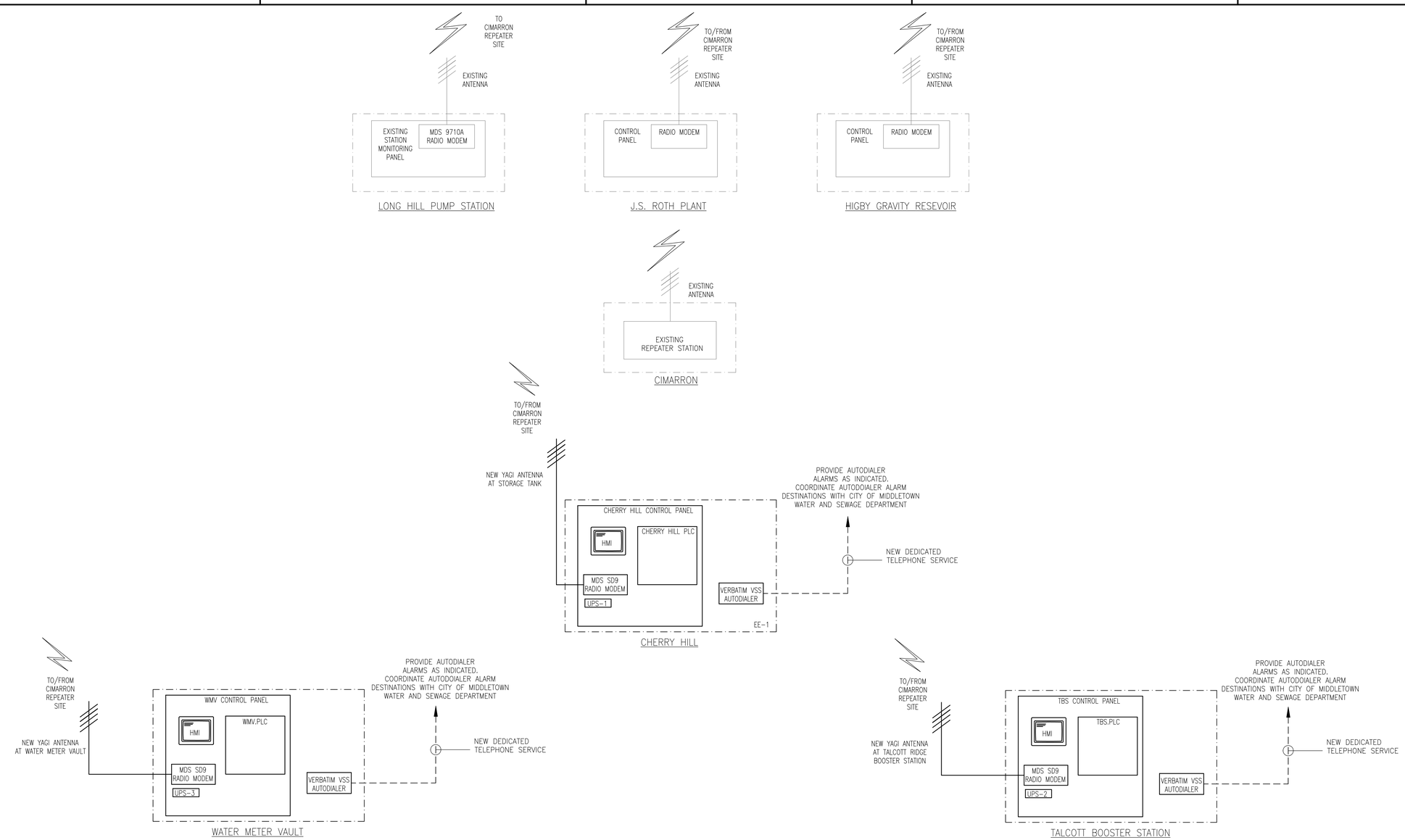

NOTES:

1. REFER TO ELECTRICAL AND MECHANICAL DRAWINGS FOR EQUIPMENT LOCATIONS.
2. ANTENNAS SHALL BE LOCATED AS REQUIRED BY THE RADIO PATH STUDY.

SYSTEM ARCHITECTURE

SCALE: NOT TO SCALE

MARK	DATE	MADE BY / CHECKED	DESCRIPTION
			100% SUBMITTAL

REVISIONS

AECOM, INC.
500 ENTERPRISE DRIVE
ROCKY HILL, CT 06067
PHONE (860) 1-800-2000

EPA CONTRACT NO. EP-S1-06-01
DURHAM MEADOWS WATERLINE RD
DURHAM AND MIDDLETOWN, CONNECTICUT
TASK ORDER NO. 0060-RD-RD-0105

SYSTEM ARCHITECTURE

INSTRUMENTATION

PROJECT NO:	60275749
CAD DWG FILE:	DI-2
DESIGNED BY:	AA
DRAWN BY:	JD
DEPT CHECK:	YR
PROJ CHECK:	MWM
DATE:	APRIL 2018
SCALE:	

DI-2

ANSI D – 3-Nov-17

1. LONG HILL STATION MONITORING CONTROL PANEL

PROVIDE THE REQUIRED HARDWARE AND PROGRAMMING FOR THE FOLLOWING THE MODIFICATIONS TO THE EXISTING STATION MONITORING PANEL LOCATED AT THE LONG HILL PUMP STATION.

A. RADIO TRANSMISSION

THE STATION MONITORING CONTROL PANEL SHALL BE MODIFIED TO RECEIVE THE FOLLOWING RADIO SIGNALS FROM THE CHERRY HILL PLC:

1. ALTITUDE VALVE VAULT INTRUSION ALARM (XA-101)
2. ALTITUDE VALVE VAULT LOW TEMPERATURE (TAL-102)
3. ALTITUDE VALVE POSITION (ZI-201)
4. SUMP HIGH-HIGH ALARM (LSHH-103)
5. STORAGE TANK LEVEL (PIT-201A)
6. STORAGE TANK LEVEL (PIT-201B)
7. LOSS OF UTILITY POWER (JA-410)
8. UPS 1 FAULT (JAL-500)
9. UPS 1 LOW BATTERY (XA-501)
10. RECIRCULATION PUMP CHRP-1 RUNNING (MIL-300)
11. RECIRCULATION PUMP CHRP-1 FAULT (XA-300)
12. TANK MIXER MIX-1 RUNNING (MIL-310)
13. TANK MIXER MIX-1 FAULT (XA-310)
14. SPRAY NOZZLE PUMP SN.P-1 RUNNING (MIL-320)
15. SPRAY NOZZLE PUMP SN.P-1 FAULT (XA-320)
16. BLOWER BLW-1 RUNNING (MIL-330)
17. BLOWER BLW-1 FAULT (XA-330)

- IN THE EVENT RADIO SIGNAL FROM CHERRY HILL IS UNDETECTED FOR 1 HOUR (ADJUSTABLE) GENERATE A COMMUNICATION FAILURE ALARM IN SCADA. EXISTING AUTO DIALER (AT THE LONG HILL PUMP STATION) SHALL BE PROGRAMMED TO INDICATE CHERRY HILL STORAGE TANK COMMUNICATION FAILURE.

B. AUTODIALER

THE EXISTING AUTODIALER AT THE LONG HILL PUMP STATION AND THE STATION MONITORING PANEL SHALL BE MODIFIED TO PROVIDE REMOTE INDICATION OF THE FOLLOWING SIGNALS:

1. SIGNALS FROM CHERRY HILL PLC AS OUTLINE ABOVE IN 1(A) RADIO TRANSMISSION, #1-17
2. HIGH CAPACITY PUMP P1-VFD FAULT (XA-401)
3. HIGH CAPACITY PUMP P2-VFD FAULT (XA-402)
4. CL SYSTEM FAULT (XA-410)
5. CL BOOSTER PUMP CL.P-1 FAULT (XA-411)
6. CL BOOSTER PUMP CL.P-2 FAULT (XA-412)
7. CL TANK HIGH LEVEL (LAH-410)
8. CL TANK LOW LEVEL (LAL-410)

C. HIGH CAPACITY PUMP OPERATION (P1, P2)

1. LOW PRESSURE (EXISTING PRESSURE SWITCH PS.1)

   1.1. THE EXISTING LOW PRESSURE CONTACT THAT IS TERMINATED AT THE HIGH CAPACITY PUMP CONTROL PANEL SHALL BE DISCONNECTED AND EXTENDED TO THE STATION MONITORING CONTROL PANEL.

   1.2. IN THE EVENT THAT PRESSURE SIGNALS FROM THE CHERRY HILL STORAGE TANK (PU-201A/PU-201B) ARE UNAVAILABLE FOR GREATER THAN 1 HOUR (ADJUSTABLE) THE PUMPS SHALL OPERATE BASED ON PS.1 EXISTING SETPOINTS.

   1.3. THE STATION MONITORING CONTROL PANEL SHALL ALLOW MANUAL SELECTION OF PUMP OPERATION BASED ON EITHER PS.1 OR PU-201A/201B.

2. LOW PRESSURE (PAL-201A/PAL-201B) – LOW TANK LEVEL

   2.1. AT TANK 86% FULL (502 FT.) (ADJUSTABLE) START PUMP P-1 AND RUN CONTINUOUSLY UNTIL TANK REACHES 100% FULL (ADJUSTABLE).

   2.2. IF PUMP P-1 HAS RUN FOR 1 HOUR (ADJUSTABLE) AND TANK LEVEL HAS NOT INCREASED, START PUMP P-2.

   2.3. IF PUMPS P-1 AND P-2 HAVE RUN FOR 1 HOUR (ADJUSTABLE) AND TANK LEVEL HAS NOT INCREASED BY A MINIMUM OF 5 FEET (ADJUSTABLE) GENERATE "CHERRY HILL TANK FILL FAILURE" ALARM IN SCADA.

   2.4. AT TANK LEVEL 462 FT. GENERATE (ADJUSTABLE) "CHERRY HILL TANK LOW LEVEL" ALARM IN SCADA.

3. HIGH PRESSURE (PAH-201A/PAH-201B) – HIGH TANK LEVEL

   3.1. AT TANK 100% FULL (512 FT.) (ADJUSTABLE) STOP PUMP.

   3.2. AT TANK OVERFLOW (514 FT.) (ADJUSTABLE) GENERATE "CHERRY HILL TANK OVERFLOW" ALARM IN SCADA.

4. ALTITUDE VALVE POSITION (ZI-200)

   4.1. THE ALTITUDE VALVE IS MECHANICALLY OPERATED, ALLOWING WATER TO FLOW INTO THE CHERRY HILL STORAGE TANK BASED ON SENSED PRESSURE. VALVE IS MECHANICALLY SELF CLOSING AT HIGH PRESSURE SET POINT (TANK FULL).

   4.2. VALVE POSITION SWITCH SHALL PROVIDE A DISCRETE INPUT TO THE CHERRY HILL TANK PLC.

   4.3. HIGH CAPACITY PUMPS P-1 AND P-2 SHALL NOT RUN WHILE THE ALTITUDE VALVE IS IN THE CLOSED POSITION.

D. CHLORINE SYSTEM

THE STATION MONITORING PANEL SHALL BE MODIFIED TO ACCEPT SIGNALS FROM AND PROVIDE OUTPUTS TO THE CHLORINE SYSTEM AS INDICATED BELOW AND SHOWN ON THE CONTRACT DRAWINGS.

1. CHLORINE SYSTEM CONTROL PANEL (CL-CP)

   1.1. THE CHLORINE SYSTEM CONTROL PANEL SHALL BE PROVIDED AS PRE-WIRED AND INTEGRAL TO THE FACTORY ASSMEBLED CHLORINE SYSTEM SKID. ALL CHLORINE SYSTEM DEVICES SHALL BE CONTROLLED BY AND PRE-WIRED TO THE CHLORINE SYSTEM CONTROL PANEL. PROCESSES FOR ALL EQUIPMENT AT THE CHLORINE SYSTEM SKID ARE CONTROLLED BY CL-CP, AND PROGRAMMED BY THE VENDOR. CL-CP SHALL SHARE INFORMATION AND ACCEPT SIGNALS FROM STATION MONITORING PANEL AS SHOWN ON THE CONTRACT DRAWINGS.

   1.2. THE FOLLOWING SIGNALS FROM THE CHLORINE SYSTEM CONTROL PANEL (CL-CP) SHALL BE TRANSMITTED TO THE STATION MONITORING PANEL:

   1.2.1. CL SYSTEM FAULT (XA-410)
   1.2.2. CL BOOSTER PUMP CL.P-1 RUN STATUS (MIL-411)
   1.2.3. CL BOOSTER PUMP CL.P-2 RUN STATUS (MIL-412)
   1.2.4. CL BOOSTER PUMP CL.P-1 FAULT (XA-411)
   1.2.5. CL BOOSTER PUMP CL.P-2 FAULT (XA-412)
   1.2.6. CL BOOSTER PUMP CL.P-1 ESTOP (XA-411)
   1.2.7. CL BOOSTER PUMP CL.P-2 ESTOP (XA-412)
   1.2.8. CL BOOSTER PUMP CL.P-1 NOT IN AUTO (NIA-411)
   1.2.9. CL BOOSTER PUMP CL.P-2 NOT IN AUTO (NIA-412)
   1.2.10. CL TANK HIGH LEVEL (LAH-410)
   1.2.11. CL TANK LOW LEVEL (LAL-410)

D. CHLORINE SYSTEM (CONTINUED)

2. SYSTEM FLOW (FE/FIT-440)

   2.1. WATER FLOW FROM LONG HILL PUMP STATION TO THE WATER DISTRIBUTION SYSTEM (FE/FIT-440) IS MEASURED WITH AN EXISTING 8" MAGNETIC FLOW METER. THE SIGNAL FROM THE EXISTING TRANSMITTER WILL BE INPUTTED TO THE STATION MONITORING PANEL.

   2.2. THE STATION MONITORING PANEL WILL PROVIDE SYSTEM FLOW OUTPUT (FE/FIT-440) TO THE CHLORINE SYSTEM CONTROL PANEL.

2. CHERRY HILL PLC

A. TEMPERATURE TRANSMITTER TE/TT-102

1. LOW TEMPERATURE (TAL-102): WHEN VALVE VAULT TEMPERATURE REACHES 50 F AN ALARM SHALL BE GENERATED AT THE PLC FOR "VALVE VAULT LOW TEMPERATURE"

B. RECIRCULATION PUMP CHRP.-1

1. IN AUTO THE RECIRCULATION PUMP SHALL CYCLE BETWEEN RUNNING FOR 120 MINUTES (ADJUSTABLE) AND THEN STOP FOR 120 MINUTES (ADJUSTABLE).

2. IN AUTO THE RECIRCULATION PUMP SHALL BE CAPABLE OF REMOTE START/STOP.

C. TANK MIXER MIX-1

1. IN AUTO THE TANK MIXER SHALL RUN CONTINUOUSLY AND BE CAPABLE OF REMOTE START/STOP.

D. SPRAY NOZZLE PUMP SN.P-1

1. IN AUTO THE SPRAY NOZZLE PUMP SHALL RUN CONTINUOUSLY AND BE CAPABLE OF REMOTE START/STOP.

E. BLOWER BLW-1

1. IN AUTO THE BLOWER SHALL RUN CONTINUOUSLY AND BE CAPABLE OF REMOTE START/STOP.

F. AUTODIALER

THE CHERRY HILL PLC SHALL GENERATE THE FOLLOWING AUTODIALER SIGNALS:

1. ALTITUDE VALVE VAULT INTRUSION ALARM (XA-101)
2. ALTITUDE VALVE VAULT LOW TEMPERATURE (TAL-102)
3. SUMP HIGH ALARM (LSH-103)
4. LOW PRESSURE ALARM (PAL-201A/PAL-201B)
5. HIGH PRESSURE ALARM (PAH-201A/PAH-201B)
6. STORAGE TANK LEVEL ALARM (LAL-201A/LAH-201A)
7. STORAGE TANK LEVEL ALARM (LAL-201B/LAH-201B)
8. LOSS OF UTILITY POWER (JA-410)
9. UPS 1 FAULT (JAL-500)
10. UPS 1 LOW BATTERY (XA-501)
11. RECIRCULATION PUMP CHRP-1 FAULT (XA-300)
12. TANK MIXER MIX-1 FAULT (XA-310)
13. SPRAY NOZZLE PUMP SN.P-1 FAULT (XA-320)
14. BLOWER BLW-1 FAULT (XA-330)

- AUTODIALER SIGNALS SHALL BE SENT TO NUMBERS AS INDICATED BY THE CITY OF MIDDLETOWN WATER AND SEWER DEPARTMENT. COORDINATE AUTODIALER SIGNALS WITH THE CITY OF MIDDLETOWN.

G. RADIO TRANSMISSION

1. THE CHERRY HILL PLC SHALL TRANSMIT THE SIGNALS OUTLINED IN 1(A) #1-17, TO THE STATION MONITORING CONTROL PANEL LOCATED AT THE LONG HILL PUMP STATION.

2. THE CHERRY HILL PLC SHALL TRANSMIT AND RECEIVE THE FOLLOWING SIGNALS TO THE ROTH AND HIGBY SCADA CONTROL PANELS:

   2.1. ALTITUDE VALVE VAULT INTRUSION ALARM (XA-101)
   2.2. ALTITUDE VALVE VAULT LOW TEMPERATURE (TAL-102)
   2.3. ALTITUDE VALVE POSITION (ZI-201)
   2.4. SUMP HIGH-HIGH ALARM (LSHH-103)
   2.5. STORAGE TANK LEVEL (LU-201A)
   2.6. STORAGE TANK LEVEL (LU-201B)
   2.7. LOSS OF UTILITY POWER (JA-410)
   2.8. UPS 1 FAULT (JAL-500)
   2.9. UPS 1 LOW BATTERY (XA-501)
   2.10. RECIRCULATION PUMP CHRP-1 RUNNING (MIL-300)
   2.11. RECIRCULATION PUMP CHRP-1 FAULT (XA-300)
   2.12. RECIRCULATION PUMP CHRP-1 RUN (HS-300)
   2.13. RECIRCULATION PUMP CHRP-1 NOT IN AUTO (NIA-310)
   2.14. TANK MIXER MIX-1 RUNNING (MIL-310)
   2.15. TANK MIXER MIX-1 FAULT (XA-310)
   2.16. TANK MIXER MIX-1 RUN (HS-310)
   2.17. TANK MIXER MIX-1 NOT IN AUTO (NIA-310)
   2.18. SPRAY NOZZLE PUMP SN.P-1 RUNNING (MIL-320)
   2.19. SPRAY NOZZLE PUMP SN.P-1 FAULT (XA-320)
   2.20. SPRAY NOZZLE PUMP SN.P-1 RUN (HS-320)
   2.21. SPRAY NOZZLE PUMP SN.P-1 NOT IN AUTO (NIA-330)
   2.22. BLOWER BLW-1 RUNNING (MIL-330)
   2.23. BLOWER BLW-1 FAULT (XA-330)
   2.24. BLOWER BLW-1 RUN
   2.25. BLOWER BLW-1 NOT IN AUTO (NIA-330)

3. J.S. ROTH PLANT AND HIGBY GRAVITY RESEVOIR

A. RADIO TRANSMISSION

1.1. THE EXISTING CONTROL PANELS AT THE ROTH AND HIGBY SITES SHALL BE MODIFIED TO ACCEPT THE SIGNALS FROM THE CHERRY HILL TANK OUTLINED IN 2(G), 2.1– 2.25 INCLUDING ALL REQUIRED HARDWARE AND PROGRAMMING. PROVIDE EXISTING CONTROL PANELS WITH LOCAL DISPLAYS.

1.2. MODIFY EXISTING CONTROL PANELS FOR MODIFICATIONS TO THE SCADA SYSTEM AT THE LONG HILL PUMP STATION AS OUTLINED IN 1(A) – 1(D) INCLUDING ALL REQUIRED HARDWARE AND PROGRAMMING.

1.3 THE EXISTING CONTROL PANELS AT THE ROTH AND HIGBY SITES SHALL BE MODIFIED TO ACCEPT THE SIGNALS FROM THE TALCOTT RIDGE BOOSTER STATION OUTLINED IN 4.(F), 1.1–1.24 INCLUDING ALL REQUIRED HARDWARE AND PROGRAMMING. PROVIDE EXISTING CONTROL PANELS WITH LOCAL DISPLAYS.

1.4 THE EXISTING CONTROL PANELS AT THE ROTH AND HIGBY SITES SHALL BE MODIFIED TO ACCEPT THE SIGNALS FROM THE WATER METER VAULT OUTLINED IN 5(D), 1.1–1.9 INCLUDING ALL REQUIRED HARDWARE AND PROGRAMMING. PROVIDE EXISTING CONTROL PANELS WITH LOCAL DISPLAYS.

4. TALCOTT RIDGE BOOSTER STATION (TBS) PLC/CP

A. TEMPERATURE TRANSMITTER TE/TT-600

1. LOW TEMPERATURE (TAL-600): WHEN THE TALCOTT RIDGE BOOSTER STATION TEMPERATURE REACHES 50 F (ADJUSTABLE) AN ALARM SHALL BE GENERATED AT THE PLC FOR "TBS LOW TEMPERATURE".

2. HIGH TEMPERATURE (TAH-600): WHEN TALCOTT RIDGE BOOSTER STATION TEMPERATURE REACHES 100 F (ADJUSTABLE) AN ALARM SHALL BE GENERATED AT THE PLC FOR "TBS HIGH TEMPERATURE".

B. PRESSURE TRANSMITTERS PIT-600A & PIT-600B

1. LOW SUCTION PRESSURE (PAL-600A): A LOW PRESSURE ALARM SHALL BE GENERATED AT 15 PSI.

2. LOW DISCHARGE PRESSURE (PAL-600B): A LOW PRESSURE ALARM SHALL BE GENERATED AT 70 PSI.

C. FLOW TRANSMITTER FE/FIT-604

1. WATER FLOW FROM THE TALCOTT RIDGE BOOSTER STATION TO THE WATER DISTRIBUTION SYSTEM IS MEASURED WITH A 4" MAGNETIC FLOW METER. THE SIGNAL FROM THE TRANSMITTER WILL BE INPUTTED TO TBS.PLC.

2. A TOTALIZED FLOW READING SHALL BE CALCULATED AT TBS.PLC, RECORDED, AND RESET DAILY.

D. TALCOTT RIDGE BOOSTER STATION PUMP TBS-1, TBS-2

1. IN AUTOMATIC MODE, THE SYSTEM SHALL ACTIVATE THE SERVICE PUMP (TBS-1 OR TBS-2) WHEN THE PRESSURE SENSOR AT THE DISCHARGE HEADER (PT-600B) MEASURES 80 PSI OR LOWER.

2. ONCE THE SERVICE PUMP IS ACTIVATED, THE SYSTEM SHALL MAINTAIN DISCHARGE HEADER PRESSURE AT A SETPOINT OF 100 PSI (PT-600B).

3. THE SERVICE PUMP (TBS-1 OR TBS-2) SHALL SHUTDOWN WHEN THE PRESSURE SENSOR ON THE DISCHARGE HEADER (PT-600B) EXCEEDS 100 PSI FOR A SET AMOUNT OF TIME OR THE FLOW RATE (FIT-604) IS LESS THAN 12 GPM.

4. SUBSEQUENT TO THE SERVICE PUMP SHUTDOWN, THE SERVICE PUMP SHALL SWITCH TO THE STANDBY SERVICE PUMP FOR THE NEXT PUMP START (TBS-2 OR TBS-1).

E. AUTODIALER

THE TALCOTT RIDGE BOOSTER STATION PLC SHALL GENERATE THE FOLLOWING AUTODIALER SIGNALS:

1. LOW SUCTION PRESSURE (PAL-600A)
2. LOW DISCHARGE PRESSURE (PAL-600B)
3. LOW TEMPERATURE (TAL-600)
4. HIGH TEMPERATURE (TAH-600)
5. INTRUSION ALARM (XA-600)
6. SUMP HIGH LEVEL ALARM (LAH-600)
7. LOSS OF UTILITY POWER (JA-610B)
9. GENERATOR RUNNING (YIR-610)
10. GENERATOR FAULT (YA-610)
11. UPS-2 FAULT (XA-610)
12. UPS-2 LOW BATTERY (JAL-610)

- AUTODIALER SIGNALS SHALL BE SENT TO NUMBERS AS INDICATED BY THE CITY OF MIDDLETOWN WATER AND SEWER DEPARTMENT. COORDINATE AUTODIALER SIGNALS WITH THE CITY OF MIDDLETOWN.

F. RADIO TRANSMISSION

1. THE TALCOTT RIDGE BOOSTER STATION PLC SHALL TRANSMIT AND RECEIVE THE FOLLOWING SIGNALS TO THE ROTH AND HIGBY SCADA CONTROL PANELS:

   1.1. FLOW RATE (FI-604)
   1.2. TOTALIZED FLOW (FI-604)
   1.3. SUCTION PRESSURE INDICATION (PI-600A)
   1.4. DISCHARGE PRESSURE INDICATION (PI-600B)
   1.5. LOW SUCTION PRESSURE ALARM (PAL-600A)
   1.6. LOW DISCHARGE PRESSURE ALARM (PAL-600B)
   1.7. TBS-1 PUMP RUNNING (MIL-601)
   1.8. TBS-1 PUMP ESTOP (HS-601)
   1.9. TBS-1 NOT IN AUTO (NIA-601)
   1.10. TBS-1 VFD SPEED (SI-601)
   1.11. TBS-1 VFD FAULT (XA-601)
   1.12. TBS-2 PUMP RUNNING (MIL-602)
   1.13. TBS-2 PUMP ESTOP (HS-602)
   1.14. TBS-2 NOT IN AUTO (NIA-602)
   1.15. TBS-2 VFD SPEED (SI-602)
   1.16. TBS-2 VFD FAULT (XA-602)
   1.17. TBS LOW TEMPERATURE (TAL-600)
   1.18. TBS HIGH TEMPERATURE (TAH-600)
   1.19. INTRUSION ALARM (XA-600)
   1.20. SUMP HIGH LEVEL ALARM (LAH-600)
   1.21. LOSS OF UTILITY POWER (JA-610B)
   1.22. GENERATOR RUNNING (YIR-610)
   1.23. GENERATOR FAULT (YA-610)
   1.24. UPS-2 FAULT (XA-610)
   1.25. UPS-2 LOW BATTERY (JAL-610)

5. WATER METER VAULT PLC/CP

A. TEMPERATURE TRANSMITTER TE/TT-700

1. LOW TEMPERATURE (TAL-700): WHEN THE WATER METER VAULT TEMPERATURE REACHES 50 F (ADJUSTABLE) AN ALARM SHALL BE GENERATED AT THE PLC FOR "WATER METER VAULT LOW TEMPERATURE".

2. HIGH TEMPERATURE (TAH-700): WHEN WATER METER VAULT TEMPERATURE REACHES 100 F (ADJUSTABLE) AN ALARM SHALL BE GENERATED AT THE PLC FOR "WATER METER VAULT HIGH TEMPERATURE".

B. FLOW TRANSMITTERS FIT-701A & FIT-701B

1. AT FLOW RATES OF 0-60 GPM, FIT-701A PROVIDES FLOW READING THROUGH WATER METER 2" BYPASS.

2. HIGH FLOW RATE ALARM (FIT-701A): WHEN THE FLOW METER READS 75 GPM AN ALARM SHALL BE GENERATED AT THE PLC FOR "2" FLOW METER HIGH FLOW".

3. AT FLOW RATES GREATER THAN 60 GPM, FI7701B PROVIDES FLOW READING THROUGH 10" WATER METER.

4. HIGH FLOW RATE ALARM (FIT-701B): WHEN THE FLOW METER READS 2200 GPM AN ALARM SHALL BE GENERATED AT THE PLC FOR "10" FLOW METER HIGH FLOW".

5. A TOTALIZED FLOW READING SHALL BE CALCULATED AT WMV.PLC, RECORDED, AND RESET DAILY.

C. AUTODIALER

THE WATER METER VAULT PLC SHALL GENERATE THE FOLLOWING AUTODIALER SIGNALS:

1. HIGH FLOW ALARM (FAH-701A)
2. HIGH FLOW ALARM (FAH-701B)
3. VAULT LOW TEMPERATURE (TAL-700)
4. VAULT HIGH TEMPERATURE (TAH-700)
5. VAULT INTRUSION ALARM (XA-700)
6. SUMP HIGH LEVEL ALARM (LAH-700)
7. LOSS OF UTILITY POWER (JA-710B)
8. UPS-3 FAULT (XA-710)
9. UPS-3 LOW BATTERY (JAL-710)

- AUTODIALER SIGNALS SHALL BE SENT TO NUMBERS AS INDICATED BY THE CITY OF MIDDLETOWN WATER AND SEWER DEPARTMENT. COORDINATE AUTODIALER SIGNALS WITH THE CITY OF MIDDLETOWN.

D. RADIO TRANSMISSION

1. THE WATER METER VAULT PLC SHALL TRANSMIT AND RECEIVE THE FOLLOWING SIGNALS TO THE ROTH AND HIGBY SCADA CONTROL PANELS:

   1.1. FLOW RATE (FI-701A)
   1.2. FLOW RATE (FI-701B)
   1.3. HIGH FLOW ALARM (FAH-701A)
   1.4. HIGH FLOW ALARM (FAH-701B)
   1.5. TOTALIZED FLOW (FI-701A)
   1.6. TOTALIZED FLOW (FI-701B)
   1.7. VAULT LOW TEMPERATURE (TAL-700)
   1.8. VAULT HIGH TEMPERATURE (TAH-700)
   1.9. VAULT INTRUSION ALARM (XA-700)
   1.10. SUMP HIGH LEVEL ALARM (LAH-700)
   1.11. LOSS OF UTILITY POWER (JA-710B)
   1.12. UPS-3 FAULT (XA-710)
   1.13. UPS-3 LOW BATTERY (JAL-710)

LOOP DESCRIPTIONS

SCALE: NOT TO SCALE

100% SUBMITTAL

MARK	DATE	MADE BY	CHECKED	DESCRIPTION

REVISIONS

AECOM, INC.
500 ENTERPRISE DRIVE
ROCKY HILL, CT 06067
PHONE (860) 493-0900

STATE OF CONNECTICUT No. 27954 PROFESSIONAL ENGINEER

EPA CONTRACT NO. EP-S1-06-01
DURHAM MEADOWS WATERLINE RD.
DURHAM AND MIDDLETOWN, CONNECTICUT
TASK ORDER NO. 0060-RD-RD-01D5

LOOP DESCRIPTIONS

INSTRUMENTATION

PROJECT NO:	60275749
CAD DWG FILE:	DI-3
DESIGNED BY:	AA
DRAWN BY:	AA
DEPT CHECK:	YR
PROJ CHECK:	MWM
DATE:	APRIL 2018
SCALE:	

DI-3

ANSI D – 9-Apr-18

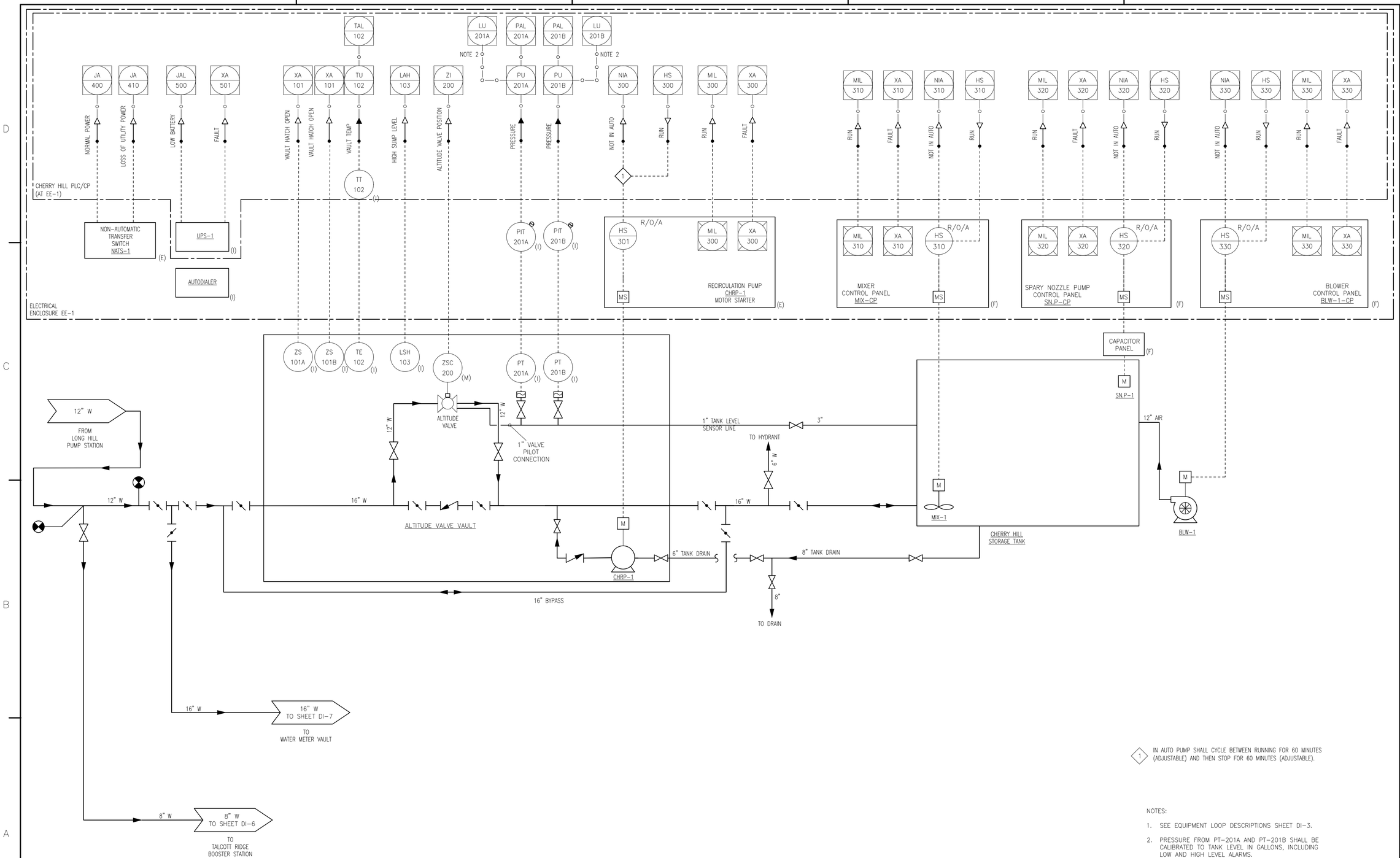

1 IN AUTO PUMP SHALL CYCLE BETWEEN RUNNING FOR 60 MINUTES (ADJUSTABLE) AND THEN STOP FOR 60 MINUTES (ADJUSTABLE).

NOTES:

1. SEE EQUIPMENT LOOP DESCRIPTIONS SHEET DI-3.
2. PRESSURE FROM PT-201A AND PT-201B SHALL BE CALIBRATED TO TANK LEVEL IN GALLONS, INCLUDING LOW AND HIGH LEVEL ALARMS.

100% SUBMITTAL

MARK	DATE	MADE BY/ CHECKED	DESCRIPTION

REVISIONS

AECOM
AECOM, INC.
500 ENTERPRISE DRIVE
ROCKY HILL, CT 06067
PHONE (860) 493-0900

STATE OF CONNECTICUT PROFESSIONAL ENGINEER No.27954

EPA CONTRACT NO. EP-S1-06-01
DURHAM MEADOWS WATERLINE RD
DURHAM AND MIDDLETOWN, CONNECTICUT
TASK ORDER NO. 0060-RD-RD-01D5

CHERRY HILL TANK AND ALTITUDE VAULT

INSTRUMENTATION

PROJECT NO:	60275749
CAD DWG FILE:	DI-4
DESIGNED BY:	AA
DRAWN BY:	AA
DEPT CHECK:	YR
PROJ CHECK:	MWM
DATE:	APRIL 2018
SCALE:	

DI-4

ANSI D - 22-Jan-18

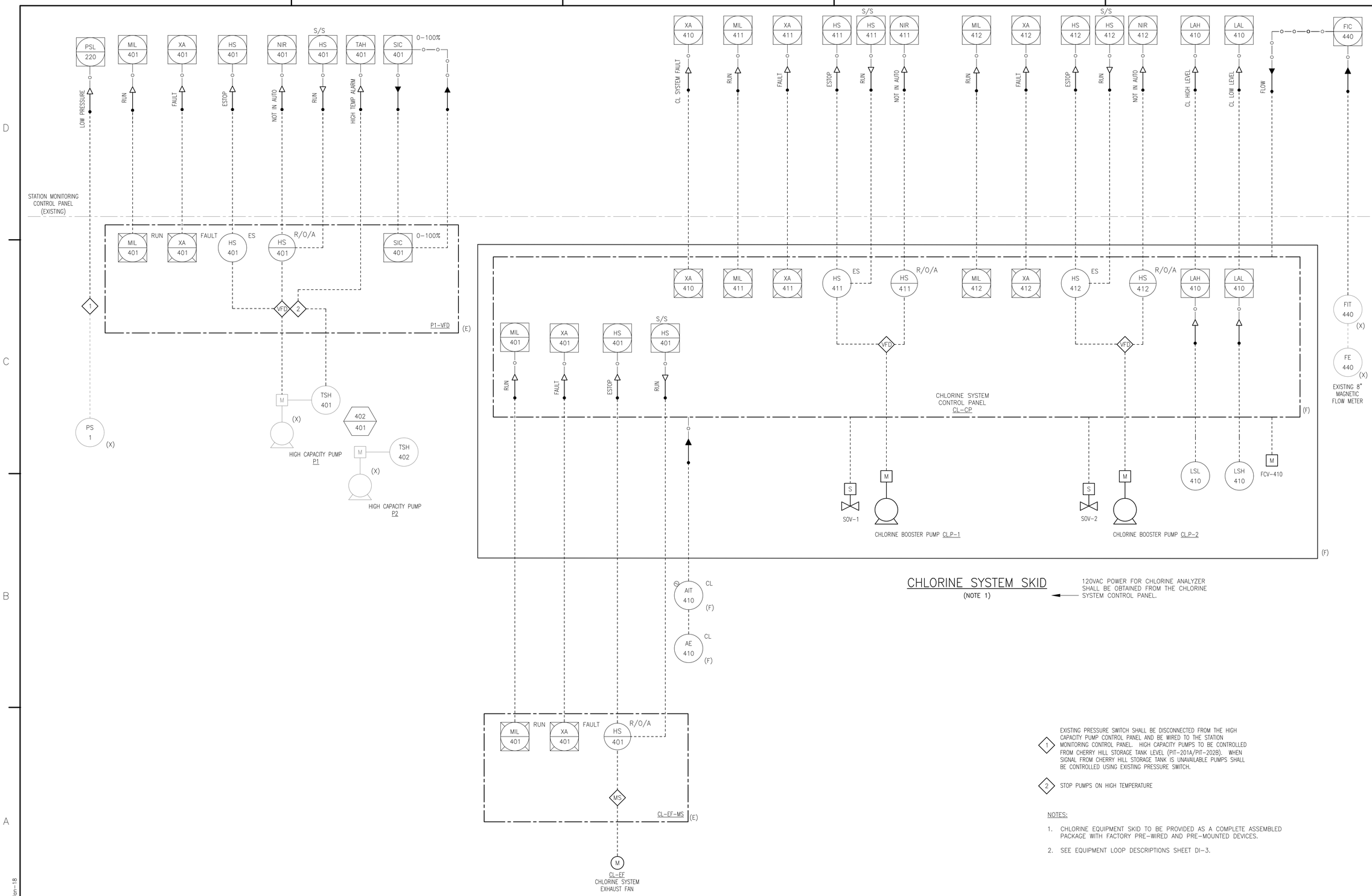

1 EXISTING PRESSURE SWITCH SHALL BE DISCONNECTED FROM THE HIGH CAPACITY PUMP CONTROL PANEL AND BE WIRED TO THE STATION MONITORING CONTROL PANEL. HIGH CAPACITY PUMPS TO BE CONTROLLED FROM CHERRY HILL STORAGE TANK LEVEL (PIT–201A/PIT–202B). WHEN SIGNAL FROM CHERRY HILL STORAGE TANK IS UNAVAILABLE PUMPS SHALL BE CONTROLLED USING EXISTING PRESSURE SWITCH.

2 STOP PUMPS ON HIGH TEMPERATURE

NOTES:

1. CHLORINE EQUIPMENT SKID TO BE PROVIDED AS A COMPLETE ASSEMBLED PACKAGE WITH FACTORY PRE–WIRED AND PRE–MOUNTED DEVICES.
2. SEE EQUIPMENT LOOP DESCRIPTIONS SHEET DI–3.

100% SUBMITTAL

MARK	DATE	MADE BY	CHECKED	DESCRIPTION

REVISIONS

AECOM, LLC
500 ENTERPRISE DRIVE
ROCKY HILL, CT 06067
PHONE (860) 263-3500

EPA CONTRACT NO. EP-S1-06-01
DURHAM MEADOWS WATERLINE RD
DURHAM AND MIDDLETOWN, CONNECTICUT
TASK ORDER NO. 0060-RD-01D5

LONG HILL PUMP STATION

INSTRUMENTATION

PROJECT NO:	60275749
CAD DWG FILE:	DI–5
DESIGNED BY:	AA
DRAWN BY:	AA
DEPT CHECK:	YR
PROJ CHECK:	MWM
DATE:	APRIL 2018
SCALE:	

DI-5

ANSI D – 22–Jan–18

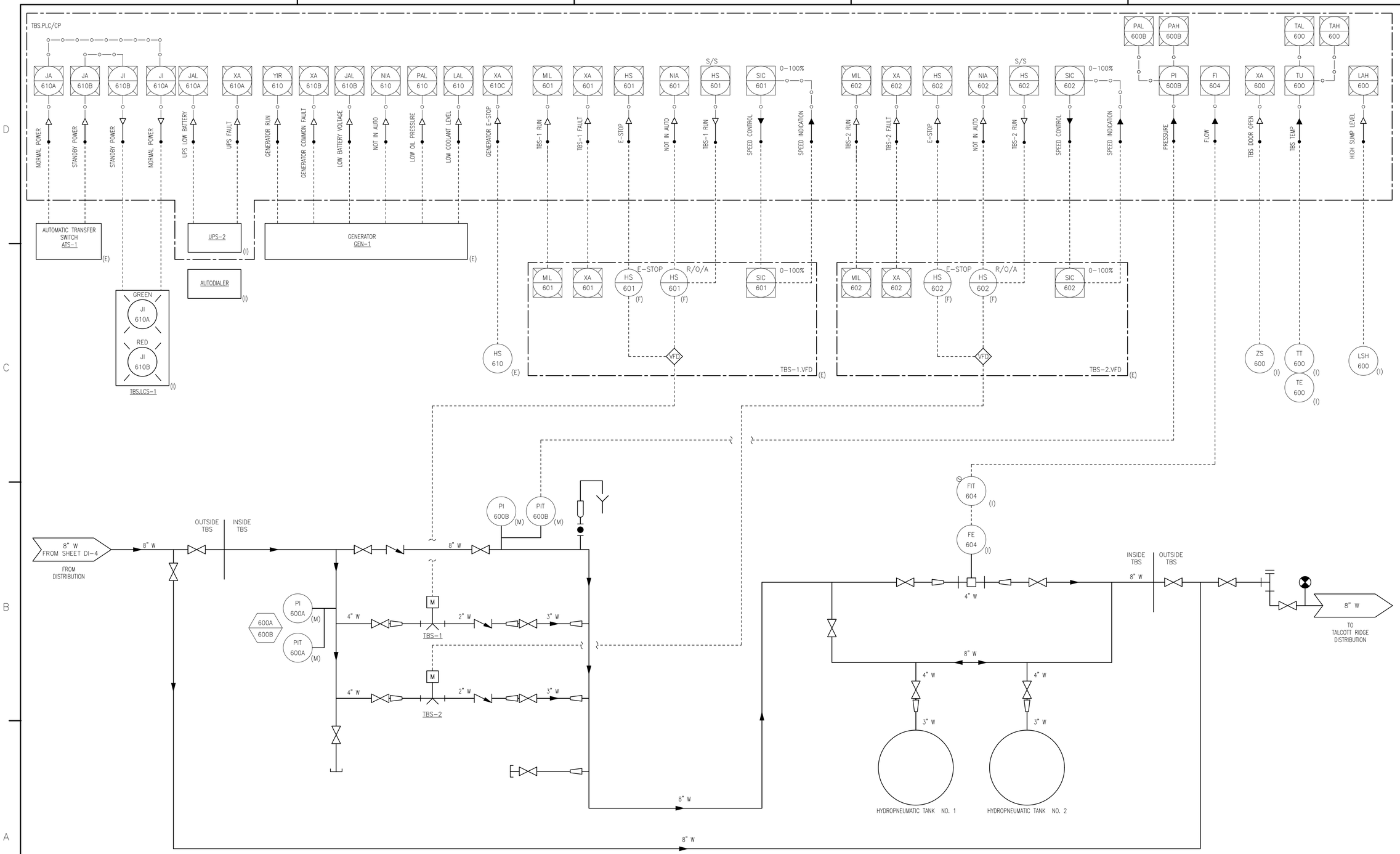

NOTES:

1. SEE EQUIPMENT LOOP DESCRIPTIONS SHEET DI-3.
2. SEE MECHANICAL SHEET M-113 FOR TALCOTT RIDGE BOOSTER STATION PLAN

MARK	DATE	MADE BY/ CHECKED	DESCRIPTION
			100% SUBMITTAL

REVISIONS

AECOM
AECOM, INC.
500 ENTERPRISE DRIVE
ROCKY HILL, CT 06067
PHONE (860) 1-800-0000

STATE OF CONNECTICUT
STEVEN A. MILLER
No. 27954
PROFESSIONAL ENGINEER

EPA CONTRACT NO. EP-S1-06-01
DURHAM MEADOWS WATERLINE RD
DURHAM AND MIDDLETOWN, CONNECTICUT
TASK ORDER NO. 0060-RD-RD-01D5

TALCOTT RIDGE BOOSTER STATION

INSTRUMENTATION

PROJECT NO:	60275749
CAD DWG FILE:	DI-6
DESIGNED BY:	JD
DRAWN BY:	JD
DEPT CHECK:	YR
PROJ CHECK:	MWM
DATE:	APRIL 2018
SCALE:	

DI-6

ANSI D – 8-Nov-17

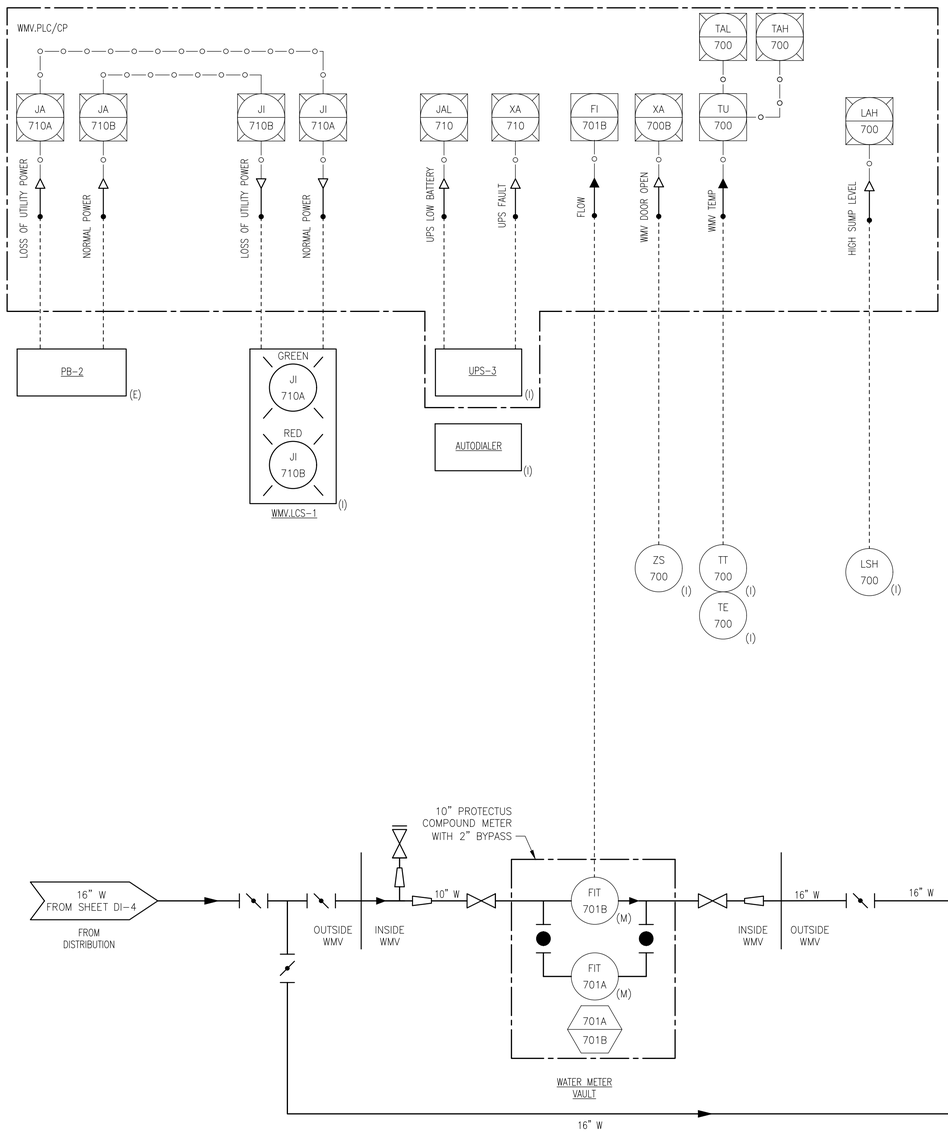

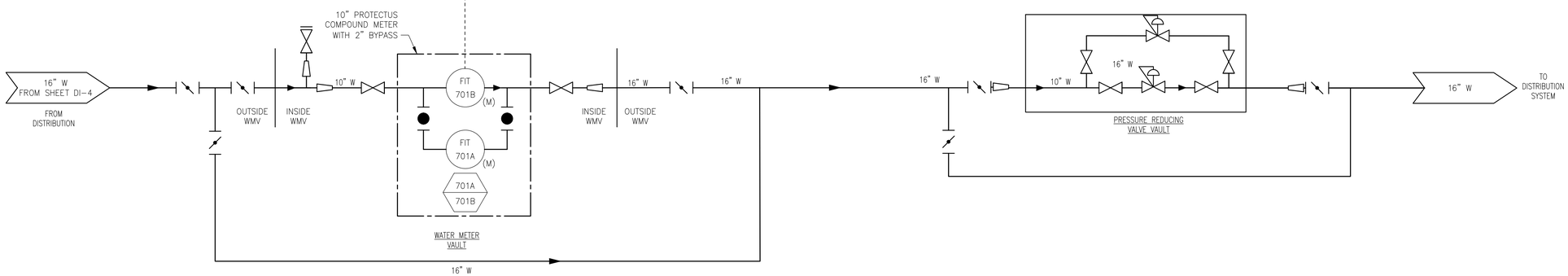

NOTES:

1. SEE EQUIPMENT LOOP DESCRIPTIONS SHEET DI-3.
2. SEE MECHANICAL SHEET M-109 FOR WATER METER VAULT PLAN.
3. SEE MECHANICAL SHEET M-110 FOR PRESSURE REDUCING VALVE VAULT PLAN.

MARK	DATE	MADE BY	CHECKED	DESCRIPTION
				100% SUBMITTAL

REVISIONS

AECOM
AECOM, INC.
500 ENTERPRISE DRIVE
ROCKY HILL, CT 06067
PHONE (860) 1-800-3300

STATE OF CONNECTICUT
YUSUF A. MUCHI
No. 27954
PROFESSIONAL ENGINEER

EPA CONTRACT NO. EP-S1-06-01
DURHAM MEADOWS WATERLINE RD
DURHAM AND MIDDLETOWN, CONNECTICUT
TASK ORDER NO. 0060-RD-RD-01D5

WATER METER VAULT AND PRESSURE REDUCING VAULT

INSTRUMENTATION

PROJECT NO:	60275749
CAD DWG FILE:	DI-7
DESIGNED BY:	JD
DRAWN BY:	JD
DEPT CHECK:	YR
PROJ CHECK:	MWM
DATE:	APRIL 2018
SCALE:	

DI-7

ANSI D – 3-Nov-17

PLANS

- DT3 1 a — SURFACE, RECESSED OR PENDANT MTD INCAND. OR HIGH INTENSITY DISCHARGE LUMINARIE
- SURFACE, RECESSED OR PENDANT MOUNTED FLUORESCENT LUMINARIE
- S — WALL MOUNTED INCANDESCENT OR HIGH INTENSITY DISCHARGE LUMINARIE
- POLE OR POST–TOP MOUNTED LUMINARIE
- ROADWAY LUMINARIE
- FLOODLIGHT
- WALL MOUNTED EXIT LIGHT. ARROW (IF SHOWN) INDICATES DIRECTION OF EGRESS
- CEILING OR PENDANT MOUNTED EXIT LIGHT. ARROW (IF SHOWN) INDICATES DIRECTION OF EGRESS
- BATTERY OPERATED AUXILIARY LIGHTING UNIT, MOUNT 7'–6" ABOVE FINISHED FLOOR UNLESS OTHERWISE NOTED
- REMOTE MOUNTED AUXILIARY LIGHTING HEAD MOUNTED 7'–6" ABOVE FLOOR UNLESS OTHERWISE NOTED.

"1" DENOTES PANELBOARD BRANCH CIRCUIT #1.

"a" DENOTES CONTROLLED BY LOCAL SWITCH "a".

"DT3" DENOTES FIXTURE TYPE.

"S" DENOTES HIGH INTENSITY DISCHARGE FIXTURE WITH STANDBY QUARTZ

- DENOTES DEVICE OR EQUIPMENT – RECESSED/FLUSH MOUNTED
- DENOTES DEVICE OR EQUIPMENT – SURFACE MOUNTED
- S_a — SINGLE POLE SWITCH CONTROLS FIXTURES MARKED "a"
- $S2_b$ — DOUBLE POLE SWITCH CONTROLS FIXTURES MARKED "b"
- $S3_c$ — THREE–WAY SWITCH CONTROLS FIXTURES MARKED "c"
- $S4_d$ — FOUR–WAY SWITCH CONTROLS FIXTURES MARKED "d"
- HOA_e — HAND–OFF–AUTO SELECTOR SWITCH CONTROLS FIXTURES MARKED "e"
- DUPLEX RECEPTACLE, FLOOR MOUNTED
- GFCI — DUPLEX RECEPTACLE (GROUND TYPE) GFCI DENOTES GROUND FAULT CIRCUIT INTERRUPTER
- WPG — DUPLEX RECEPTACLE (GROUND TYPE) GFCI WITHIN WEATHERPROOF ENCLOSURE
- SPECIAL PURPOSE RECEPTACLE, TYPE AND AMPERE RATING AS INDICATED ON PLAN
- W — SIMPLEX RECEPTACLE (GROUND TYPE), "W" DENOTES WATERTIGHT EQUIPMENT, "WP" DENOTES WEATHERPROOF "XP" DENOTES EXPLOSION PROOF
- MANUAL MOTOR STARTER
- MAGNETIC MOTOR STARTER
- COMBINATION MAGNETIC MOTOR STARTER AND DISCONNECT SWITCH
- TWO SPEED MOTOR STARTER
- REDUCED VOLTAGE MOTOR STARTER
- C — MAGNETIC CONTACTOR
- F — FUSED DISCONNECT SWITCH 600V, 3 POLE UNLESS OTHERWISE NOTED. 30A – INDICATES FUSE SIZE OR AS INDICATED ON ONE–LINE DIAGRAM
- UNFUSED DISCONNECT SWITCH 600V, 3 POLE UNLESS OTHERWISE NOTED. 30A – INDICATES SWITCH SIZE OR AS INDICATED ON ONE–LINE DIAGRAM
- PANELBOARD
- ENGINEERED ELECTRICAL DISTRIBUTION EQUIPMENT, SWITCHGEAR, MCC, ETC.
- M — MOTOR FURNISHED AND INSTALLED UNDER OTHER DIVISION, CONNECTED UNDER DIVISION 16.
- M — PACKAGED MOTOR WITH MOTOR STARTER AND CONTROL FURNISHED AND INSTALLED UNDER OTHER DIVISIONS, CONNECTED UNDER DIVISION 16.
- EQUIPMENT FURNISHED AND MOUNTED UNDER OTHER DIVISIONS, ELECTRICALLY INSTALLED (CONDUITS, WIRE, TERMINATIONS) UNDER DIVISION 16.
- J — JUNCTION BOX
- G — GROUND ROD: TYPE AND SIZE AS INDICATED ON PLAN OR IN SPECIFICATIONS.
- EXOTHERMIC CONNECTION
- G — GROUNDING CABLE
- CONDUIT RUNS CONCEALED IN FLOOR,WALL AND UNDERGROUND DUCTBANKS
- CONDUIT RUNS ABOVE SUSPENDED CEILING
- CONDUIT RUNS EXPOSED
- PIPE LINE HEAT TRACING. FOR RATING SEE SPECIFICATIONS AND PLANS
- HOMERUN TO EQUIPMENT INDICATED. WHERE MORE THAN TWO WIRES, DIAGONAL LINES INDICATE NUMBER OF WIRES PLUS GROUND IN CONDUIT.
- A — DENOTES SECTION LETTER OR DETAIL NUMBER
- E–12 — DENOTES ELECTRICAL SHEET NUMBER ON WHICH SECTION OR DETAIL IS SHOWN
- XXX — SEE ABBREVIATION FOR ITEM TYPE
- [XY–Z] — CONDUIT AND WIRE DESIGNATION

DIAGRAMS

- 1200/800 — CIRCUIT BREAKER, 3–POLE UNLESS OTHERWISE NOTED. UPPER NUMBER IS FRAME SIZE. LOWER NUMBER IS TRIP SETTING. WHERE ONLY ONE NUMBER IS SHOWN, NUMBER IS TRIP SETTING.
- MCP — MOTOR CIRCUIT PROTECTOR
- FVNR 2 — MAGNETIC STARTER
  - FVNR = FULL VOLTAGE, NON–REVERSING
  - FVR = FULL VOLTAGE, REVERSING
  - FVTS = FULL VOLTAGE, TWO SPEED
  - RVNR = REDUCED VOLTAGE, NON–REVERSING,
  - C = MAGNETIC CONTACTOR (WITHOUT OL.)
  - CMS = COMBINATION MOTOR STARTER WITH DISCONNECT MEANS
  - RVSS = REDUCED VOLTAGE, SOLID STATE
  - NUMBER INDICATES NEMA STARTER SIZE
- MCP / FVNR 2 — MOTOR STARTER COMPLETE WITH ENCLOSURE, MCP, CPT AND CONTROLS
- UNFUSED DISCONNECT SWITCH. 30 AMP, 480VAC, 3 POLE UNLESS OTHERWIRE IINDICATED.
- 70A — FUSED DISCONNECT SWITCH, 3–POLE UNLESS OTHERWISE NOTES. UPPER NUMBER INDICATES FUSE CLIP AMPERE SIZE. LOWER NUMBER INDICATES FUSE RATING.
- J — FUSE – LETTER DENOTES CLASS
- PRIMARY FUSE CUTOUT
- TRANSFORMER, SIZE AS NOTED, DELTA CONNECTION–PRIMARY. WYE CONNECTION GROUNDED–SECONDARY (LOW VOLTAGE).
- 5 — SQUIRREL CAGE INDUCTION MOTOR. NUMBER DENOTES HORSEPOWER OR KW
- 5 — PACKAGED MOTOR WITH MOTOR, STARTER AND CONTROLS. NUMBER INDICATES KILOWATT RATING OR HORSEPOWER.
- 10KW — ELECTRIC WATER HEATER 10KW INDICATES KILOWATT SIZE
- F 10KW — ELECTRIC UNIT HEATER 10KW INDICATES KILOWATT SIZE
- 600:5 (3) — CURRENT TRANSFORMER. UPPER NUMBERS ARE RATIO. NUMBER IN ( ) IS QUANTITY.
- GFP — GROUND FAULT PROTECTION
- ST — SHUNT TRIP RELAY
- SPD — SURGE PROTECTION DEVICE
- R — INDICATING LIGHTS: R=RED, B=BLUE, G=GREEN, A=AMBER, W=WHITE
- K — KEY INTERLOCK
- K — MECHANICALLY INTERLOCKED (KEY)
- E — ELECTRICALLY INTERLOCKED
- NORMALLY OPEN CONTACT
- NORMALLY CLOSED CONTACT
- 480:120 (1) CPT — DRAWOUT DEVICE
  - CPT = CONTROL POWER TRANSFORMER
  - PT = POTENTIAL TRANSFORMER.
  - UPPER NUMBERS ARE RATIO.
  - NUMBER IN ( ) IS QUANTITY
- E 1200/800 — LOW VOLTAGE CIRCUIT BREAKER, MANUALLY OR ELECTRICALLY OPERATED WITH STATIC TRIP DEVICES AND GROUND SENSOR. UPPER NUMBER INDICATES FRAME SIZE, LOWER NUMBER INDICATES TRIP SETTING. "E" INDICATES ELECTRICALLY OPERATED.

LEGEND:

- NEW WORK
- EXISTING WORK
- DEMOLITION WORK – DEMOLISH EQUIPMENT INDICATED. DEMOLITION SHALL INCLUDE THE REMOVAL OF THE ASSOCIATED WIRE AND CONDUIT. COORDINATE DEMOLITION WORK WITH OTHER DISCIPLINES PRIOR TO BEGINING WORK.

ABBREVIATIONS

AFF	ABOVE FINISH FLOOR
AHU	AIR HANDLING UNIT
AN	ANNUNCIATOR
ATC	AUTOMATIC TEMPERATURE CONTROL
ATS	AUTOMATIC TRANSFER SWITCH
C	CONDUIT
CHGR	CHARGER
CLF	CURRENT LIMITING FUSE
CP	CONTROL PANEL
CPT	CONTROL POWER TRANSFORMER
CWS	CONDUIT WALL SEAL
DP	DISTRIBUTION PANEL
ECB	ENCLOSED CIRCUIT BREAKER
EF	EXHAUST FAN
EHH	ELECTRICAL HAND HOLE
EL	ELEVATION
EMH	ELECTRICAL MANHOLE
EO	ELECTRICALLY OPERATED
ES	EMERGENCY STOP SWITCH
EUH	ELECTRIC UNIT HEATER
FAA	FIRE ALARM ANNUNCIATOR PANEL
FACP	FIRE ALARM CONTROL PANEL
FOC	FIBER OPTIC CABLE
FS	FLOW SWITCH
G	GROUND
GEN	GENERATOR
HA	HAND–AUTOMATIC
GFCI	GROUND FAULT CIRCUIT INTERRUPTER
HH	HANDHOLE
HOA	HAND–OFF–AUTOMATIC
HP	HORSEPOWER
KW	KILOWATT
LR	LOCAL–REMOTE
MCC	MOTOR CONTROL CENTER
MCP	MOTOR CIRCUIT PROTECTOR
MLO	MAIN LUGS ONLY
MOV	MOTOR OPERATED VALVE
MV	MOTORIZED VALVE
N	NEUTRAL
NIR	NOT IN REMOTE
NC	NORMALLY CLOSED
NO	NORMALLY OPEN
OC	OPEN–CLOSE
OL	MOTOR OVERLOADS
OS	OCCUPANCY SENSOR
OSC	OPEN–STOP–CLOSE
OCT	OPEN–CLOSE–TRIP
PB	PANELBOARD
PBX	PULL BOX
PWR	POWER
ROA	RUN–OFF–AUTO
SCP	SECURITY CONTROL PANEL
SCR	SILICON CONTROL RECTIFIER

ABBREVIATIONS

SF	SLOW–FAST
SFS	SLOW–FAST–STOP
SOFA	SLOW–OFF–FAST–AUTOMATIC
SPD	SURGE PROTECTIVE DEVICE
STP	SHIELDED TWISTED PAIR
SWBD	SWITCHBOARD
SV	SOLENOID VALVE
SW	SWITCH
T	THERMOSTAT
TD	TIME DELAY RELAY
TR	TRANSFORMER
TS	TEMPERATURE SENSOR
TYP	TYPICAL
VFD	VARIABLE FREQUENCY DRIVE
WP	DENOTES WEATHERPROOF EQUIPMENT
WPG	WEATHERPROOF GFCI RECEPTACLE
XFMR	TRANSFORMER
XST	EXISTING
ZSS	ZERO SPEED SWITCH

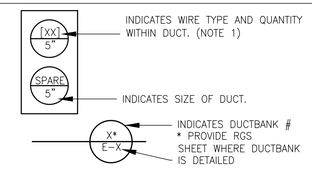

TYPICAL DUCTBANK SECTION LEGEND

NOTES:

1. WHERE MULTIPLE CONDUIT AND WIRE DESIGNATIONS ARE SHOWN ([XX][XX]) IN A SINGLE DUCTBANK SECTION INSTALL ALL CONDUCTORS IN A SINGLE DUCT. SIZE OF CONDUIT AS INDICATED BY DUCTBANK SECTION.

GENERAL NOTES

1. CONDUIT INSTALLATIONS ARE SHOWN DIAGRAMMATICALLY ONLY AND SHALL BE INSTALLED IN A MANNER TO PREVENT CONFLICTS WITH EQUIPMENT AND STRUCTURAL CONDITIONS. EXPOSED CONDUITS SHALL BE INSTALLED PARALLEL TO BEAMS AND WALLS.
2. SWITCHES SHALL BE MOUNTED 4'–0" ABOVE FINISHED FLOOR UNLESS OTHERWISE NOTED. RECEPTACLES SHALL BE MOUNTED 4'–0" ABOVE FINISHED FLOOR UNLESS OTHERWISE NOTED.
3. SURFACE MOUNTED PANELS AND PANEL BOARDS, SHALL BE MOUNTED TO MAINTAIN A 1/4" AIR SPACE BETWEEN THE ENCLOSURE AND THE WALL.
4. EACH LIGHTING AND RECEPTACLE CIRCUITS SHALL BE FED FROM SEPARATE CIRCUITS. CONDUIT AND WIRE (NOT SHOWN) FOR LIGHTING FIXTURES, SWITCHES AND/OR RECEPTACLES SHALL BE FURNISHED AND INSTALLED AND SHALL BE AS FOLLOWS:
   - A. 3/4" (MIN.) RIGID METAL CONDUIT
     - A1. EXPOSED IN UNFINISHED AREAS.
   - B. NO. 12 CU. WIRE (MIN.) TYPE "THWN/THHN" NO. OF WIRES AS REQUIRED, INCLUDING GROUND.
5. ITEMS SHALL BE PROVIDED WITH NEMA ENCLOSURE AS INDICATED ON THE AREA CLASSIFICATION SCHEDULE.
6. ALL SWITCHES, RECEPTACLES AND EQUIPMENT SHALL COMPLY WITH THE LATEST VERSION OF THE ADA (AMERICANS WITH DISABILITIES ACT).
7. PRIOR TO CONSTRUCTION OF NEW DUCT BANKS, THE CONTRACTOR SHALL FIELD VERIFY PROPOSED ROUTING BY FIELD INSPECTIONS, TEST PITS AS NEEDED TO AVOID POTENTIAL CONFLICTS WITH EXISTING UTILITIES.
8. REFER TO INSTRUMENTATION AND MECHANICAL DRAWINGS FOR PROCESS EQUIPMENT DETAILS.
9. FOR SERVICE POLE AND DUCT BANK SECTION DETAILS SEE SHEET E–7.
10. FOR BUS BAR DETAILS SEE SHEET E–14.
11. REFER TO THE FOLLOWING DRAWINGS FOR CIVIL PLAN DETAILS:
    - 11.1. G–4: GENERAL KEY PLAN
    - 11.2. C–2: ALTITUDE VALVE VAULT AND WATER STORAGE TANK
    - 11.3. C–3: ALTITUDE VALVE VAULT AND WATER STORAGE TANK
    - 11.4. C–9: TALCOTT RIDGE BOOSTER STATION
    - 11.5. C–11: WATER METER VAULT
    - 11.6. C–15: PRESSURE REDUCING VALVE VAULT
11. REFER TO THE FOLLOWING DRAWINGS FOR MECHANICAL PLAN DETAILS:
    - 11.1 M–101: CHERRY HILL STORAGE TANK
    - 11.2 M–107: ALTITUDE VALVE VAULT
    - 11.3 M–109: WATER METER BUILDING
    - 11.4 M–110: PRESSURE REDUCING VALVE VAULT
    - 11.5 M–112: LONG HILL PUMP STATION
    - 11.6 M–113: TALCOTT RIDGE BOOSTER STATION

MARK	DATE	MADE BY	CHECKED	DESCRIPTION

100% SUBMITTAL

REVISIONS

AECOM, INC.
250 APPLE TREE DRIVE
ROCKY HILL, CT 06067
PHONE (860) 263-3800

AECOM

STATE OF CONNECTICUT — STATE REGISTERED PROFESSIONAL ENGINEER — No. 27364

EPA CONTRACT NO. EP-S1-06-01
DURHAM MEADOWS WATERLINE RD
DURHAM AND MIDDLETOWN, CONNECTICUT
TASK ORDER NO. 0060-RD-RD-0105

LEGEND, ABBREVIATIONS, AND GENERAL NOTES

ELECTRICAL

PROJECT NO:	60275749
CAD DWG FILE:	E–1
DESIGNED BY:	AA
DRAWN BY:	AA
DEPT CHECK:	YR
PROJ CHECK:	MWM
DATE:	APRIL 2018
SCALE:	

E-1

ANSI D – 2–May–18

CONDUIT AND WIRE SCHEDULE

FOR CONDUITS INSTALLED IN DUCT BANK SECTIONS, THE SIZE OF THE CONDUIT SHALL BE AS SHOWN ON THE DUCT BANK SECTION. PROVIDE QUANTITY OF CONDUCTORS AS LISTED BELOW.

[VSC] 1"C WITH VENDOR SUPPLIED CABLE
[CX] 1"C, COAXIAL CABLE

ANALOG SIGNAL WIRING:

[C1] 1"C, 1-TSP 16 AWG
[C2] 1"C, 2-TSP 16 AWG
[C3] 1"C, 3-TSP 16 AWG
[C4] 1 1/2"C, 4-TSP 16 AWG
[C5] 1 1/2"C, 5-TSP 16 AWG
[C6] 1 1/2"C, 6-TSP 16 AWG

CONTROL WIRING:

[D2] 3/4"C, 2-14 AWG, 1-14 AWG (G)
[D4] 3/4"C, 4-14 AWG, 1-14 AWG (G)
[D6] 3/4"C, 6-14 AWG, 1-14 AWG (G)
[D10] 3/4"C, 10-14 AWG, 1-14 AWG (G)
[D12] 3/4"C, 12-14 AWG, 1-14 AWG (G)
[D14] 3/4"C, 14-14 AWG, 1-14 AWG (G)
[D16] 3/4"C, 16-14 AWG, 1-14 AWG (G)
[D18] 3/4"C, 18-14 AWG, 1-14 AWG (G)
[D20] 3/4"C, 20-14 AWG, 1-14 AWG (G)
[D30] 1"C, 30-14 AWG, 1-14 AWG (G)

POWER WIRING:

[PA] 1"C, 2-12 AWG, 1-12 AWG (G)
[PA-4] 1"C, 4-12 AWG, 1-12 AWG (G)
[PA-6] 1"C, 6-12 AWG, 1-12 AWG (G)
[PB] 1"C, 3-12 AWG, 1-12 AWG (G)
[PC] 1"C, 3-10 AWG, 1-12 AWG (G)
[PC-2] 1"C, 2-10 AWG, 1-12 AWG (G)
[PC-8] 1"C, 8-10 AWG, 1-10 AWG (G)
[PD] 1"C, 3-8 AWG, 1-10 AWG (G)
[PD-2] 1"C, 2-8 AWG, 1-10 AWG (G)
[PE] 1"C, 3-6 AWG, 1-10 AWG (G)
[PF] 1"C, 3-4 AWG, 1-10 AWG (G)
[PG] 1"C, 3-4 AWG, 1-8 AWG (G)
[PJ] 2"C, 3-1 AWG, 1-8 AWG, (G)
[PJ-4] 2"C, 4-1 AWG, 1-8 AWG, (G)
[PK] 2"C, 3-1 AWG, 1-6 AWG (G)
[PK-4] 2"C, 4-1 AWG, 1-6 AWG (G)
[PL] 2"C, 3-1/0 AWG, 1-6 AWG (G)
[PN] 2"C, 3-3/0 AWG, 1-6 AWG (G)
[PN-4] 2"C, 4-4/0 AWG, 1-6 AWG (G)
[PP] 2"C, 3-4/0 AWG, 1-4 AWG (G)
[PP-4] 3"C, 4-4/0 AWG, 1-4 AWG (G)

AREA CLASSIFICATION SCHEDULE

LOCATION	NEMA TYPE				
	1	12	3R	4	4X
ALTITUDE VAULT					X
WATER METER VAULT					X
PRV VAULT					X
OUTDOORS			X		
INSIDE ELECTRICAL ENCLOSURE EE-1 AND EE-2	X				
OUTSIDE ELECTRICAL ENCLOSURE EE-1 AND EE-2					X
LONG HILL PUMP STATION*		X			
TALCOTT RIDGE BOOSTER STATION				X	

*AREA WITHIN 3 FT AROUND NEW CHLORINE SYSTEM IS NEMA 4X.

LUMINAIRE SCHEDULE

LUMINIARE		LAMP		VOLTAGE	MANUFACTURER AND BASE MODEL NO.		REMARKS AND OPTIONS
TYPE	MTG	TYPE	WATTS				
FL1	POLE	LED	1-41	120	LITHONIA D-SERIES 1	OR EQUAL	D-SERIES FLOOD LIGHTING WITH NORMAL LF DISTRIBUTION. TOW COB ENGINES AND TENON SLIPFITTER, DARK BRONZE FINISH, MINUM OF 70 CRI, DARK SKY COMPLIANT AND WET LOCATION LISTED.
SL1	SURFACE	LED	2-17	120	LITHONIA ZL2 LENSED LED STRIPLIGHT	OR EQUAL	2-24" 2-LAMP LENSED LED STRIP LIGHT WITH A MINIMUM OF 70 CRI
BM2	PEND	LED	45	120	LITHONIA SERIES FEM	OR EQUAL	LUMINAIRE 4'-0" ONE-PIECE FIBERGLASS HOUSING, LED'S MOUNTED TO CORE CIRCUIT BOARD, MEDIUM LIGHT DISTRIBUTION, FROSTED POLYCARBONATE LENS, 0-10V DIMMING, HIGH EFFICIENCY DRIVER, 4000K LED'S, 6,000 NOMINAL LUMEN, MINIMUM CRI 80, NEMA 4X LISTED
EM1	WALL	LED	50	120	LITHONIA SERIES WST	OR EQUAL	WALL MOUNTED LUMINAIRE, DIE CAST ALUMINUM HOUSING, THERMOSET POWDER COAT FINISH, DARK BRONZE FINISH, 4000K LED'S (6,000 LUMENS), 0-10V DIMMING, HIGH EFFICIENCY DRIVER, ZERO UPLIGHT (DARK SKY COMPLIANT, MINIMUM CRI OF 70, NIGHTTIME FRIENDLY (ZERO UPLIGHT) WET LOCATION LISTED.
EU2	WALL	LED	2-6	120	EMERGI-LITE SERIES HP	OR EQUAL	EMERGENCY BATTERY UNIT, GRAY FIBERGLASS-REINFORCED HOUSING, STAINLESS STEEL HARDWARE, 12 VOLT, 40 WATT BATTERY WITH TWO 6 WAATT LED HEADS, NON-AUDIBLE ADVANCED DIAGNOSTICS AND SELF-TEST, NEMA 4X, UL LISTED. PROVIDE PROVISION FOR CONNECTION TO REMOTE HEAD(S).
FB	WALL	LED	–	120	LITHONIA SERIES LV EL N	OR EQUAL	EXIT SIGN, CAST-ALUMINUM HOUSING, (WHITE COLOR), POLYCARBONATE LENS, SINGLE FACE, RED LETTERS, WHITE FACEPLATE, NICKEL-CADMIUM BATTERY, SELF DIAGNOSTICS, NEMA-4X, UL LISTED.
K1	WALL	LED	4	UNV	SURE-LITES SERIES SEL SERIES REMOTE	OR EQUAL	EMERGENCY WEATHER RESISTANT REMOTE HEAD, UNIVERSAL VOLTAGE INPUT FORM 4.8V THROUGH 12V, 4.1 WATT (285 LUMENS), GRAY FINISH, WET LOCATION, UL LISTED.

EQUIPMENT GROUNDING SCHEDULE

PROVIDE GROUNDING CONDUITS AND WIRES INDICATED FROM EQUIPMENT LISTED TO THE GROUNDING LOOP OR TO THE GROUNDING BUS BARS AS INDICATED AND IN ACCORDANCE WITH THE CONDUIT AND WIRE SCHEDULE. FOR GROUNDING OF PIPING AND OTHER MISCELLANEOUS ITEMS PROVIDE COMPLETE GROUNDING SYSTEM IN ACCORDANCE WITH THE REQUIREMENTS OF THE LOCAL REGULATIONS

EQUIPMENT	GROUNDING CONDUIT AND WIRE	QUANTITY	NOTES
DP-1	1"C, 1-6 AWG (G)	TWO	TO GROUNDING BUS BAR
MPC-1	1"C, 1-6 AWG (G)	ONE	TO GROUNDING BUS BAR
GEN-1	1"C, 1-6 AWG (G)	TWO	TO GROUNDING LOOP

100% SUBMITTAL

MARK	DATE	MADE BY	CHECKED	DESCRIPTION

REVISIONS

AECOM, INC.
250 APPLEWOOD DRIVE
ROCKY HILL, CT 06067
PHONE (860) 263-3800

AECOM

STATE OF CONNECTICUT · MARK W. MILLER · No. 27954 · LICENSED PROFESSIONAL ENGINEER

May 2, '18

EPA CONTRACT NO. EP-S1-06-01
DURHAM MEADOWS WATERLINE RD
DURHAM AND MIDDLETOWN, CONNECTICUT
TASK ORDER NO. 0060-RD-RD-0105

CONDUIT, WIRE, AND LIGHTING SCHEDULES AND AREA CLASSIFICATION

ELECTRICAL

PROJECT NO: 60275749
CAD DWG FILE: E-2
DESIGNED BY: JD
DRAWN BY: JD
DEPT CHECK: YR
PROJ CHECK: MWM
DATE: APRIL 2018
SCALE:

E-2

ANSI D – 2-May-18

NOTES:

1. FOR SERVICE POLE AND DUCT BANK SECTION DETAILS SEE SHEET E-8.
2. REFER TO DRAWINGS C-2 AND C-3 FOR SITE DETAILS.

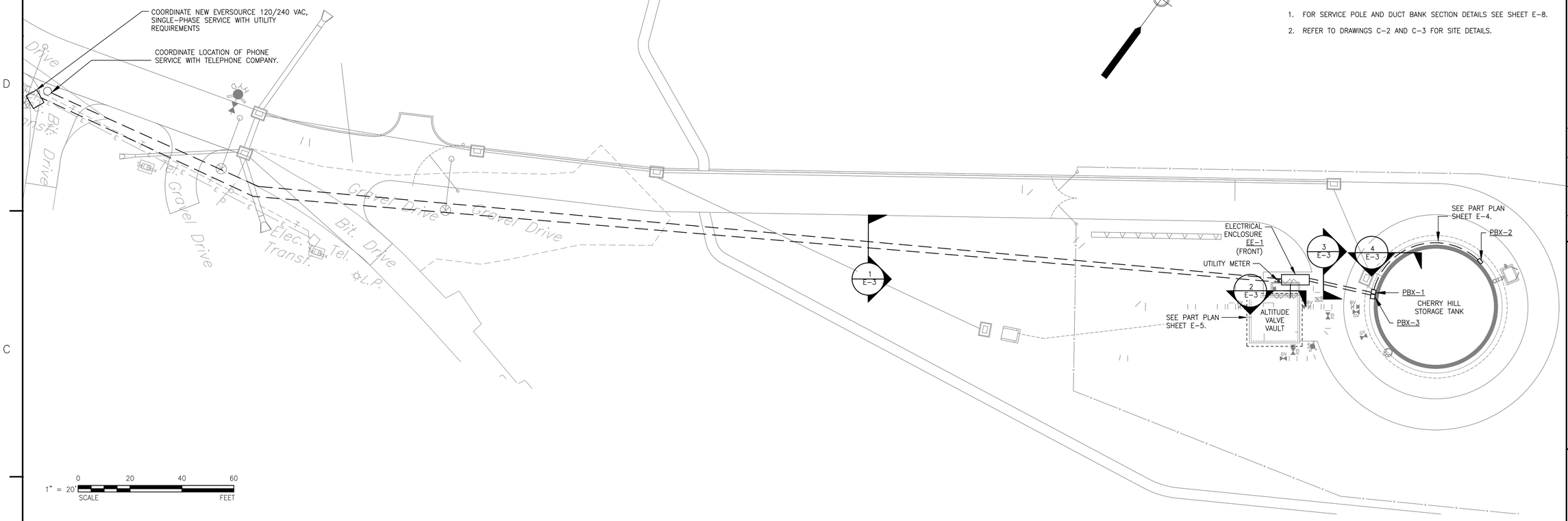

ALTITUDE VAULT AND CHERRY HILL STORAGE TANK ELECTRICAL SITE PLAN

SCALE: 1" = 20'-0"

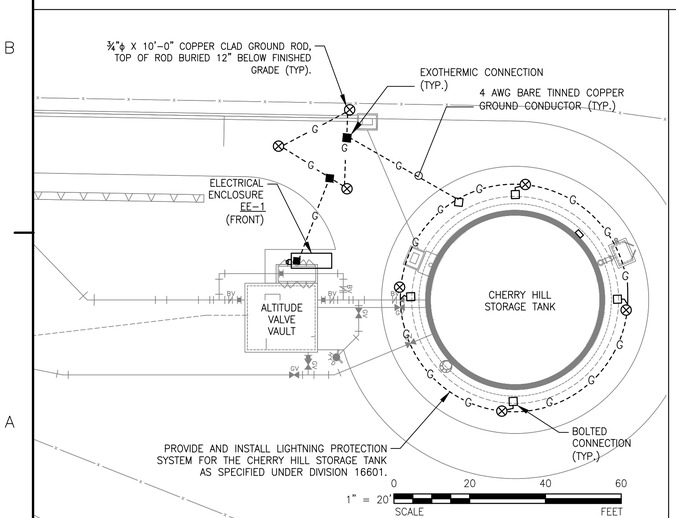

ALTITUDE VAULT AND CHERRY HILL STORAGE TANK GROUNDING PLAN

SCALE: 1" = 20'-0"

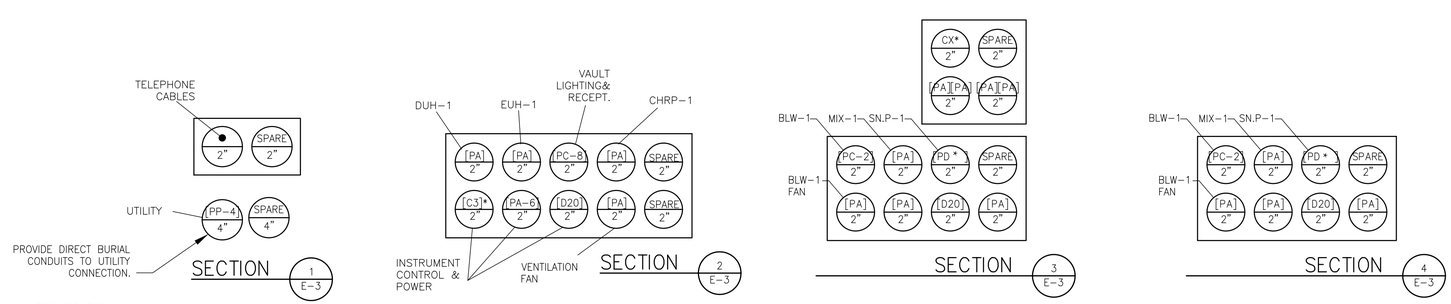

* PROVIDE RGS

DUCT BANK SCHEDULE

SCALE:NTS

MARK	DATE	MADE BY	CHECKED	DESCRIPTION
1	15-8-18			AMENDMENT 0006

REVISIONS

100% SUBMITTAL

AECOM, INC.
250 APPLEWOOD DRIVE
ROCKY HILL, CT 06067
PHONE (860) 263-3800

EPA CONTRACT NO. EP-S1-06-01
DURHAM MEADOWS WATERLINE RD
DURHAM AND MIDDLETOWN, CONNECTICUT
TASK ORDER NO. 0060-RD-RD-0105

CHERRY HILL STORAGE TANK ELECTRICAL SITE PLAN

ELECTRICAL

PROJECT NO:	60275749
CAD DWG FILE:	E-3
DESIGNED BY:	AA
DRAWN BY:	AA
DEPT CHECK:	YR
PROJ CHECK:	MWM
DATE:	APRIL 2018
SCALE:	

E-3

ANSI D – 2-May-18

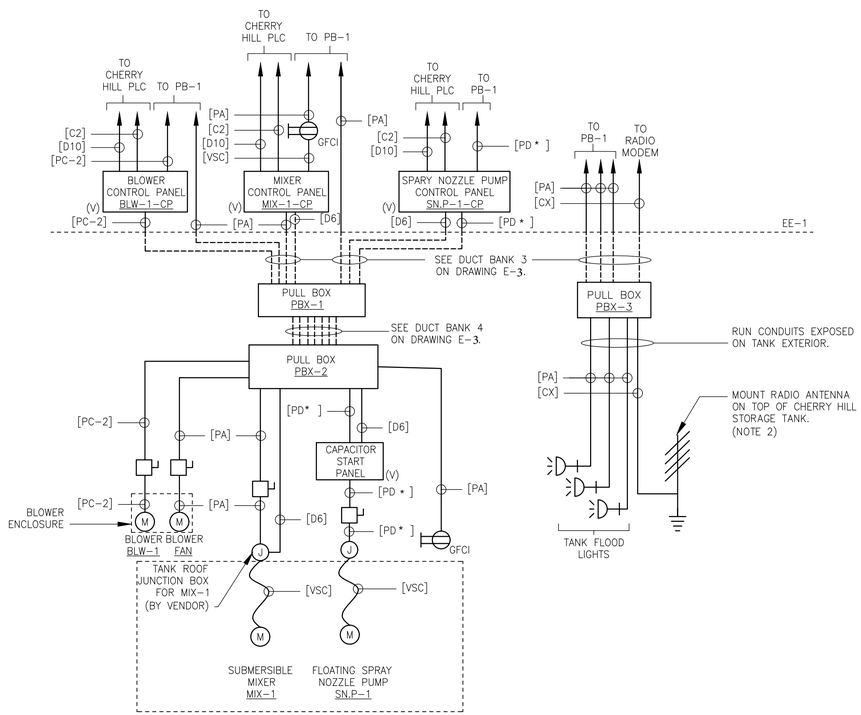

NOTES:

1. RUN CONDUITS EXPOSED UP SIDE OF TANK FROM PULL BOX. CONDUITS SHALL BE ATTACHED TO TANK IN A MANNER ACCEPTABLE WITH TANK MANUFACTURER.
2. COMMUNICATIONS ANTENNA SHALL BE MOUNTED ON TOP OF WATER STORAGE TANK. ANTENNA LOCATION AND MOUNTING HEIGHT TO BE AS REQUIRED BY RADIO PATH SURVEY.
3. REFER TO DRAWINGS C-2 AND C-3 FOR SITE DETAILS.
4. MOUNT EQUIPMENT INCLUDING PULL BOXES AND PANELS ON FLOOR-MOUNTED STRUT SUPPORTS NEXT TO TANK.
5. PROVIDE 16' ALUMINUM LIGHT POLE AS LITHONIA SERIES SSA OR EQUAL.

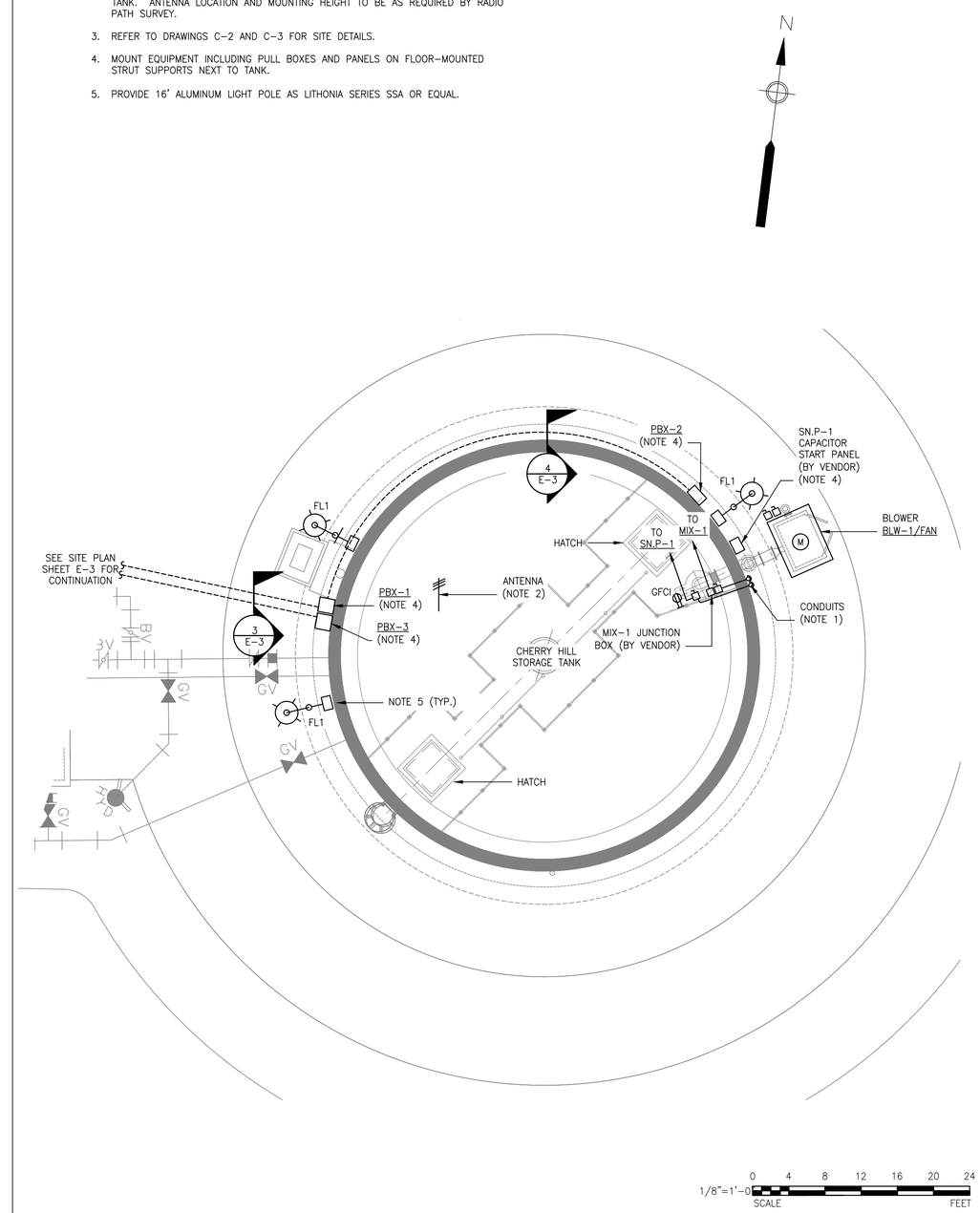

CHERRY HILL TANK – RISER DIAGRAMS

SCALE:NTS

CHERRY HILL TANK – PART PLAN

SCALE:1/8" = 1'-0"

100% SUBMITTAL

MARK	DATE	MADE BY	CHECKED	DESCRIPTION
1	15-8-18			AMENDMENT 0006

REVISIONS

AECOM, INC.
250 APPROACH DRIVE
ROCKY HILL, CT 06067
PHONE (860) 263-3800

AECOM

STATE OF CONNECTICUT
MARK A. YR
No. 27364
LICENSED PROFESSIONAL ENGINEER
May 2, 2018

EPA CONTRACT NO. EP-S1-06-01
DURHAM MEADOWS WATERLINE RD
DURHAM AND MIDDLETOWN, CONNECTICUT
TASK ORDER NO. 0060-RD-RD-01D5

CHERRY HILL STORAGE TANK
ELECTRICAL PART PLAN &RISER DIAGRAMS

ELECTRICAL

PROJECT NO:	60275749
CAD DWG FILE:	E-4
DESIGNED BY:	AA
DRAWN BY:	AA
DEPT CHECK:	YR
PROJ CHECK:	MWM
DATE:	APRIL 2018
SCALE:	

E-4

ANSI D – 2-May-18

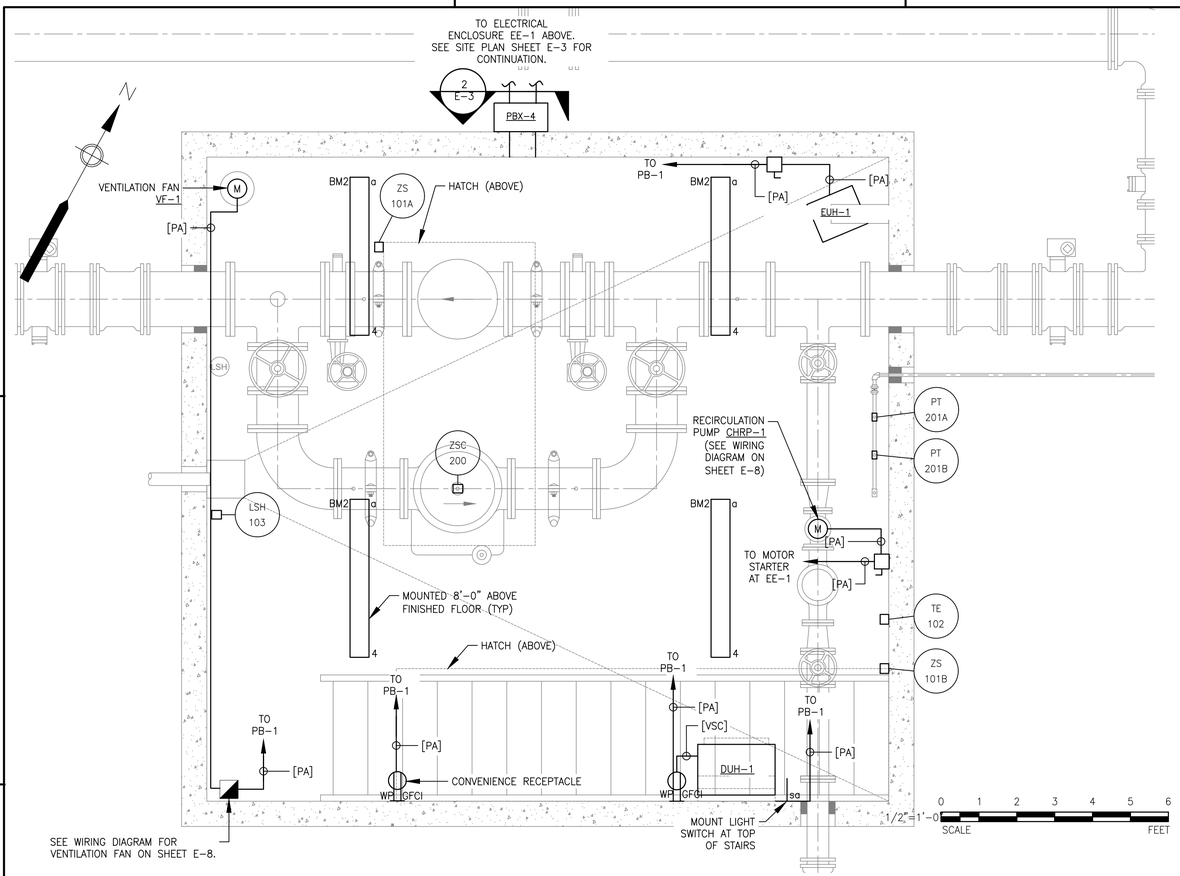

ALTITUDE VALVE VAULT – PART PLAN

SCALE: 1/2" = 1'-0"

NOTES:

1. MOUNT ALL RECEPTACLES, SWITCHES, ELECTRICAL AND HVAC EQUIPMENT AT A MINIMUM OF 3 FEET ABOVE VAULT FLOOR.
2. PROVIDE CONNECTION FOR PORTABLE GENERATOR IN ACCORDANCE WITH THE CITY OF MIDDLETOWN STANDARDS. COORDINATE WITH WATER DEPARTMENT ELECTRICIAN.
3. REFER TO INSTRUMENTATION DRAWINGS AND MECHANICAL DRAWINGS M-107 AND M-108 FOR DETAILS.
4. FOR SERVICE POLE AND DUCT BANK SECTION DETAILS SEE SHEET E-8.

PHASE A LOAD	12.0	KVA	PB-1				VOLTAGE			240/120V, 1PH 3W, 60HZ
PHASE B LOAD	8.8	KVA					MAIN			200 A TRIP
	0.0		SPD				SHORT CKT BRACING			10,000 AMPS
TOTAL LOAD	20.8	KVA					ENCLOSURE			SURFACE MOUNTED AT EE-1
LOAD	VA	TRIP	POLES	CKT	PHASE	CKT	POLES	TRIP	VA	LOAD
EE-1 HEATER*	1,500	20	1	1	A	2	1	20	800	VAULT RECEPTACLE*
VAULT RECPT. DUH-1 *	510	20	1	3	B	4	1	20	216	VAULT LIGHTS*
SRAY NOZZLE PUMP SN.P-1 (5 HP)	3700	40	2	5	A	6	1	20	162	TANK FLOOD LIGHTS
				7	B	8	1	20	1000	CHERRY HILL PLC
EUH-1* (3 KW)	3000	20	2	9	A	10	1	20	34	RECPT. EE-1*
				11	B	12	1	20	200	EE-1 FLOODLIGHT
BLOWER BLW-1 (2 HP)	3120	30	2	13	A	14	1	20	500	VENTILATION FAN
				15	B	16	1	20	960	MIXER MIX-1 (1/2 HP)
VAULT RECPT. *	800	20	1	17	A	18	2	20	3000	RECIRC PUMP CHRP-1
EE-1 LIGHT – POWER	50	20	1	19	A	20				
EE-1 LIGHT – CONTROL	50	20	1	21	B	22	1	20	1000	BLOWER FAN
SPARE		20	1	23	A	24	1	20	210	TANK RECEPTACLE*
SPARE		20	1	25	B	26	1	20		SPARE
SPARE		20	1	27	A	28	1	20		SPARE
SPARE		20	2	29	B	30	1	20		SPARE
				31	A	32	1	20		SPARE
SPARE		20	1	33	B	34	1	20		SPARE
SPACE		20	1	35	A	36	1	20		SPACE
SPACE		20	1	37	B	38	1	20		SPACE
SPACE		20	1	39	A	40	1	20		SPACE
SPACE		20	1	41	B	42	1	20		SPACE

* PROVIDE GFCI CIRCUIT BREAKER

PB-1 PANELBOARD SCHEDULE

SCALE:NTS

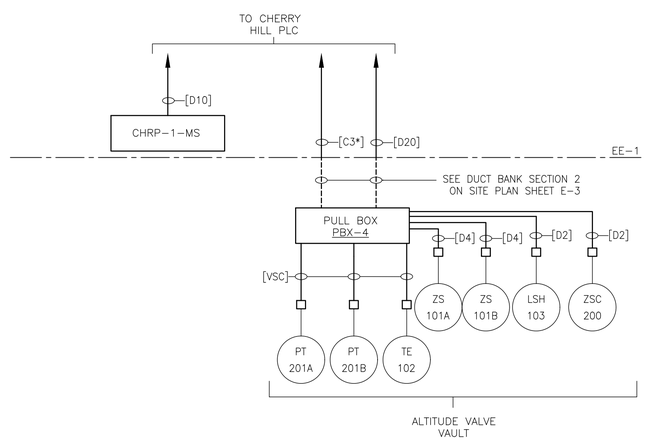

ALTITUDE VALVE VAULT – RISER DIAGRAMS

SCALE:NTS

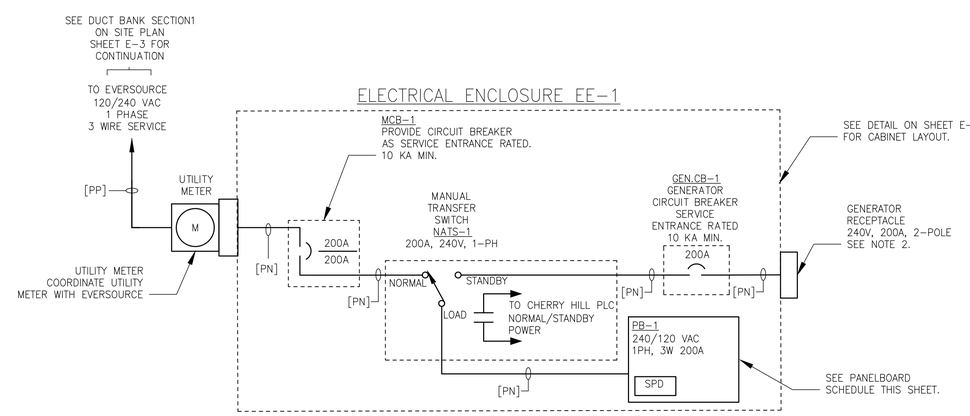

ALTITUDE VAULT – ONE-LINE DIAGRAM

SCALE:NTS

100% SUBMITTAL

REVISIONS

MARK	DATE	MADE BY	CHECKED	DESCRIPTION

AECOM, INC.
250 APPLEWOOD DRIVE
ROCKY HILL, CT 06067
PHONE (860) 263-3800

AECOM

STATE OF CONNECTICUT No. 27954 PROFESSIONAL ENGINEER LICENSE

EPA CONTRACT NO. EP-S1-06-01
DURHAM MEADOWS WATERLINE RD
DURHAM AND MIDDLETOWN, CONNECTICUT
TASK ORDER NO. 0060-RD-RD-01D5

ALTITUDE VALVE VAULT PLANS AND DIAGRAMS

ELECTRICAL

PROJECT NO:	60275749
CAD DWG FILE:	E-5
DESIGNED BY:	AA
DRAWN BY:	AA
DEPT CHECK:	YR
PROJ CHECK:	MWM
DATE:	APRIL 2018
SCALE:	

E-5

ANSI D – 2-May-18

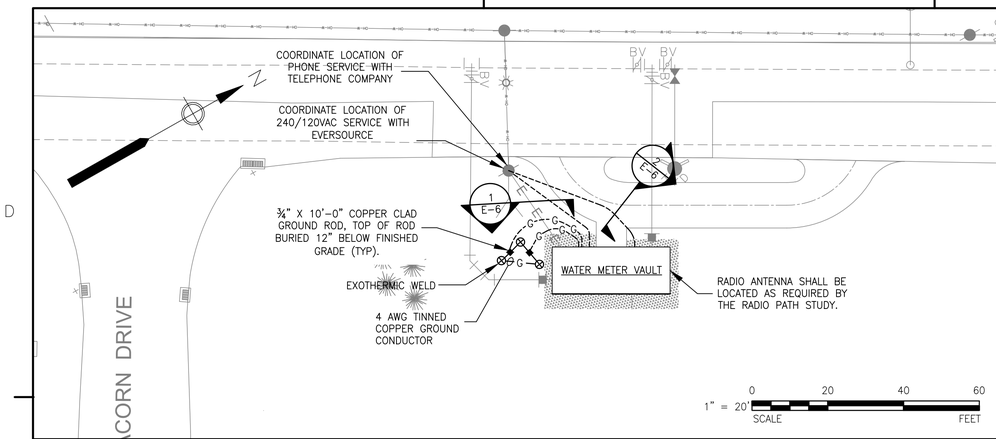

WATER METER VAULT – ELECTRICAL SITE PLAN

SCALE: 1" = 20'-0"

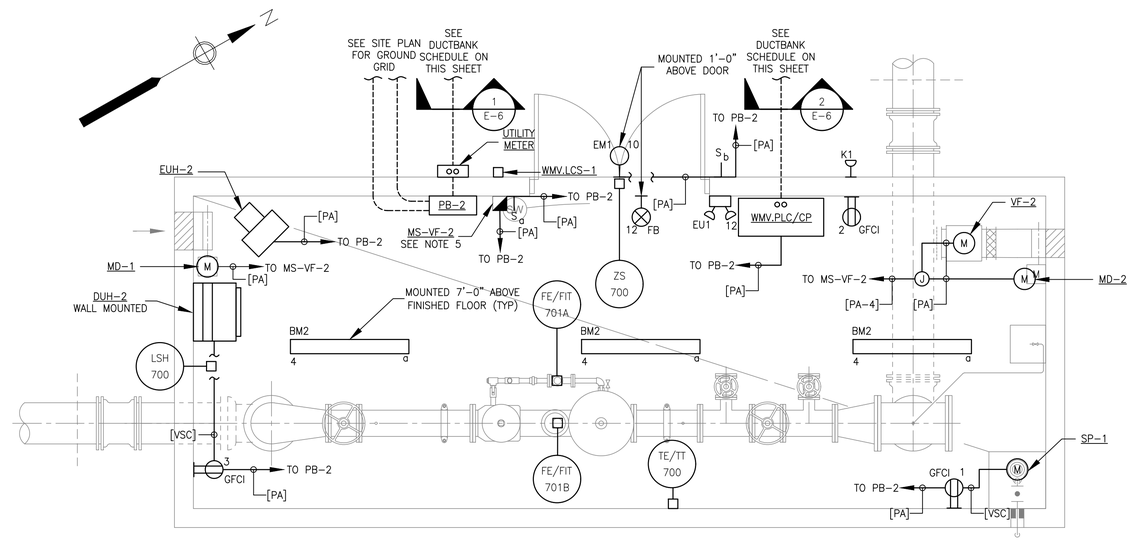

NOTES:

1. PROVIDE SUMP PUMP WITH COMBINATION DISCONNECT SWITCH AND PLUG RATED FOR 20A.
2. MOUNT ALL RECEPTACLES, SWITCHES, ELECTRICAL AND HVAC EQUIPMENT A MINIMUM OF 3' ABOVE VAULT FLOOR.
3. FOR SERVICE POLE AND DUCT BANK SECTION DETAILS SEE SHEET E-8.
4. REFER TO DRAWING C-11 FOR SITE DETAILS.
5. MANUAL MOTOR STARTER, MS-VF-2, SHALL ENERGIZE MD-1 AND 2 THEN VF-2. SEE WIRING DIAGRAM ON SHEET E-14.

3/8"=1'-0" SCALE 0 2 4 6 8 FEET

WATER METER VAULT – PART PLAN

SCALE: 3/8" =1'-0"

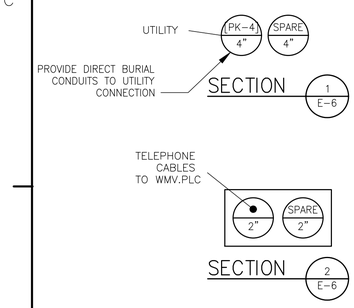

WATER METER VAULT DUCT BANK SCHEDULE

SCALE: NTS

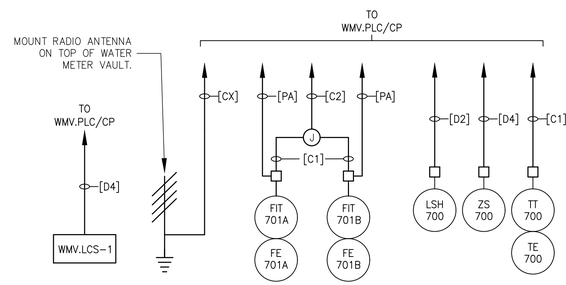

WATER METER VAULT RISER DIAGRAMS

SCALE: NTS

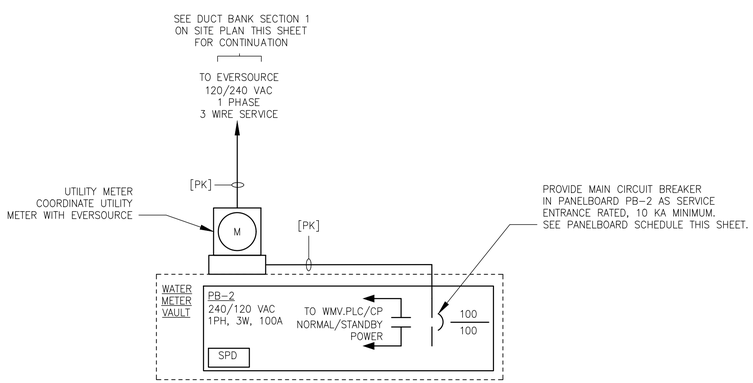

WATER METER VAULT – ONE-LINE DIAGRAM

SCALE:NTS

PHASE A LOAD	3.9	KVA	PB-2				VOLTAGE			240/120V, 1PH 3W, 60HZ
PHASE B LOAD	2.7	KVA					MAIN			100 A TRIP
	0.0		SPD				SHORT CKT BRACING			10,000 AMPS
TOTAL LOAD	6.6	KVA					ENCLOSURE			WALL MOUNTED
LOAD	VA	TRIP	POLES	CKT	PHASE	CKT	POLES	TRIP	VA	LOAD
VAULT RECPT. SUMP SP-1*	1,116	20	1	1	A	2	1	20	240	VAULT RECEPTACLE*
VAULT RECPT. DUH-2*	510	20	1	3	B	4	1	20	135	VAULT LIGHTS*
EUH-2*	3000	20	2	5	A	6	1	20	1000	WMV.PLC/CP*
					B	8	1	20	510	VENTILATION FAN VF-2 & DAMPERS
SPARE		20	2	7	A	10	1	20	50	EXTERIOR LIGHTING
					B	12	1	20	21	EMERGENCY LIGHTING
SPARE		20	1	9	A	14	1	20		SPARE
SPARE		20	1	11	B	16	1	20		SPARE
SPARE		20	1	13	A	18	1	20		SPARE

* PROVIDE 5mA GFCI CIRCUIT BREAKER

PB-2 PANELBOARD SCHEDULE

SCALE:NTS

MARK	DATE	MADE BY	CHECKED	DESCRIPTION
				100% SUBMITTAL

REVISIONS

AECOM, INC.
250 APPLEWOOD DRIVE
ROCKY HILL, CT 06067
PHONE (860) 263-3800

STATE OF CONNECTICUT No. 27954 PROFESSIONAL ENGINEER LICENSE

EPA CONTRACT NO. EP-S1-06-01
DURHAM MEADOWS WATERLINE RD
DURHAM AND MIDDLETOWN, CONNECTICUT
TASK ORDER NO. 0060-RD-RD-01D5

WATER METER VAULT PLANS AND DIAGRAMS

ELECTRICAL

PROJECT NO:	60275749
CAD DWG FILE:	E-6
DESIGNED BY:	JD
DRAWN BY:	JD
DEPT CHECK:	YR
PROJ CHECK:	MWM
DATE:	APRIL 2018
SCALE:	

E-6

ANSI D – 2-May-18

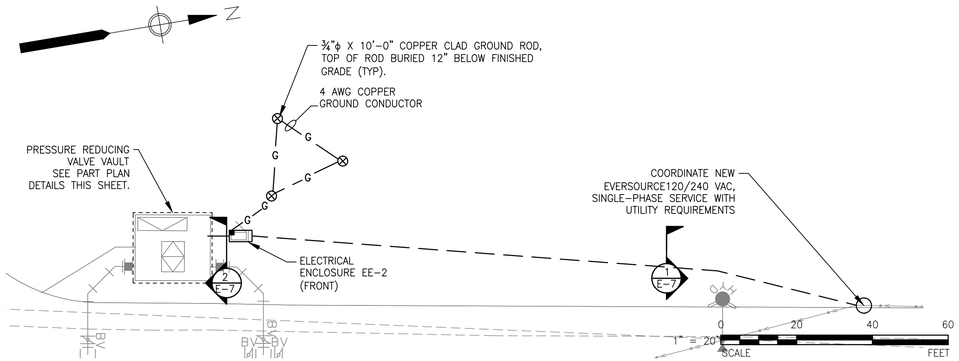

PRESSURE REDUCING VALVE VAULT – ELECTRICAL SITE PLAN

SCALE: 1" = 20'-0"

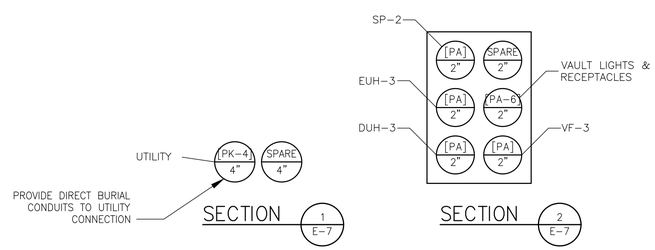

PRESSURE REDUCING VALVE VAULT – DUCT BANK SECTION

SCALE: NTS

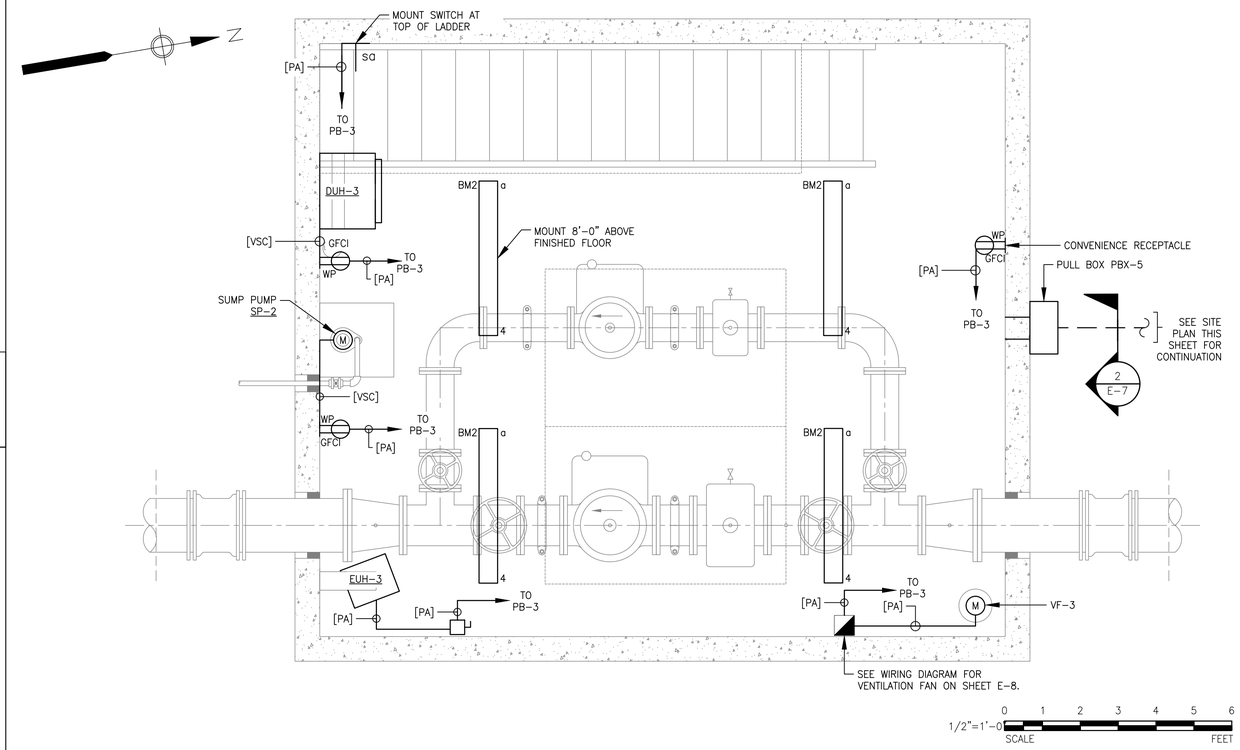

PRESSURE REDUCING VALVE VAULT – PART PLAN

SCALE: 1/2" = 1'-0"

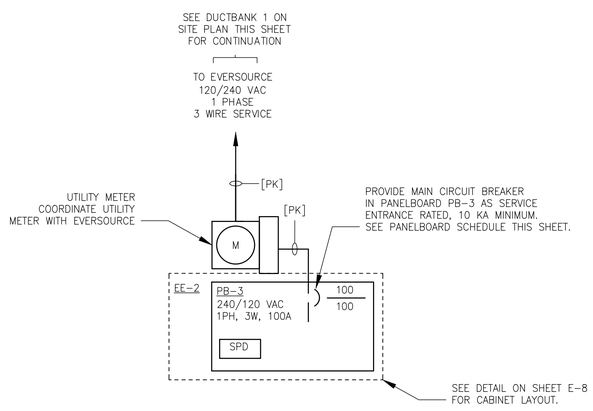

PRESSURE REDUCING VAULT – ONE-LINE DIAGRAM

SCALE:NTS

PHASE A LOAD	4.0	KVA	PB-3				VOLTAGE			240/120V, 1PH 3W, 60HZ
PHASE B LOAD	3.1	KVA					MAIN			100 A TRIP
	0.0		SPD				SHORT CKT BRACING			10,000 AMPS
TOTAL LOAD	7.2	KVA					ENCLOSURE			SURFACE MOUNTED WITHIN EE-2
LOAD	VA	TRIP	POLES	CKT	PHASE	CKT	POLES	TRIP	VA	LOAD
EE-2 HEATER	1,000	20	1	1	A	2	1	20	240	VAULT RECPT. *
VAULT RECPT. DUH-3 *	510	20	1	3	B	4	1	20	800	RECEPTACLE EE-2
SUMP PUMP SP-2 *	1116	20	1	5	A	6	1	20	180	VAULT LIGHTS *
EE-3 LIGHT	34	20	1	7	B	8	2	20		SPARE
EUH-2*	3000	20	2	9	A					
					B	10	1	20	276	VENTILIATION FAN VF-3
SPARE		20	1	11	A	12	1	20		SPARE
SPARE		20	1	13	B	14	1	20		SPARE
SPARE		20	1	15	A	16	1	20		SPARE

*PROVIDE 5 mA GFCI CIRCUIT BREAKER

NOTES:

1. MOUNT ALL SWITCHES, RECEPTACLES, ELECTRICAL AND HVAC EQUIPMENT A MINIMUM OF THREE FEET ABOVE VAULT FLOOR.
2. PROVIDE SUMP PUMP WITH COMBINATION DISCONNECT SWITCH AND PLUG RATED FOR 20A.
3. REFER TO DRAWING M-110 FOR MECHANICAL PLAN AND C-15 FOR CIVIL SITE PLAN.
4. FOR SERVICE POLE AND DUCT BANK SECTION DETAILS SEE SHEET E-8.

PB-3 PANELBOARD SCHEDULE

SCALE:NTS

100% SUBMITTAL

MARK	DATE	MADE BY	CHECKED	DESCRIPTION

REVISIONS

AECOM, INC.
250 APPROACH DRIVE
ROCKY HILL, CT 06067
PHONE (860) 263-3800

AECOM

STATE OF CONNECTICUT
MICHAEL W. MCGUIRE
No. 27994
PROFESSIONAL ENGINEER
May 2, 2018

EPA CONTRACT NO. EP-S1-06-01
DURHAM MEADOWS WATERLINE RD
DURHAM AND MIDDLETOWN, CONNECTICUT
TASK ORDER NO. 0060-RD-RD-0105

PRESSURE REDUCING VAULT PLANS AND DIAGRAMS

ELECTRICAL

PROJECT NO:	60275749
CAD DWG FILE:	E-7
DESIGNED BY:	AA
DRAWN BY:	AA
DEPT CHECK:	YR
PROJ CHECK:	MWM
DATE:	APRIL 2018
SCALE:	

E-7

ANSI D – 2-May-18

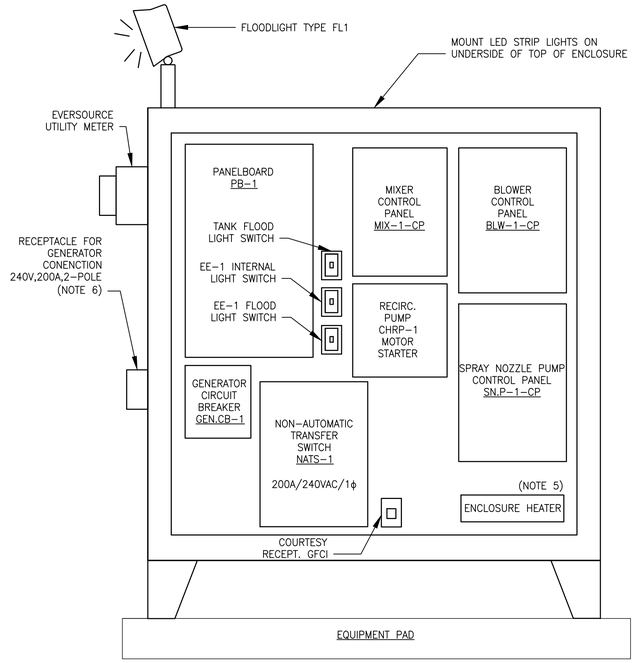

LAYOUT – FRONT

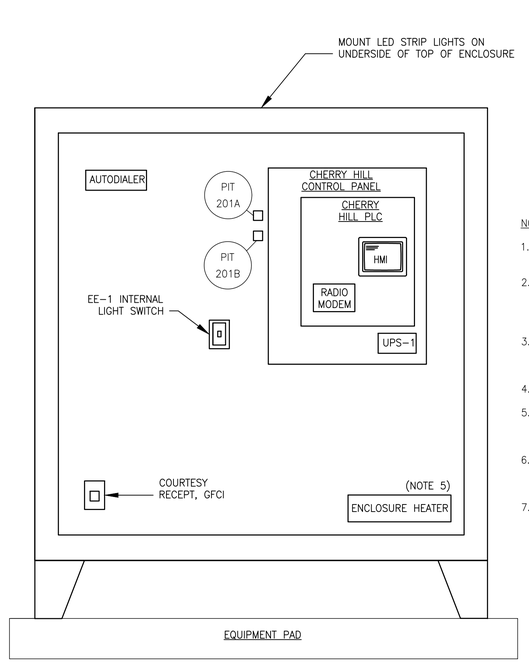

LAYOUT – BACK

NOTES:

1. PROVIDE ENCLOSURE CONSTRUCTED OF 316 STAINLESS STEEL. PROVIDE ENCLOSURE AS A MINIMUM OF 6 FT WIDE.
2. COMPONENT LAYOUT IS FOR FUNCTIONAL PURPOSES ONLY. LAYOUT SHALL BE FINALIZED BY ELECTRICAL CONTRACTOR BASED ON SPECIFIC EQUIPMENT MANUFACTURERS AND MODELS SELECTED.
3. SYSTEM INTEGRATOR TO PURCHASE RADIO EQUIPMENT, PLC AND INSTRUMENTS. ELECTRICAL CONTRACTOR SHALL INSTALL EQUIPMENT IN ACCORDANCE WITH MANUFACTURER REQUIREMENTS.
4. PANEL LAYOUT SHOWN WITH DOORS REMOVED.
5. PROVIDE HEATER SIZED TO MAINTAIN MINIMUM TEMPERATURE AS REQUIRED BY ALL COMPONENTS INSIDE ELECTRICAL ENCLOSURE. PROVIDE HEATER CONTROLLED BY AN ADJUSTABLE THERMOSTAT.
6. PROVIDE CONNECTION FOR GENERATOR IN ACCORDANCE WITH THE CITY OF MIDDLETOWN STANDARDS. COORDINATE WITH THE WATER DEPARTMENT ELECTRICIAN.
7. PROVIDE CLOSED LOOP AIR CONDITIONING AS NEEDED TO MAINTAIN TEMPERATURE WITHIN EQUIPMENT RATINGS. AIR CONDITIONER SHALL BE NEMA 4X STAINLESS STEEL WITH CORROSION PACKAGE.

ELECTRICAL ENCLOSURE EE-1

SCALE: NTS

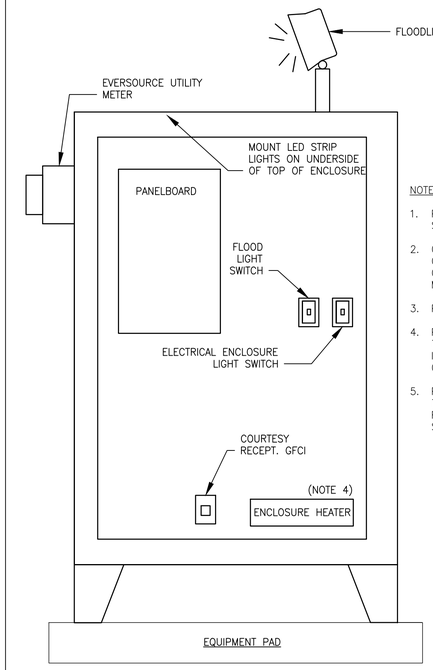

NOTES:

1. PROVIDE ENCLOSURE CONSTRUCTED OF 316 STAINLESS STEEL.
2. COMPONENT LAYOUT IS FOR FUNCTIONAL PURPOSES ONLY. LAYOUT SHALL BE FINALIZED BY ELECTRICAL CONTRACTOR BASED ON SPECIFIC EQUIPMENT MANUFACTURERS AND MODELS SELECTED.
3. PANEL LAYOUT SHOWN WITH DOORS REMOVED.
4. PROVIDE HEATER SIZED TO MAINTAIN MINIMUM TEMPERATURE AS REQUIRED BY ALL COMPONENTS INSIDE ELECTRICAL ENCLOSURE. PROVIDE HEATER CONTROLLED BY AN ADJUSTABLE THERMOSTAT.
5. PROVIDE CLOSED LOOP AIR CONDITIONING AS NEEDED TO MAINTAIN TEMPERATURE WITHIN EQUIPMENT RATINGS. AIR CONDITIONER SHALL BE NEMA 4X STAINLESS STEEL WITH CORROSION PACKAGE.

ELECTRICAL ENCLOSURE EE-2

SCALE: NTS

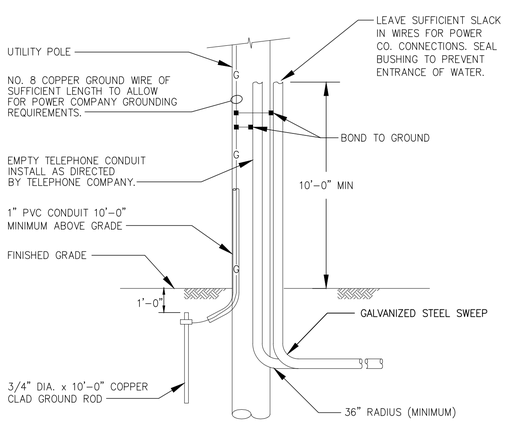

SERVICE POLE WITH DIRECT BURIED CONDUIT

N.T.S.

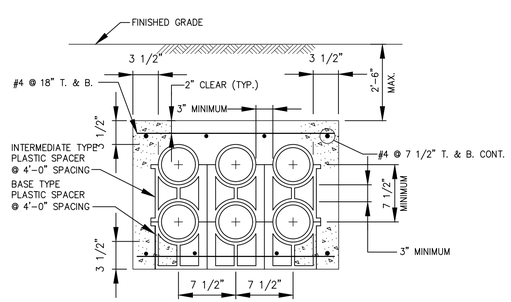

NOTE:

BACKFILL DUCT BANK IN LAYERS AND MANUALLY TAMP OR "PUDDLE"CONCRETE FILL. PROVIDE YELLOW DUCT BANK MARKER TAPES, READING "CAUTION – ELECTRICAL LINES BELOW", OVER ENTIRE LENGTH OF DUCTLINE. LOCATE TAPES 12 INCHES BELOW GRADE. PROVIDE A TAPE FOR EVERY 12 INCHES OF WIDTH OF DUCTLINE.

DUCTBANK SECTION

NTS

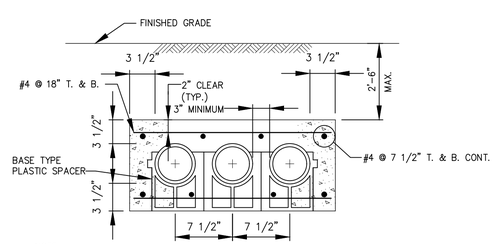

NOTE:

BACKFILL DUCT BANK IN LAYERS AND MANUALLY TAMP OR "PUDDLE" CONCRETE FILL. PROVIDE YELLOW DUCT BANK MARKER TAPES, READING "CAUTION – ELECTRICAL LINES BELOW", OVER ENTIRE LENGTH OF DUCTLINE. LOCATE TAPES 12 INCHES BELOW GRADE. PROVIDE A TAPE FOR EVERY 12 INCHES OF WIDTH OF DUCTLINE.

SINGLE LAYER DUCT BANK SECTION

DETAILS

SCALE: NTS

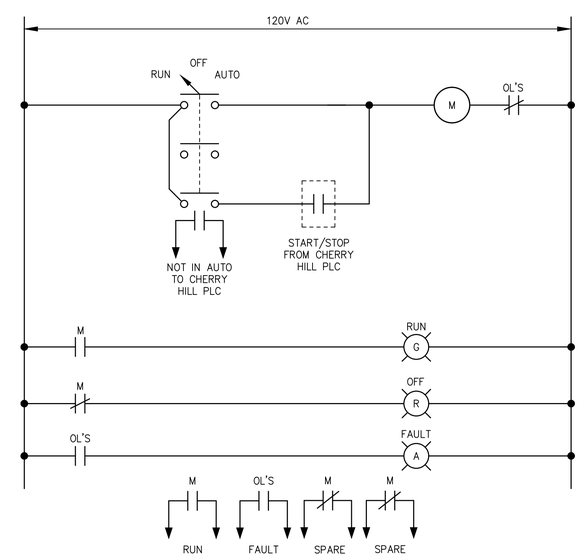

RECIRCULATION PUMP CHRP-1 STARTER WIRING DIAGRAM

(ALL COMPONENTS LOCATED AT MOTOR STARTER UNLESS OTHERWISE NOTED)
(TYPICAL FOR QTY.(3) VENTILATION FANS VF-1 AND VF-3)

WIRING DIAGRAM

SCALE: NTS

MARK	DATE	MADE BY	CHECKED	DESCRIPTION

100% SUBMITTAL

REVISIONS

AECOM, INC.
250 APPLEWOOD DRIVE
ROCKY HILL, CT 06067
PHONE (860) 263-3800

AECOM

STATE OF CONNECTICUT · MATTHEW A. WOLF · No. 27364 · LICENSED PROFESSIONAL ENGINEER

May 2, 2018

EPA CONTRACT NO. EP-S1-06-01
DURHAM MEADOWS WATERLINE RD
DURHAM AND MIDDLETOWN, CONNECTICUT
TASK ORDER NO. 0060-RD-RD-01D5

ELECTRICAL ENCLOSURE LAYOUTS AND DETAILS

ELECTRICAL

PROJECT NO:	60275749
CAD DWG FILE:	E-8
DESIGNED BY:	AA
DRAWN BY:	AA
DEPT CHECK:	YR
PROJ CHECK:	MWM
DATE:	APRIL 2018
SCALE:	

E-8

ANSI D – 2-May-18

BASED ON DRAWING E-3
"ELECTRICAL DEMOLITION & PROPOSED PLANS ONELINE DIAGRAM & SCHEDULE"
BY TATA & HOWARD INC., 02/09.

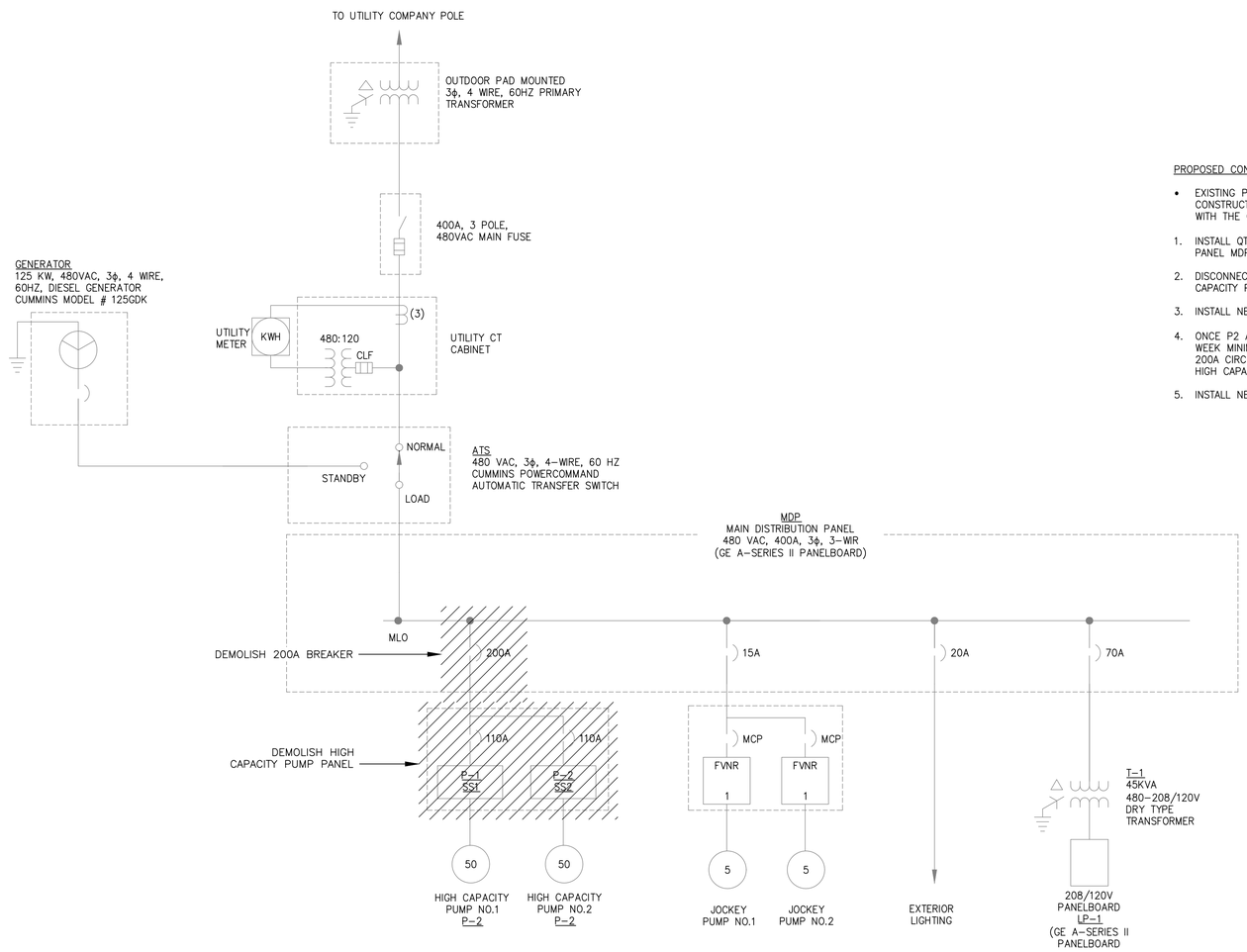

PROPOSED CONSTRUCTION SEQUENCE:

- EXISTING PUMP STATION SHALL REMAIN OPERATIONAL DURING CONSTRUCTION. REQUIRED SHUTDOWNS SHALL BE COORDINATED WITH THE OWNER IN ADVANCE.

1. INSTALL QTY.(2) 100A CIRCUIT BREAKERS AT MAIN DISTRIBUTION PANEL MDP.
2. DISCONNECT EXISTING HIGH CAPACITY PUMP P2 FROM THE HIGH CAPACITY PUMP PANEL.
3. INSTALL NEW VFD FOR PUMP P2 AND BRING ONLINE.
4. ONCE P2 AND NEW VFD HAVE BEEN OPERATIONAL FOR (1) WEEK MINIMUM, DISCONNECT P1 AND DEMOLISH THE EXISTING 200A CIRCUIT BREAKER AT MDP, AND DEMOLISH THE EXISTING HIGH CAPACITY PUMP PANEL.
5. INSTALL NEW VFD FOR P1 AND BRING ONLINE.

LONG HILL PUMP STATION
SINGLE LINE – DEMOLITION

SCALE : NOT TO SCALE

100% SUBMITTAL

MARK	DATE	MADE BY	CHECKED	DESCRIPTION

REVISIONS

AECOM, INC.
250 APPLEWOOD DRIVE
ROCKY HILL, CT 06067
PHONE (860) 263-3800

AECOM

STATE OF CONNECTICUT
No. 27954
LICENSED PROFESSIONAL ENGINEER

EPA CONTRACT NO. EP-S1-06-01
DURHAM MEADOWS WATERLINE RD
DURHAM AND MIDDLETOWN, CONNECTICUT
TASK ORDER NO. 0060-RD-RD-0105

LONG HILL PS
SINGLE LINE DIAGRAM - DEMO
ELECTRICAL

PROJECT NO: 60275749
CAD DWG FILE: E-9
DESIGNED BY: AA
DRAWN BY: AA
DEPT CHECK: YR
PROJ CHECK: MWM
DATE: APRIL 2018
SCALE:

E-9

ANSI D – 2-May-18

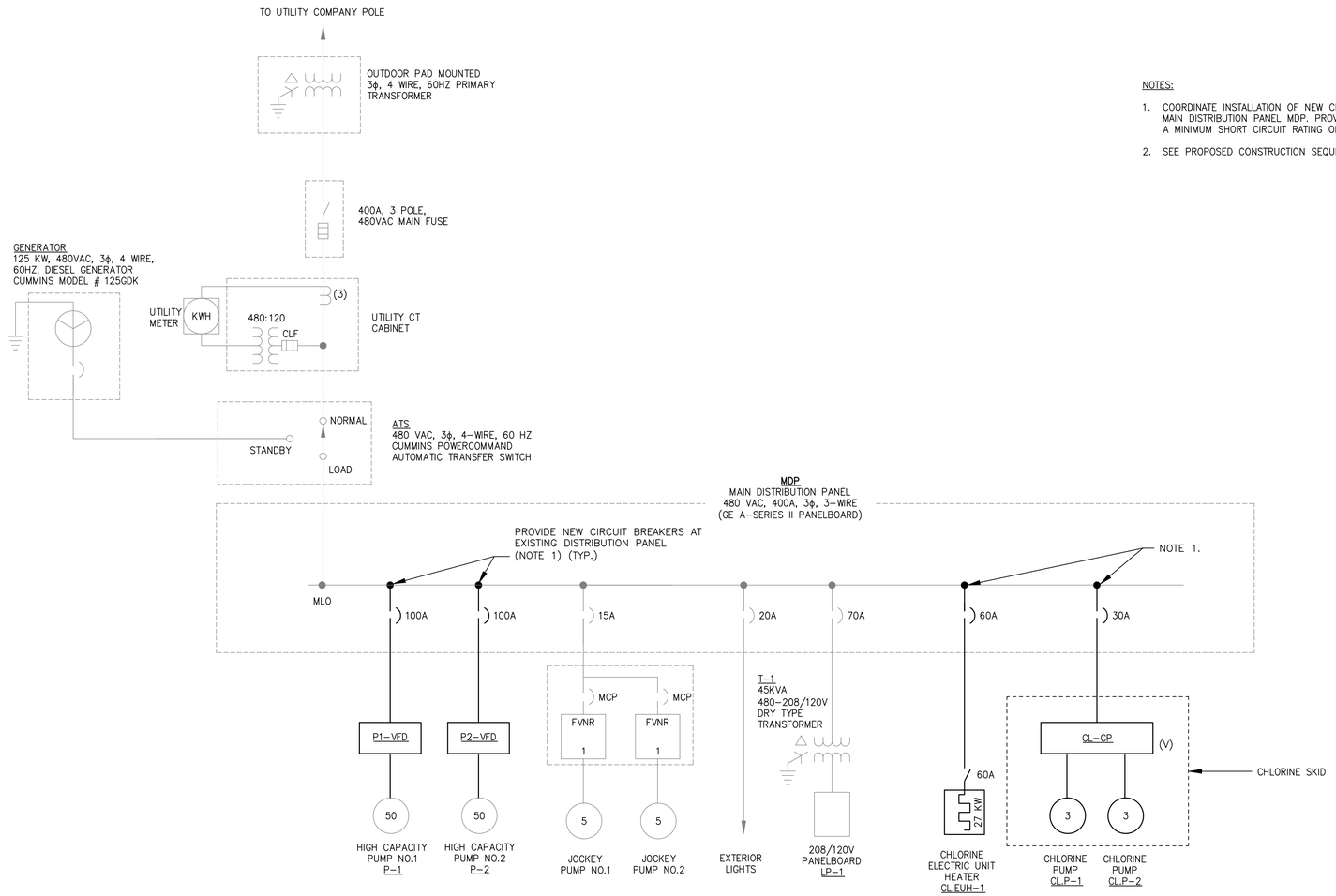

NOTES:

1. COORDINATE INSTALLATION OF NEW CIRCUIT BREAKERS AT EXISTING MAIN DISTRIBUTION PANEL MDP. PROVIDE CIRCUIT BREAKERS WITH A MINIMUM SHORT CIRCUIT RATING OF 35,000 AMPS.
2. SEE PROPOSED CONSTRUCTION SEQUENCE ON SHEET E-9.

LONG HILL PUMP STATION
SINGLE LINE – MODIFICATIONS

SCALE : NOT TO SCALE

100% SUBMITTAL

MARK	DATE	MADE BY	CHECKED	DESCRIPTION

REVISIONS

AECOM, INC.
250 APPROACH DRIVE
ROCKY HILL, CT 06067
PHONE (860) 263-3800

STATE OF CONNECTICUT
MICHAEL W. MAGUIRE
No. 27754
LICENSED PROFESSIONAL ENGINEER

EPA CONTRACT NO. EP-S1-06-01
DURHAM MEADOWS WATERLINE RD
DURHAM AND MIDDLETOWN, CONNECTICUT
TASK ORDER NO. 0060-RD-RD-01D5

LONG HILL PS
SINGLE LINE DIAGRAM - MODIFICATIONS
ELECTRICAL

PROJECT NO:	60275749
CAD DWG FILE:	E-10
DESIGNED BY:	AA
DRAWN BY:	AA
DEPT CHECK:	YR
PROJ CHECK:	MWM
DATE:	APRIL 2018
SCALE:	

E-10

ANSI D – 2-May-18

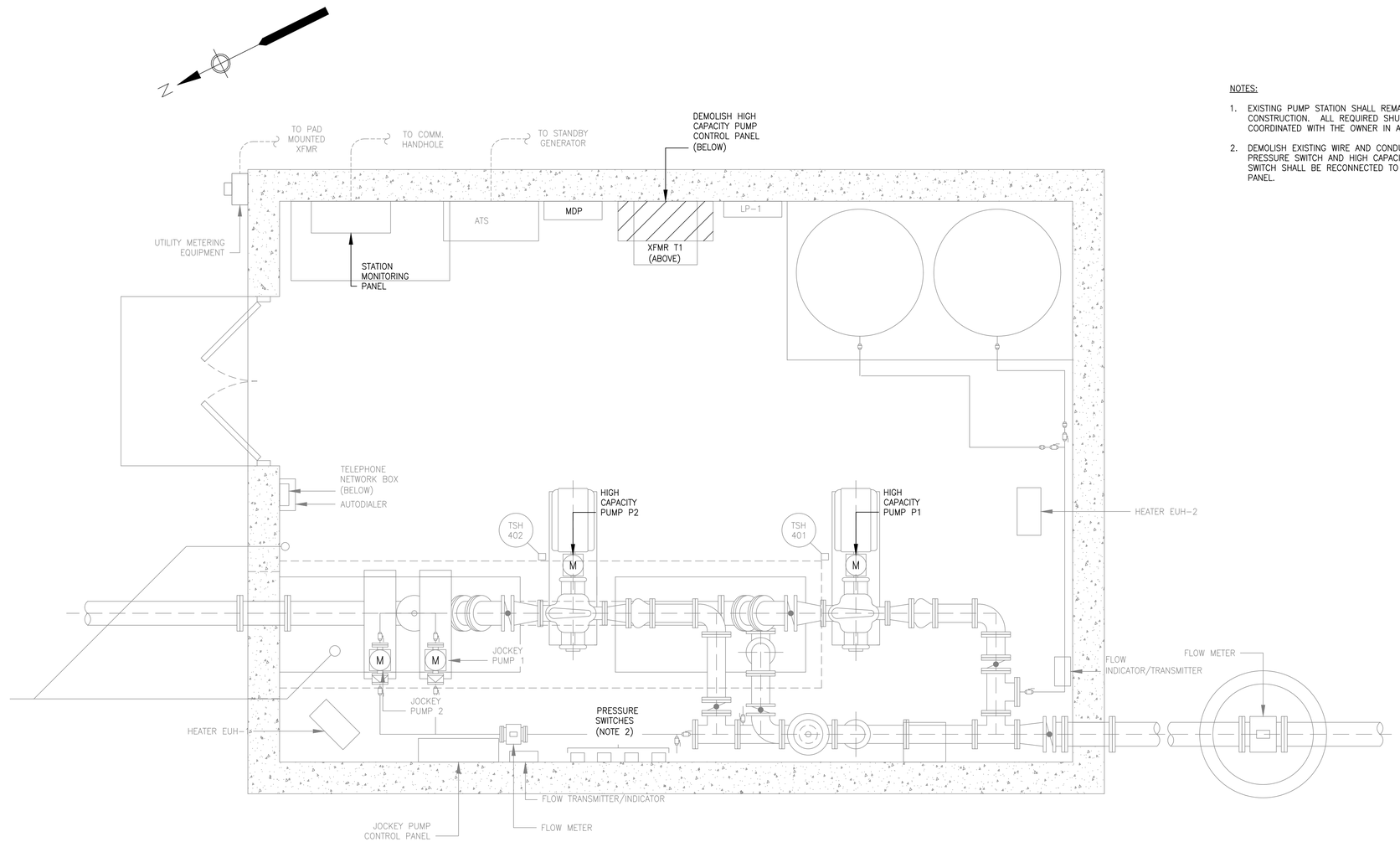

LONG HILL PUMP STATION – DEMOLITION PLAN

SCALE:1/2" = 1'-0"

NOTES:

1. EXISTING PUMP STATION SHALL REMAIN OPERATIONAL DURING CONSTRUCTION. ALL REQUIRED SHUTDOWNS SHALL BE COORDINATED WITH THE OWNER IN ADVANCE.
2. DEMOLISH EXISTING WIRE AND CONDUIT BETWEEN EXISTING PRESSURE SWITCH AND HIGH CAPACITY PUMP PANEL. PRESSURE SWITCH SHALL BE RECONNECTED TO THE STATION MONITORING PANEL.

1/2"=1'-0" SCALE 0 1 2 3 4 5 6 FEET

100% SUBMITTAL

MARK	DATE	MADE BY	CHECKED	DESCRIPTION

REVISIONS

AECOM, INC.
250 APPLEWOOD DRIVE
ROCKY HILL, CT 06067
PHONE (860) 263-3800

AECOM

STATE OF CONNECTICUT REGISTERED PROFESSIONAL ENGINEER No. 27954 LICENSED

EPA CONTRACT NO. EP-S1-06-01
DURHAM MEADOWS WATERLINE RD
DURHAM AND MIDDLETOWN, CONNECTICUT
TASK ORDER NO. 0060-RD-RD-01D5

LONG HILL PS
ELECTRICAL DEMO PLAN

ELECTRICAL

PROJECT NO:	60275749
CAD DWG FILE:	E-11
DESIGNED BY:	AA
DRAWN BY:	AA
DEPT CHECK:	YR
PROJ CHECK:	MWM
DATE:	APRIL 2018
SCALE:	

E-11

ANSI D – 2-May-18

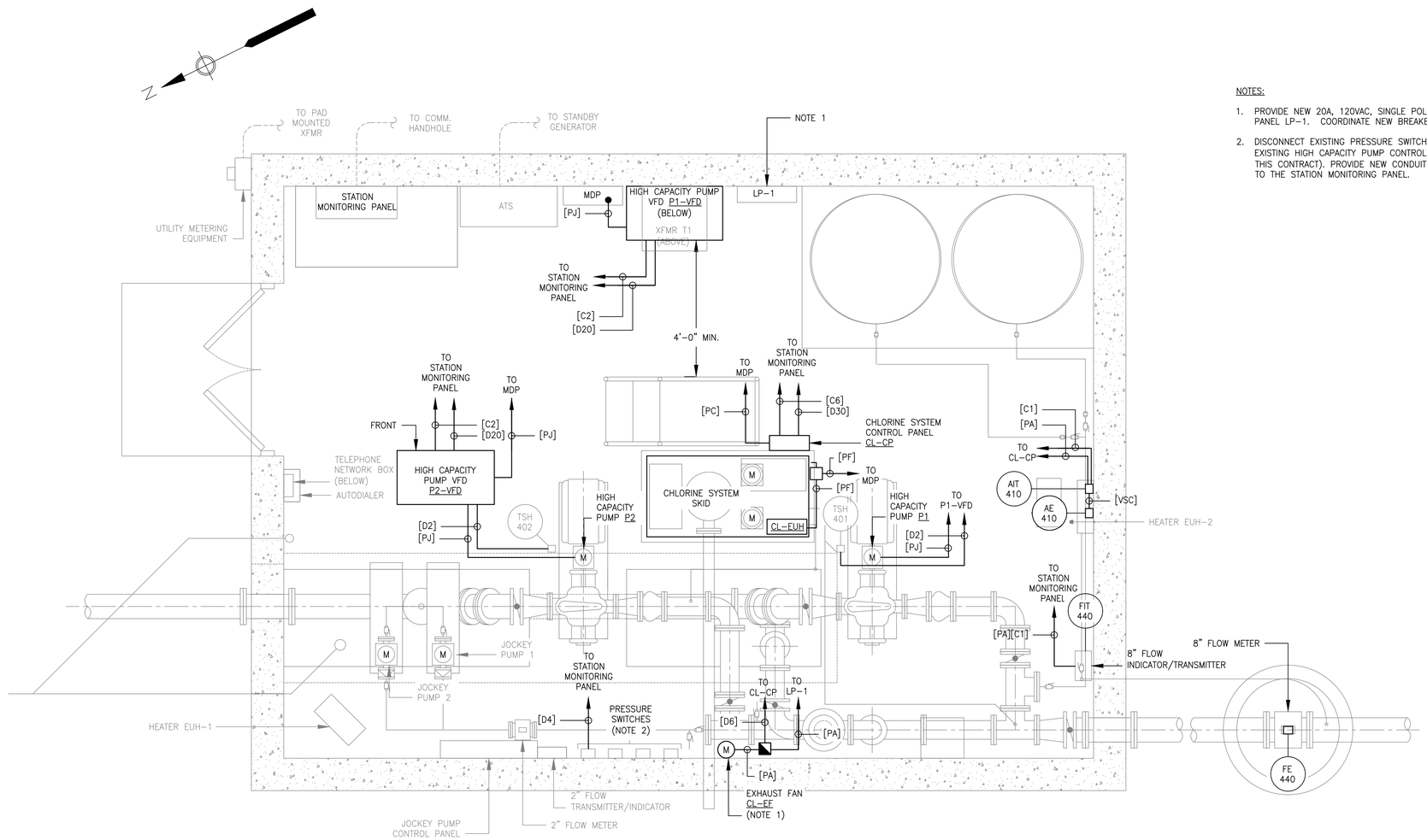

LONG HILL PUMP STATION – POWER PLAN

SCALE:1/2" = 1'-0"

NOTES:

1. PROVIDE NEW 20A, 120VAC, SINGLE POLE CIRCUIT BREAKER AT LIGHTING PANEL LP-1. COORDINATE NEW BREAKER WITH EXISTING PANELBOARD.
2. DISCONNECT EXISTING PRESSURE SWITCH THAT IS TERMINATED AT THE EXISTING HIGH CAPACITY PUMP CONTROL PANEL (TO BE DEMOLISHED UNDER THIS CONTRACT). PROVIDE NEW CONDUIT AND WIRE FROM PRESSURE SWITCH TO THE STATION MONITORING PANEL.

1/2"=1'-0 SCALE 0 1 2 3 4 5 6 FEET

100% SUBMITTAL

MARK	DATE	MADE BY	CHECKED	DESCRIPTION

REVISIONS

AECOM, INC.
250 APPROACH DRIVE
ROCKY HILL, CT 06067
PHONE (860) 263-3800

STATE OF CONNECTICUT LICENSED PROFESSIONAL ENGINEER No. 27954

EPA CONTRACT NO. EP-S1-06-01
DURHAM MEADOWS WATERLINE RD
DURHAM AND MIDDLETOWN, CONNECTICUT
TASK ORDER NO. 0060-RD-RD-01D5

LONG HILL PS
ELECTRICAL POWER PLAN

ELECTRICAL

PROJECT NO:	60275749
CAD DWG FILE:	E-12
DESIGNED BY:	AA
DRAWN BY:	AA
DEPT CHECK:	YR
PROJ CHECK:	MWM
DATE:	APRIL 2018
SCALE:	

E-12

ANSI D – 2-May-18

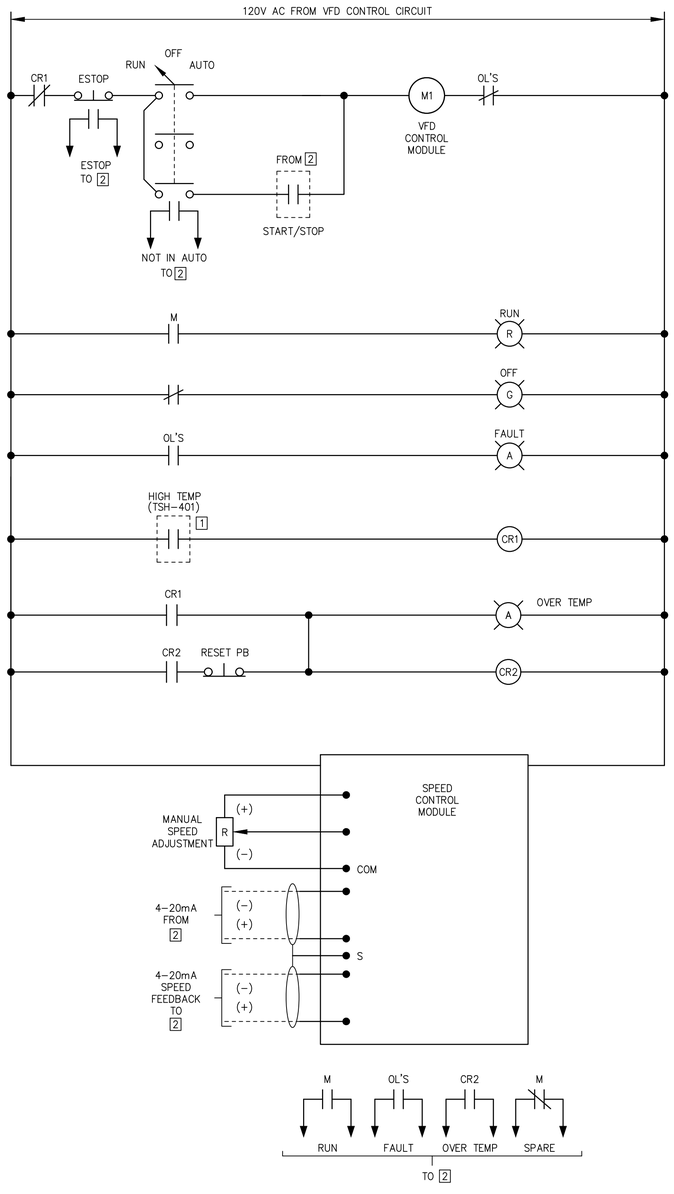

HIGH CAPACITY PUMP VFD
P1-VFD
WIRING DIAGRAM
(TYPICAL OF P2-VFD)
(ALL COMPONENTS LOCATED AT VFD UNLESS OTHERWISE NOTED)

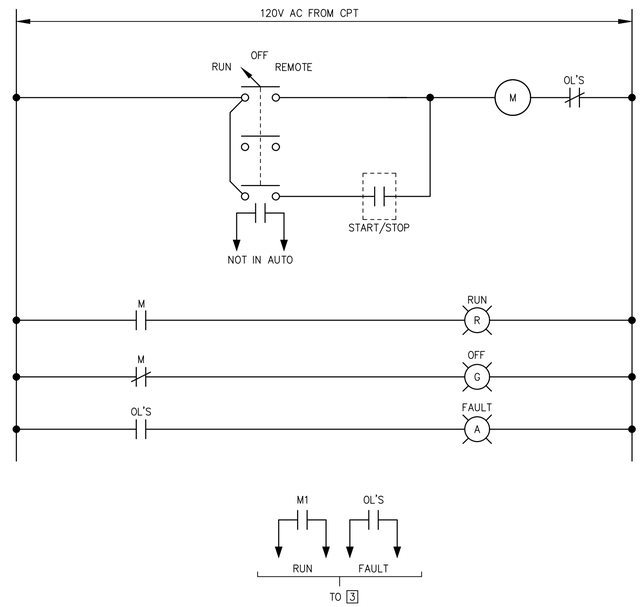

EXHAUST FAN CL-EF
STARTER WIRING DIAGRAM

LONG HILL PUMP STATION – WIRING SCHEMATICS

SCALE: NOT TO SCALE

1 DEVICE LOCATED AT EQUIPMENT
2 STATION MONITORING PANEL
3 CHLORINE SYSTEM CONTROL PANEL

100% SUBMITTAL

MARK	DATE	MADE BY	CHECKED	DESCRIPTION

REVISIONS

AECOM, INC.
250 APPLEWOOD DRIVE
ROCKY HILL, CT 06067
PHONE (860) 263-3800

AECOM

STATE OF CONNECTICUT
No. 27954
LICENSED PROFESSIONAL ENGINEER

EPA CONTRACT NO. EP-S1-06-01
DURHAM MEADOWS WATERLINE RD
DURHAM AND MIDDLETOWN, CONNECTICUT
TASK ORDER NO. 0060-RD-RD-01D5

LONG HILL PS
WIRING SCHEMATICS
ELECTRICAL

PROJECT NO:	60275749
CAD DWG FILE:	E-13
DESIGNED BY:	AA
DRAWN BY:	AA
DEPT CHECK:	YR
PROJ CHECK:	MWM
DATE:	APRIL 2018
SCALE:	

E-13

ANSI D – 2-May-18

NOTES:

1. COORDINATE NEW ELECTRICAL SERVICE AND UTILITY METERING REQUIREMENTS WITH EVERSOURCE.
2. ELECTRICAL UTILITY SERVICE TO TALCOTT RIDGE BOOSTER STATION SHALL BE 480/277VAC, 3 PH, 4 WIRE, 60 HZ.

LEGEND:

SPD — SURGE PROTECTION DEVICE.

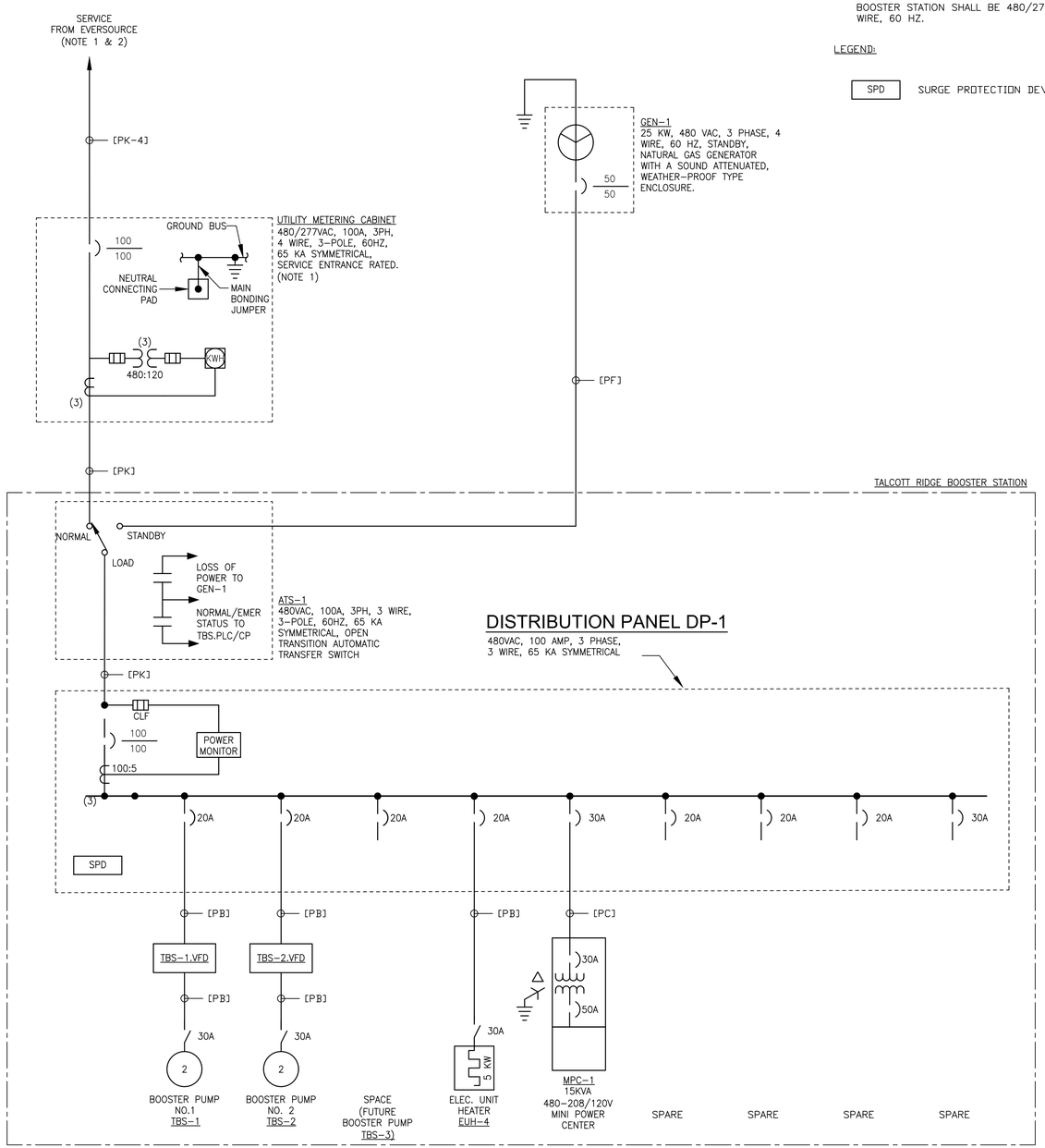

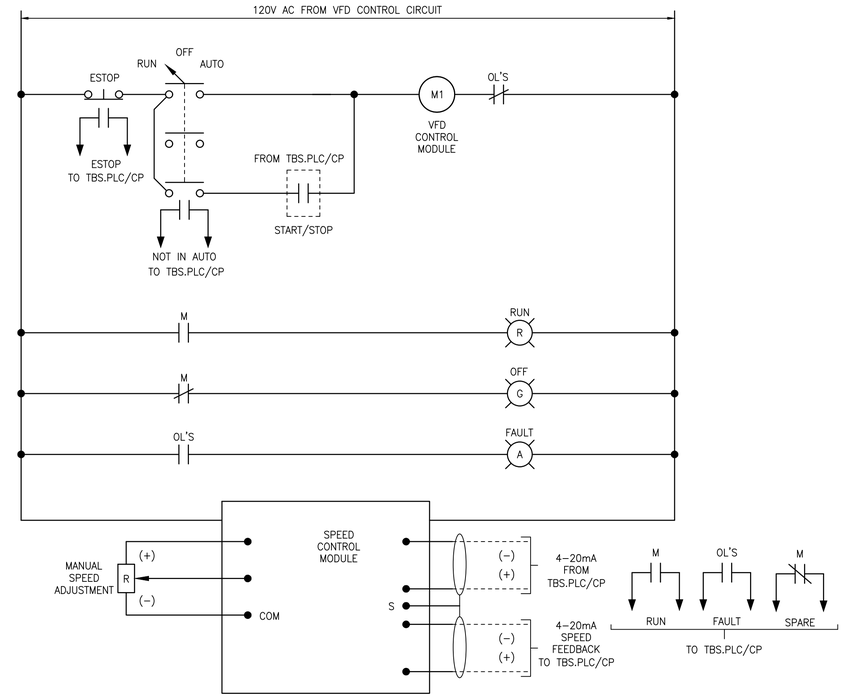

TALCOTT BOOSTER PUMP VFD
TBS-1.VFD
WIRING DIAGRAM

(TYPICAL OF TBS-2.VFD)
(ALL COMPONENTS LOCATED AT VFD UNLESS OTHERWISE NOTED)

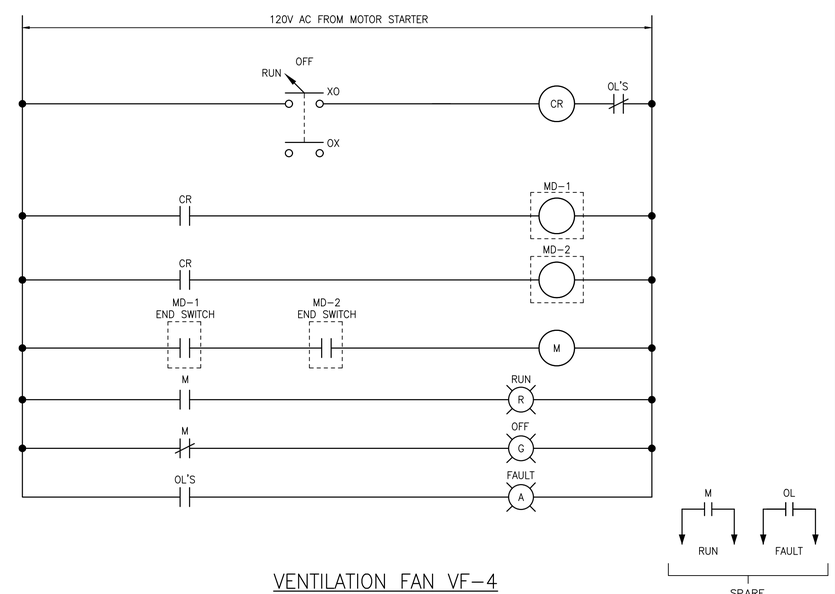

VENTILATION FAN VF-4
WIRING DIAGRAM

(TYPICAL OF VF-2)
(ALL COMPONENTS LOCATED AT VFD UNLESS OTHERWISE NOTED)

MARK	DATE	MADE BY	CHECKED	DESCRIPTION

REVISIONS

100% SUBMITTAL

AECOM, INC.
250 APPLEWOOD DRIVE
ROCKY HILL, CT 06067
PHONE (860) 263-3800

AECOM

EPA CONTRACT NO. EP-S1-06-01
DURHAM MEADOWS WATERLINE RD
DURHAM AND MIDDLETOWN, CONNECTICUT
TASK ORDER NO. 0060-RD-RD-0105

TALCOTT RIDGE BOOSTER STATION
SINGLE LINE DIAGRAM AND SCHEMATICS
ELECTRICAL

PROJECT NO:	60275749
CAD DWG FILE:	E-14
DESIGNED BY:	JD
DRAWN BY:	JD
DEPT CHECK:	YR
PROJ CHECK:	MWM
DATE:	APRIL 2018
SCALE:	

E-14

ANSI D - 2-May-18

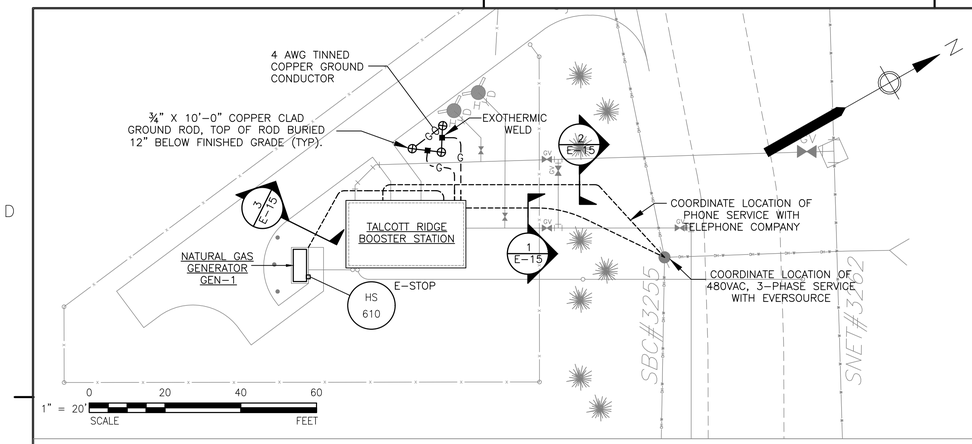

TALCOTT BOOSTER STATION – ELECTRICAL SITE PLAN

SCALE: 1" = 20'-0"

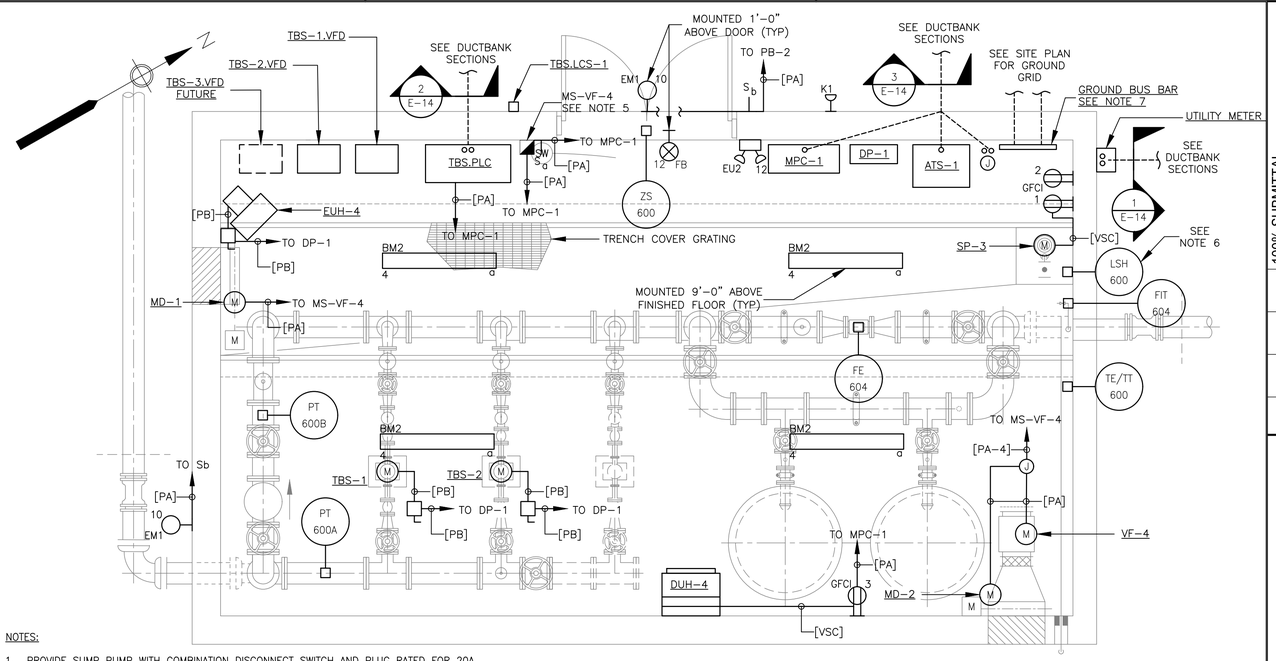

NOTES:

1. PROVIDE SUMP PUMP WITH COMBINATION DISCONNECT SWITCH AND PLUG RATED FOR 20A.
2. MOUNT ALL RECEPTACLES, SWITCHES, ELECTRICAL AND HVAC EQUIPMENT A MINIMUM OF 3' ABOVE FLOOR.
3. FOR SERVICE POLE AND DUCT BANK SECTION DETAILS SEE SHEET E-8.
4. REFER TO DRAWING C-9 FOR SITE DETAILS.
5. MANUAL MOTOR STARTER, MS-VF-4, SHALL ENERGIZE MD-1 AND 2 THEN VF-4. SEE WIRING DIAGRAM ON SHEET E-14.
6. HIGH LEVEL SWITCH SHALL BE INSTALLED IN TRENCH UNDERNEATH GRATING.
7. SEE SHEET E-2 FOR GROUNDING SCHEDULE.

3/8"=1'-0" SCALE FEET

TALCOTT BOOSTER STATION – POWER AND SYSTEMS PLAN

SCALE: 3/8" =1'-0"

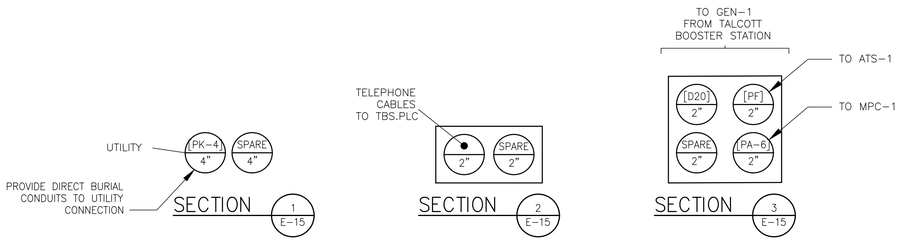

TALCOTT BOOSTER STATION – DUCT BANK SCHEDULE

SCALE: NTS

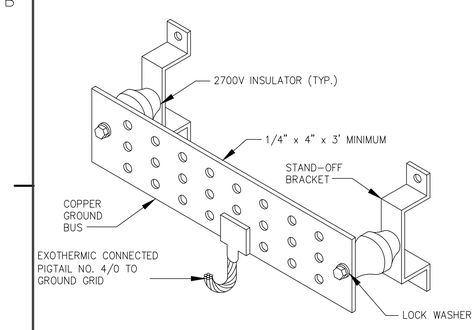

INSULATED GROUND BAR DETAIL

NTS

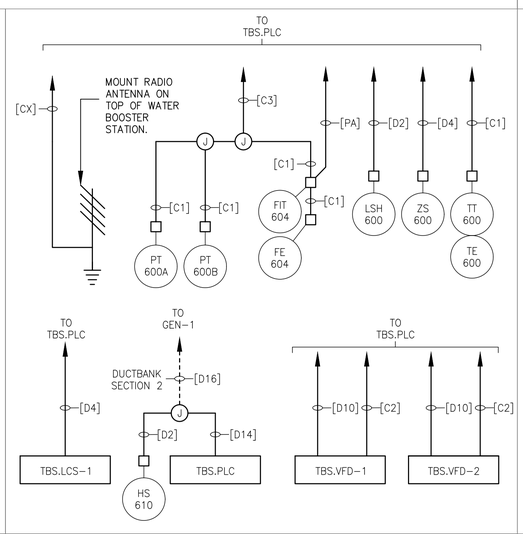

TALCOTT BOOSTER STATION DETAILS

SCALE:NTS

TALCOTT BOOSTER STATION RISER DIAGRAMS

SCALE:NTS

PHASE A LOAD	3.4	KVA	MPC-1				VOLTAGE			208/120V, 1PH 4W, 60HZ
PHASE B LOAD	1.8	KVA					MAIN			100 A TRIP
PHASE C LOAD	2.0	KVA	SPD				SHORT CKT BRACING			10,000 AMPS
TOTAL LOAD	7.2	KVA					ENCLOSURE			WALL MOUNTED, TYPE 3R ENCLOSURE
LOAD	VA	TRIP	POLES	CKT	PHASE	CKT	POLES	TRIP	VA	LOAD
TBS RECPT. SUMP SP-3*	1,116	20	1	1	A	2	1	20	800	TBS RECEPTACLE*
GEN-1 BATTERY HEATER/CHGR	1,500	20	1	3	B	4	1	20	180	TBS LIGHTS*
GEN-1 BLOCK HEATER	1,500	20	1	5	C	6	1	20	510	VENTILATION FAN VF-4 & DAMPER
TBS RECEPT. DUH-4*	510	20	1	7	A	8	1	20	1,000	TBS.PLC/CP
SPARE		20	2	9	B	10	1	20	100	EXTERIOR LIGHTING
				11	C	12	1	20	21	EMERGENCY LIGHTING
SPARE		20	1	13	A	14	1	20		SPARE
SPARE		20	1	15	B	16	1	20		SPARE
SPARE		20	1	16	C	18	1	20		SPARE

* PROVIDE 5mA GFCI CIRCUIT BREAKER

MPC-1 PANELBOARD SCHEDULE

SCALE:NTS

MARK	DATE	MADE BY	CHECKED	DESCRIPTION
				100% SUBMITTAL

REVISIONS

AECOM, INC.
250 APPLEWOOD DRIVE
ROCKY HILL, CT 06067
PHONE (860) 263-3800

EPA CONTRACT NO. EP-S1-06-01
DURHAM MEADOWS WATERLINE RD
DURHAM AND MIDDLETOWN, CONNECTICUT
TASK ORDER NO. 0060-RD-RD-0105

TALCOTT RIDGE BOOSTER STATION PLANS AND DIAGRAMS

ELECTRICAL

PROJECT NO:	60275749
CAD DWG FILE:	E-15
DESIGNED BY:	JD
DRAWN BY:	JD
DEPT CHECK:	YR
PROJ CHECK:	MWM
DATE:	APRIL 2018
SCALE:	

E-15

ANSI D – 2-May-18