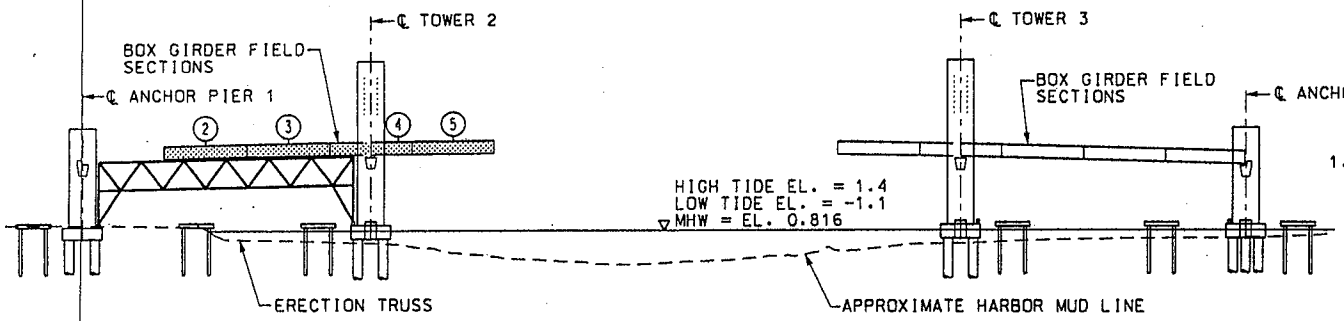

STEP 6 (ELEVATION)

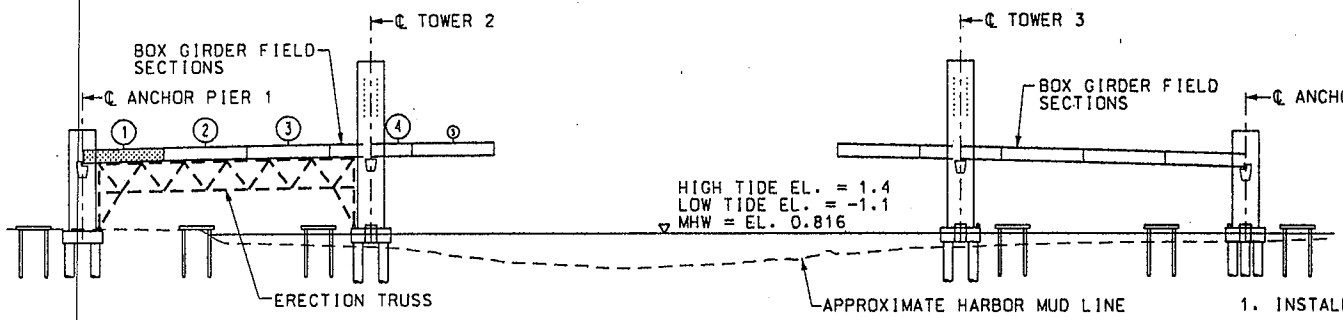

STEP 7 (ELEVATION)

STEP 6

1. INSTALL FIELD SECTIONS 2, 3, 4, AND 5 FOR FIRST GIRDER ON TOP OF ERECTION TRUSS. BOX GIRDERS SHALL HAVE THE TRANSVERSE TOP FLANGE BRACING IN PLACE TO PREVENT DISTORTION AND OVERSTRESS DURING ERECTION. ROLL FIELD SECTIONS INTO FINAL POSITION.

STEP 7

1. INSTALL FIELD SECTION 1.
2. AFTER FIELD SECTIONS 1 & 2 ARE FITTED AND BOLTED TOGETHER, ROLL TRUSS TO THE OTHER GIRDERS. THE ERECTION SEQUENCE IS REPEATED TO OTHER GIRDER LINES.
3. TRANSVERSE FRAMES SHALL BE FITTED AND INSTALLED AS GIRDERS REACH THEIR FINAL POSITION.
4. EDGE BOXES ARE ERECTED IN SPAN 1 USING ERECTION TRUSS WORKING PLATFORMS.
5. AFTER THE SPAN 1 GIRDERS ARE IN PLACE, THE ERECTION TRUSS IS LEFT IN PLACE UNTIL STAGE 4 FOR SOUTH BRIDGE CONSTRUCTION OF SPAN 1.
6. CAST BALLAST CONCRETE IN BOX GIRDERS AT ANCHOR PIER 1.

FOR SPANS 1 & 3 ERECTION DETAILS, SEE DRAWINGS "SPAN 1 & 3 ERECTION PROCEDURES".

◯ DENOTES FIELD SECTION.

SCALE IN METERS

0 20 40 60 80 100

SCALE 1:2000

THE INFORMATION SHOWN ON THIS DRAWING, INCLUDING (AS APPLICABLE) SIZES OF MEMBERS, THE SEQUENCE OF CONSTRUCTION, AND ERECTION PROCEDURES CONVEYS THE ASSUMPTIONS MADE BY THE DESIGNER IN DESIGNING THE STRUCTURE, AND IS FOR INFORMATIONAL USE ONLY. THE CONTRACTOR SHALL BE RESPONSIBLE FOR SELECTING THE MEANS AND METHODS FOR CONSTRUCTION. THE CONTRACTOR SHALL ALSO SUBMIT INFORMATION INCLUDING DESIGN CALCULATIONS, CONSTRUCTION SCHEMATICS, AND CONSTRUCTION SEQUENCES AND PROCEDURES TO THE ENGINEER FOR REVIEW.

STATE OF CONNECTICUT - DEPARTMENT OF TRANSPORTATION		
STATE PROJECT NO. 92-532		
I-95 OVER NEW HAVEN HARBOR REPLACEMENT OF THE PEARL HARBOR MEMORIAL BRIDGE		
FIG. NO. AC-36S	STEEL ALT. - MAIN SPAN STAGE 1A-1B CONSTRUCTION SEQUENCE STEPS 6 & 7	2/06

FIGUREAC36S.DGN

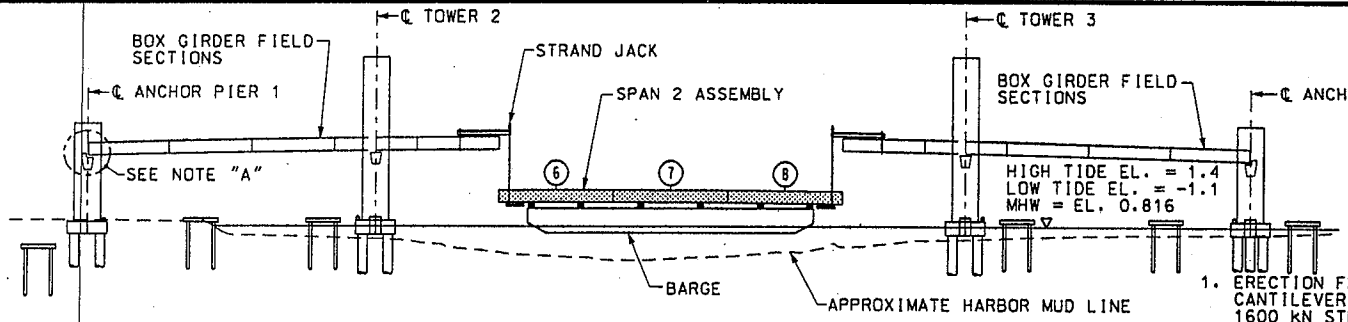

STEP 8 (ELEVATION)

STEP 8

1. ERECTION FRAMES SHALL BE CONSTRUCTED ON THE CANTILEVER ENDS OF THE BOX GIRDERS. SIX 1600 kN STRAND JACKS MOUNTED OVER THE ENDS SHALL LIFT SPAN 2 OFF A BARGE INTO POSITION IN THE REMAINING GAP IN THE BRIDGE.
2. FIELD SECTIONS 6, 7 & 8 OF THE 3 MAIN GIRDERS SHALL BE PRE-ASSEMBLED AS A SINGLE UNIT COMPLETE WITH CROSS FRAMES.
3. THE SPAN 2 ASSEMBLY SHALL BE FLOATED INTO PLACE. THE GIRDERS SHALL BE POSITIONED AND SHALL BE ACCURATELY MOORED UNDER THE SPAN 2 POSITION. NEXT, STRANDS SHALL BE INSTALLED DOWN FROM THE STRAND JACKS TO THE ENDS OF THE SPAN 2 BOX GIRDER ASSEMBLY AND SHALL BE INSTALLED IN STRAND GRIP ASSEMBLIES.
4. THE SPAN 2 ASSEMBLY SHALL BE LIFTED TO ITS FINAL POSITION. THE WEB SPLICES SHALL THEN BE MADE UP, BE FITTED, REAMED AND BOLTED IN PLACE.

NOTE "A": LONGITUDINAL JACKING OF FIELD SECTIONS 1 THRU 5 MAY BE NECESSARY FOR INSTALLATION OF SPAN 2 ASSEMBLY.

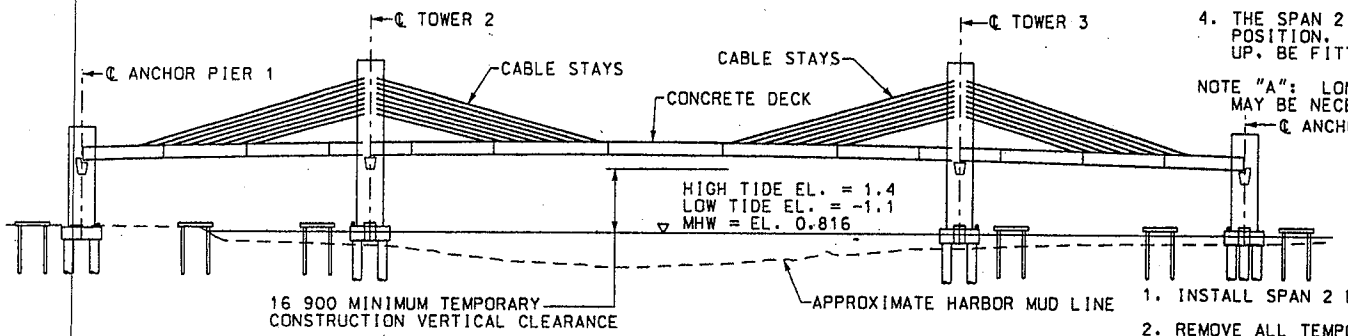

STEP 9 (ELEVATION)

STEP 9

1. INSTALL SPAN 2 EDGE BOXES.
2. REMOVE ALL TEMPORARY LONGITUDINAL RESTRAINTS CONNECTING THE SUPERSTRUCTURE AND THE SUBSTRUCTURE. THE STAY CABLES SHALL NOT BE INSTALLED UNTIL AFTER ANY INSTALLED TEMPORARY LONGITUDINAL RESTRAINTS HAVE BEEN REMOVED.
3. STAY CABLES AT TOWER 2 SHALL BE INSTALLED AND STRESSED PRIOR TO INSTALLING AND STRESSING CABLE STAYS AT TOWER 3.
4. STAY CABLES SHALL BE INSTALLED AND STRESSED IN BALANCED FASHION, FROM BOTTOM TO TOP, ALTERNATING MAIN SPAN AND END SPAN STAY CABLES.
5. FOLLOWING STAY CABLE STRESSING, THE CONCRETE DECK SHALL BE CONSTRUCTED IN ACCORDANCE WITH THE SLAB PLACEMENT SEQUENCE.

◯ DENOTES FIELD SECTION.

SCALE IN METERS

0 20 40 60 80 100

SCALE 1:2000

THE INFORMATION SHOWN ON THIS DRAWING, INCLUDING (AS APPLICABLE) SIZES OF MEMBERS, THE SEQUENCE OF CONSTRUCTION, AND ERECTION PROCEDURES CONVEYS THE ASSUMPTIONS MADE BY THE DESIGNER IN DESIGNING THE STRUCTURE, AND IS FOR INFORMATIONAL USE ONLY. THE CONTRACTOR SHALL BE RESPONSIBLE FOR SELECTING THE MEANS AND METHODS FOR CONSTRUCTION. THE CONTRACTOR SHALL ALSO SUBMIT INFORMATION INCLUDING DESIGN CALCULATIONS, CONSTRUCTION SCHEMATICS, AND CONSTRUCTION SEQUENCES AND PROCEDURES TO THE ENGINEER FOR REVIEW.

STATE OF CONNECTICUT - DEPARTMENT OF TRANSPORTATION		
STATE PROJECT NO. 92-532		
I-95 OVER NEW HAVEN HARBOR REPLACEMENT OF THE PEARL HARBOR MEMORIAL BRIDGE		
FIG. NO. AC-37S	STEEL ALT. - MAIN SPAN STAGE 1A-1B CONSTRUCTION SEQUENCE STEPS 8 & 9	2/06

FIGUREAC37S.DGN

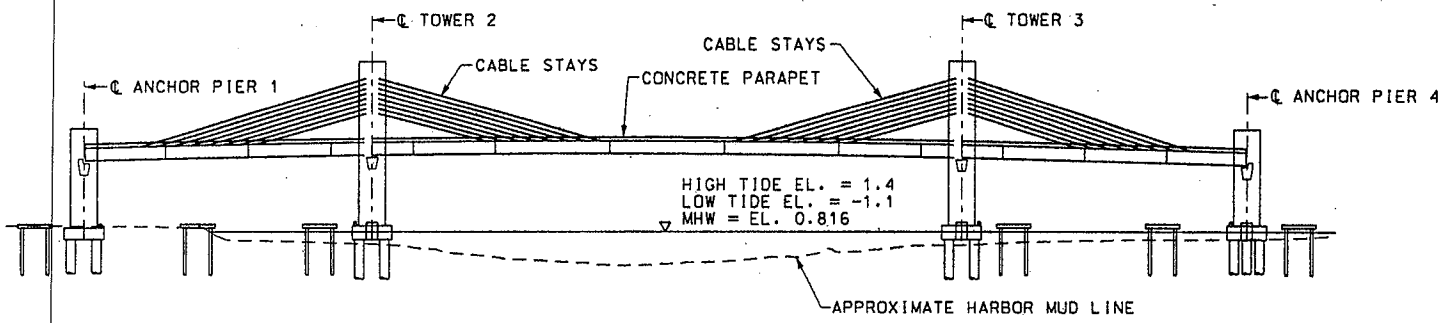

STEP 10 (ELEVATION)

STEP 10

1. CONSTRUCT PARAPET AND TEMPORARY MEDIAN BARRIER. INSTALL OVERLAY FOR TEMPORARY CONDITION AND CONCRETE MISCELLANEOUS WORK.
2. OPEN TO STAGED TRAFFIC.

STAGE 3 CONSTRUCTION

(DEMOLITION)

1. DEMOLISH EXISTING I-95 BRIDGE MAIN SPAN UNIT.

SCALE IN METERS

0 20 40 60 80 100

SCALE 1:2000

THE INFORMATION SHOWN ON THIS DRAWING, INCLUDING (AS APPLICABLE) SIZES OF MEMBERS, THE SEQUENCE OF CONSTRUCTION, AND ERECTION PROCEDURES CONVEYS THE ASSUMPTIONS MADE BY THE DESIGNER IN DESIGNING THE STRUCTURE, AND IS FOR INFORMATIONAL USE ONLY. THE CONTRACTOR SHALL BE RESPONSIBLE FOR SELECTING THE MEANS AND METHODS FOR CONSTRUCTION. THE CONTRACTOR SHALL ALSO SUBMIT INFORMATION INCLUDING DESIGN CALCULATIONS, CONSTRUCTION SCHEMATICS, AND CONSTRUCTION SEQUENCES AND PROCEDURES TO THE ENGINEER FOR REVIEW.

STATE OF CONNECTICUT - DEPARTMENT OF TRANSPORTATION		
STATE PROJECT NO. 92-532		
I-95 OVER NEW HAVEN HARBOR REPLACEMENT OF THE PEARL HARBOR MEMORIAL BRIDGE		
FIG. NO. AC-38S	STEEL ALT. - MAIN SPAN STAGE 1A-1B CONSTRUCTION SEQUENCE STEP 10	2/06

FIGUREAC38S.DGN

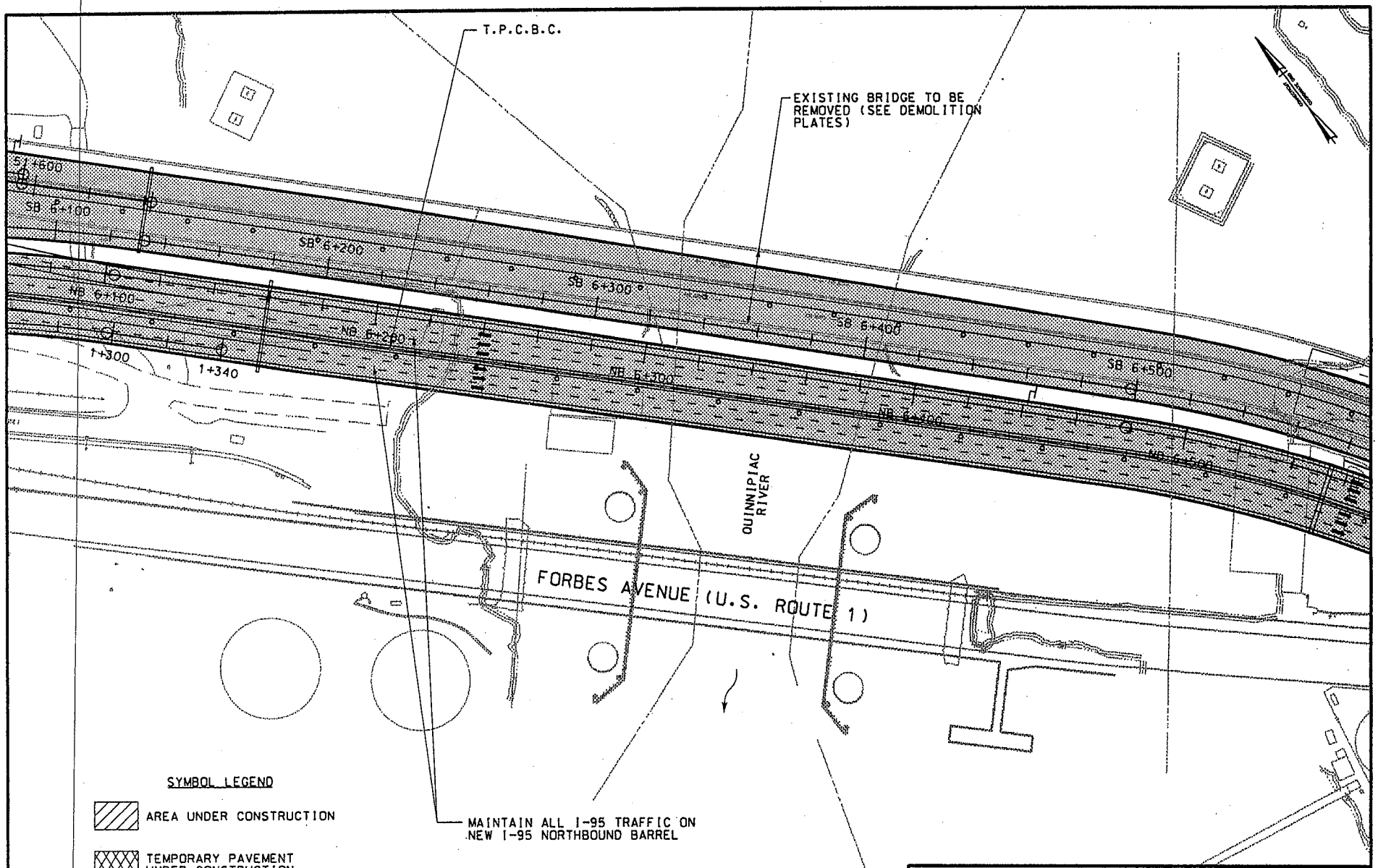

SYMBOL LEGEND

- AREA UNDER CONSTRUCTION
- TEMPORARY PAVEMENT UNDER CONSTRUCTION
- FINAL PAVEMENT COMPLETED
- TEMPORARY PAVEMENT COMPLETED

SCALE IN METERS

0 20 40 60 80 100

SCALE 1:2000

STATE OF CONNECTICUT - DEPARTMENT OF TRANSPORTATION		
STATE PROJECT NO. 92-532		
I-95 OVER NEW HAVEN HARBOR REPLACEMENT OF THE PEARL HARBOR MEMORIAL BRIDGE		
FIG. NO. AC-39S	STEEL ALTERNATE MAIN SPAN STAGE 2A TO 2B AND STAGE 3 CONSTRUCTION	2/06

FIGUREAC39S.DGN

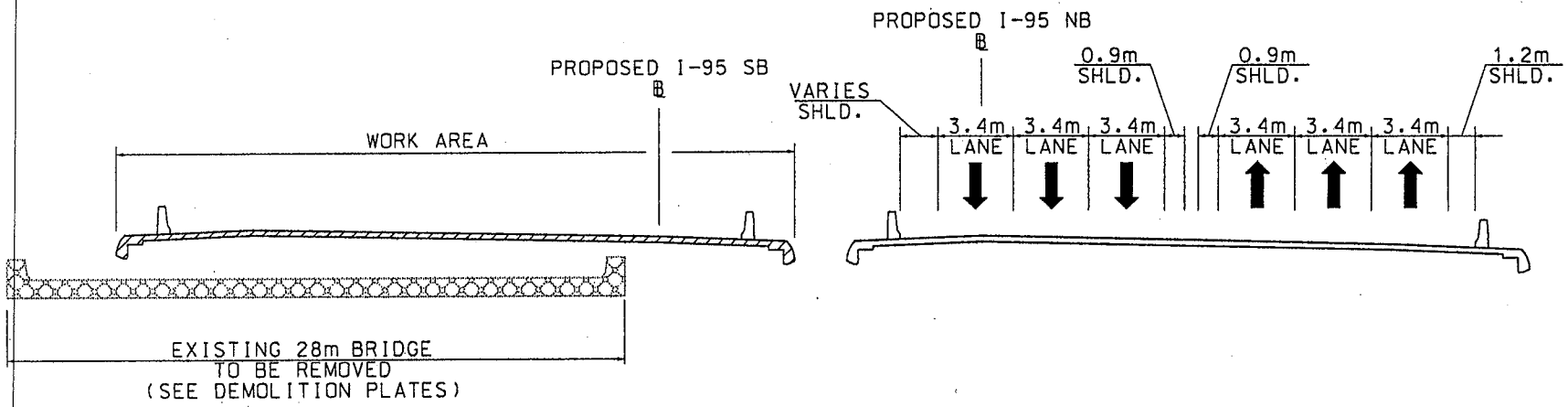

SYMBOL LEGEND

- AREA UNDER CONSTRUCTION
- TEMPORARY PAVEMENT UNDER CONSTRUCTION
- FINAL PAVEMENT COMPLETED
- TEMPORARY PAVEMENT COMPLETED

STATE OF CONNECTICUT - DEPARTMENT OF TRANSPORTATION		
STATE PROJECT NO. 92-532		
I-95 OVER NEW HAVEN HARBOR REPLACEMENT OF THE PEARL HARBOR MEMORIAL BRIDGE		
FIG. NO. AC-40S	STEEL ALT. - MAIN SPAN STAGE 2A TO 2B AND STAGE 3 TYPICAL SECTION	2/06

FIGUREAC40S.DGN

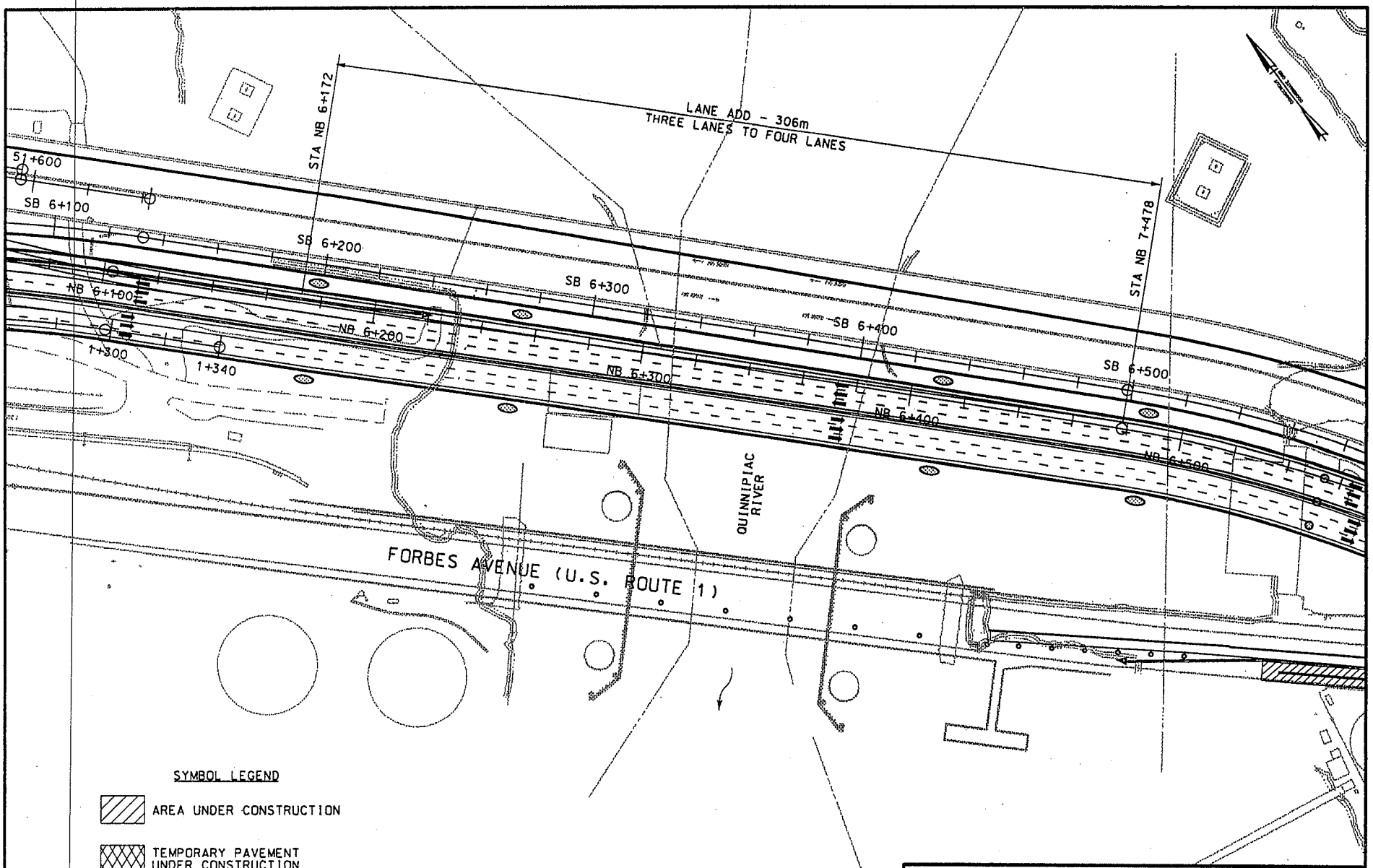

SYMBOL LEGEND

- AREA UNDER CONSTRUCTION
- TEMPORARY PAVEMENT UNDER CONSTRUCTION
- FINAL PAVEMENT COMPLETED
- TEMPORARY PAVEMENT COMPLETED

SCALE IN METERS

0 20 40 60 80 100

SCALE 1:2000

STATE OF CONNECTICUT - DEPARTMENT OF TRANSPORTATION		
STATE PROJECT NO. 92-532		
I-95 OVER NEW HAVEN HARBOR REPLACEMENT OF THE PEARL HARBOR MEMORIAL BRIDGE		
FIG. NO. AC-41S	STEEL ALTERNATE MAIN SPAN STAGE 3 TO 4B/5A CONSTRUCTION	2/06

FIGUREAC41S.DGN

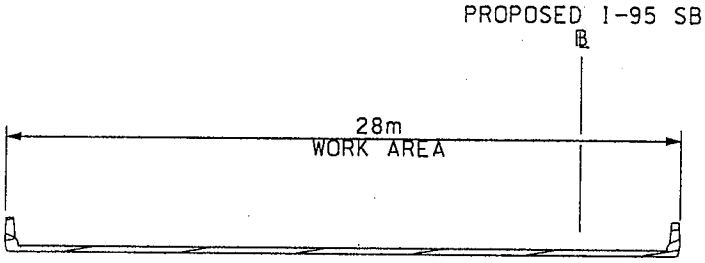

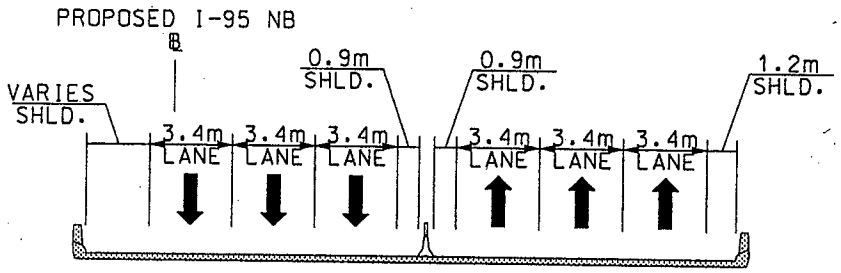

SYMBOL LEGEND

- AREA UNDER CONSTRUCTION
- TEMPORARY PAVEMENT UNDER CONSTRUCTION
- FINAL PAVEMENT COMPLETED
- TEMPORARY PAVEMENT COMPLETED

STATE OF CONNECTICUT - DEPARTMENT OF TRANSPORTATION		
STATE PROJECT NO. 92-532		
I-95 OVER NEW HAVEN HARBOR REPLACEMENT OF THE PEARL HARBOR MEMORIAL BRIDGE		
FIG. NO. AC-42S	STEEL ALT. - MAIN SPAN STAGE 3 TO 4B/5A TYPICAL SECTION	2/06

FIGUREAC42S.DGN

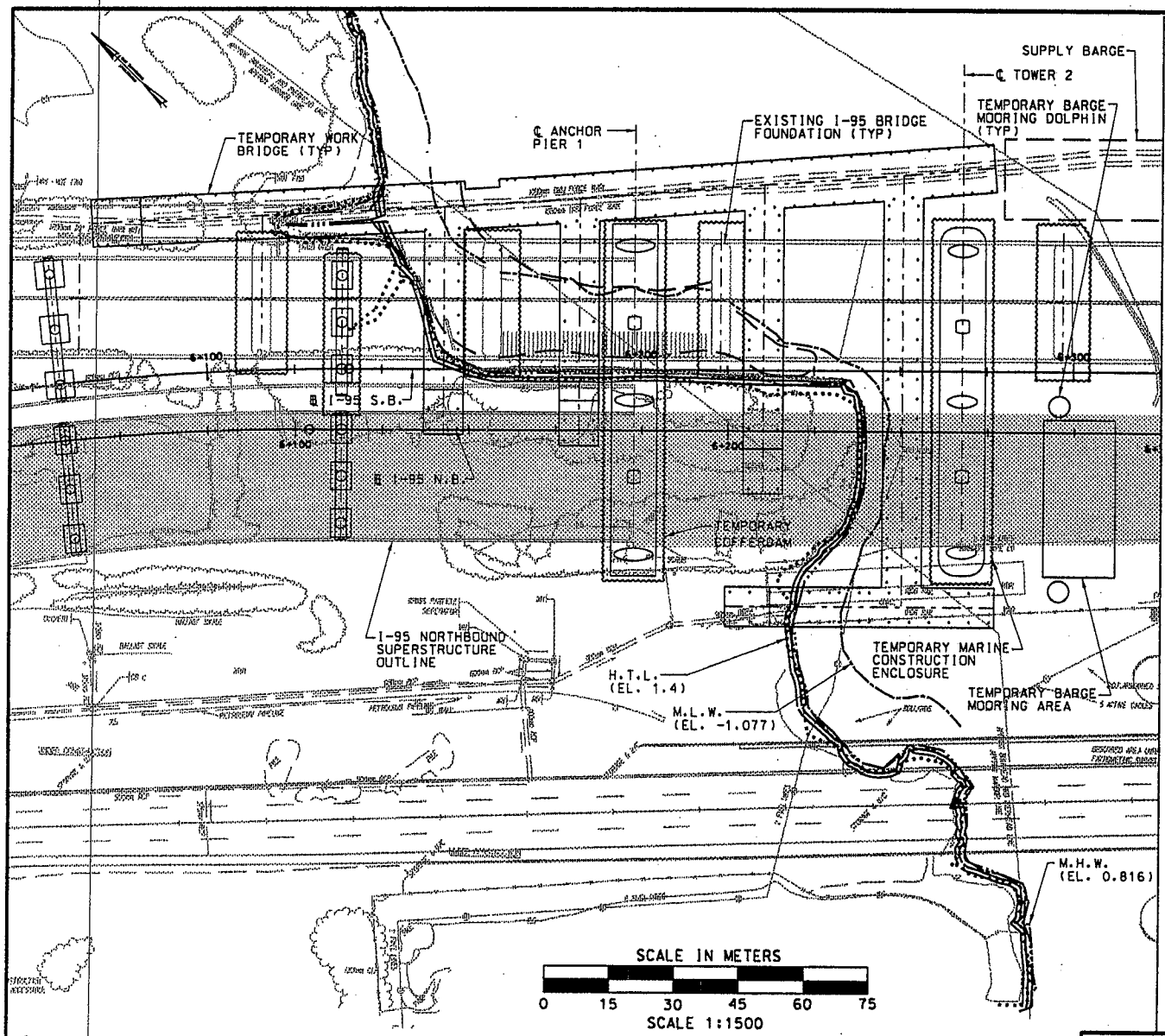

STAGES 3 TO 4B/5A CONSTRUCTION

(NEW CONSTRUCTION)

STEP 1

1. COMPLETE CONSTRUCTION OF ANCHOR PIERS 1 & 4 AND TOWERS 2 & 3.

THE INFORMATION SHOWN ON THIS DRAWING, INCLUDING (AS APPLICABLE) SIZES OF MEMBERS, THE SEQUENCE OF CONSTRUCTION, AND ERECTION PROCEDURES CONVEYS THE ASSUMPTIONS MADE BY THE DESIGNER IN DESIGNING THE STRUCTURE, AND IS FOR INFORMATIONAL USE ONLY. THE CONTRACTOR SHALL BE RESPONSIBLE FOR SELECTING THE MEANS AND METHODS FOR CONSTRUCTION. THE CONTRACTOR SHALL ALSO SUBMIT INFORMATION INCLUDING DESIGN CALCULATIONS, CONSTRUCTION SCHEMATICS, AND CONSTRUCTION SEQUENCES AND PROCEDURES TO THE ENGINEER FOR REVIEW.

NOTE: ENTIRE AREA WITHIN 100 YR. FLOODPLAIN.

FIGUREAC43S.DGN

STATE OF CONNECTICUT - DEPARTMENT OF TRANSPORTATION		
STATE PROJECT NO. 92-532		
I-95 OVER NEW HAVEN HARBOR REPLACEMENT OF THE PEARL HARBOR MEMORIAL BRIDGE		
FIG. NO. AC-43S	STEEL ALT. - MAIN SPAN STAGE 3 TO 4B/5A CONSTRUCTION SEQUENCE STEP 1	2/06

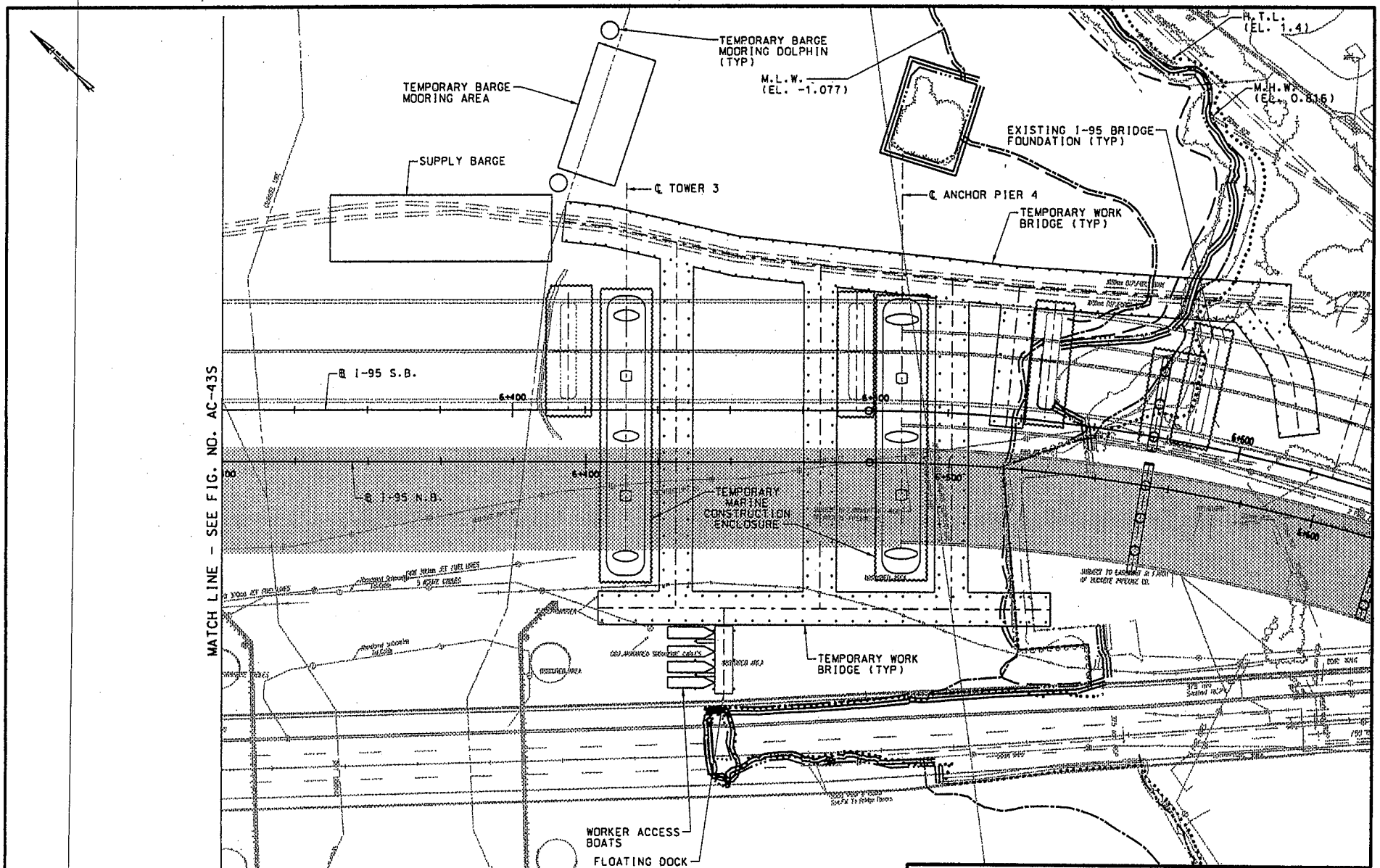

STATE OF CONNECTICUT - DEPARTMENT OF TRANSPORTATION

STATE PROJECT NO. 92-532

I-95 OVER NEW HAVEN HARBOR
REPLACEMENT OF THE
PEARL HARBOR MEMORIAL BRIDGE

FIG. NO.	STEEL ALT. - MAIN SPAN	
AC-44S	STAGE 3 TO 4B/5A CONSTRUCTION SEQUENCE STEP 1	2/06

FIGUREAC44S.DGN

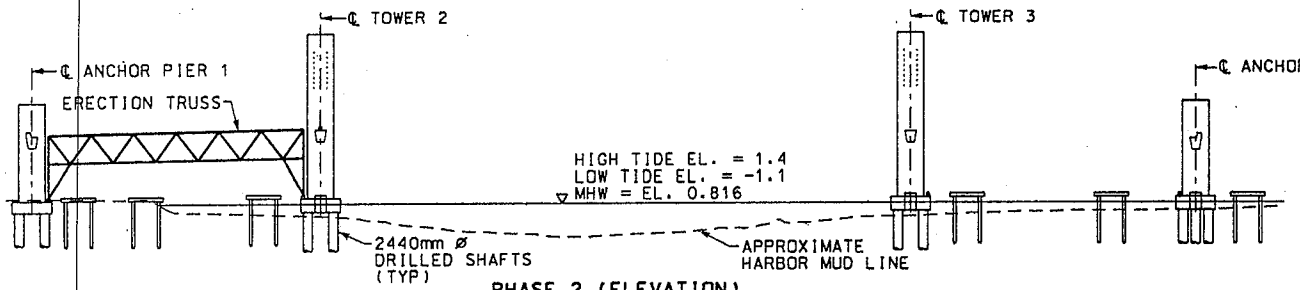

PHASE 2 (ELEVATION)

STEP 2

1. MOVE ERECTION TRUSS TO SOUTHBOUND BRIDGE LOCATION OF SPAN 1 TO SUPPORT BOX GIRDER FIELD SECTIONS AS THEY ARE ERECTED.
2. INSTALL ROLLER SUPPORTS AT TOWER 2 STRUT TO ALLOW BOX GIRDER FIELD SECTIONS TO CANTILEVER INTO SPAN 2.

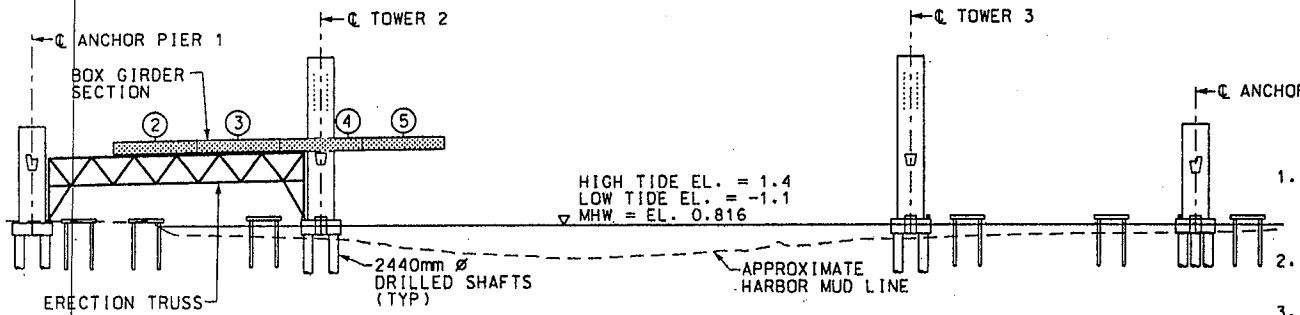

PHASE 3 (ELEVATION)

STEP 3

1. THE ERECTION TRUSS SHALL INCORPORATE ROLLERS WHICH WILL ALLOW THE BOX GIRDERS TO BE ASSEMBLED TOGETHER AND ROLLED TO THE FINAL POSITION.
2. BOX GIRDERS ARE SHOP PRE-ASSEMBLED TO ASSURE PROPER FIT FOR ASSEMBLY ON ERECTION TRUSS.
3. INSTALL GIRDER FIELD SECTIONS 2, 3, 4 AND 5 FOR GIRDER 1 ON TOP OF ERECTION TRUSS. BOX GIRDERS SHALL HAVE THE TRANSVERSE TOP FLANGE BRACING IN PLACE TO PREVENT DISTORTION AND OVERSTRESS DURING ERECTION. ROLL FIELD SECTIONS INTO POSITION.

FOR SPANS 1 & 3 ERECTION DETAILS, SEE DRAWING "SPAN 1 & 3 ERECTION PROCEDURES".

◯ DENOTES FIELD SECTION.

SCALE IN METERS

0 20 40 60 80 100

SCALE 1:2000

THE INFORMATION SHOWN ON THIS DRAWING, INCLUDING (AS APPLICABLE) SIZES OF MEMBERS, THE SEQUENCE OF CONSTRUCTION, AND ERECTION PROCEDURES CONVEYS THE ASSUMPTIONS MADE BY THE DESIGNER IN DESIGNING THE STRUCTURE, AND IS FOR INFORMATIONAL USE ONLY. THE CONTRACTOR SHALL BE RESPONSIBLE FOR SELECTING THE MEANS AND METHODS FOR CONSTRUCTION. THE CONTRACTOR SHALL ALSO SUBMIT INFORMATION INCLUDING DESIGN CALCULATIONS, CONSTRUCTION SCHEMATICS, AND CONSTRUCTION SEQUENCES AND PROCEDURES TO THE ENGINEER FOR REVIEW.

STATE OF CONNECTICUT - DEPARTMENT OF TRANSPORTATION		
STATE PROJECT NO. 92-532		
I-95 OVER NEW HAVEN HARBOR REPLACEMENT OF THE PEARL HARBOR MEMORIAL BRIDGE		
FIG. NO. AC-45S	STEEL ALT. - MAIN SPAN STAGE 3 TO 4B/5A CONSTRUCTION SEQUENCE STEPS 2 & 3	2/06

FIGUREAC45S.DGN

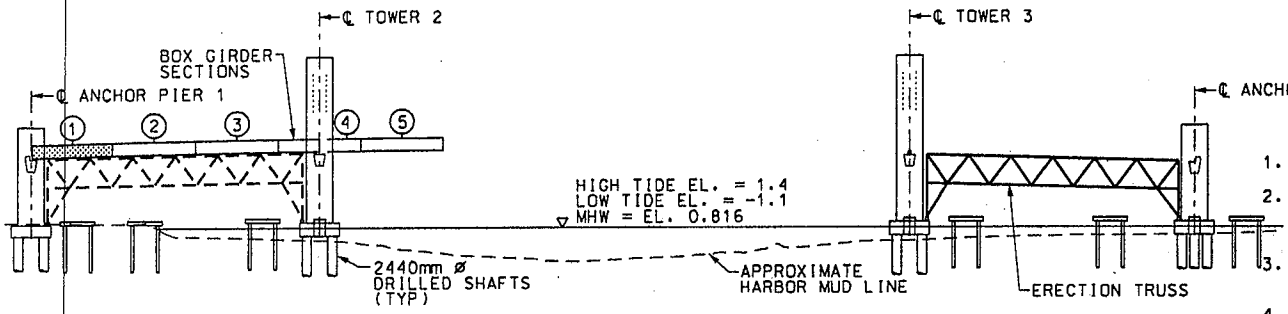

PHASE 4 (ELEVATION)

STEP 4

1. INSTALL FIELD SECTION 1.
2. AFTER FIELD SECTIONS 1 & 2 ARE FITTED AND BOLTED TOGETHER, THE ERECTION SEQUENCE IS REPEATED TO OTHER GIRDER LINES.
3. TRANSVERSE FRAMES SHALL BE FITTED AND INSTALLED AS GIRDERS REACH THEIR FINAL POSITION.
4. EDGE BOXES ARE ERECTED IN SPAN 1 USING ERECTION TRUSS WORKING PLATFORMS.
5. AFTER SPAN 1 GIRDERS ARE IN PLACE, THE ERECTION TRUSS IS MOVED TO SPAN 3.
6. INSTALL ROLLER SUPPORTS AT TOWER 3 STRUT TO ALLOW BOX GIRDERS TO CANTILEVER INTO SPAN 2.
7. CAST BALLAST CONCRETE IN BOX GIRDERS AT ANCHOR PIER 1.

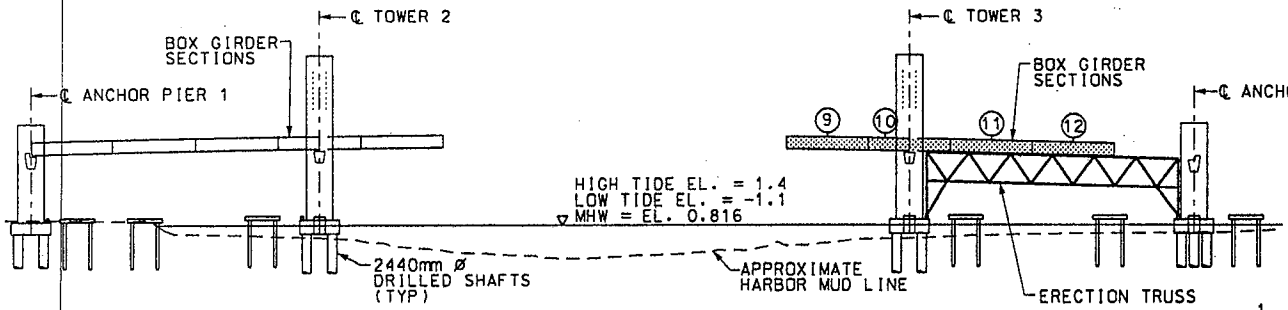

PHASE 5 (ELEVATION)

STEP 5

1. INSTALL FIELD SECTIONS 9, 10, 11 AND 12 ON TOP OF ERECTION TRUSS. BOX GIRDERS SHALL HAVE THE TRANSVERSE TOP FLANGE BRACING IN PLACE TO PREVENT DISTORTION AND OVERSTRESS DURING ERECTION. ROLL FIELD SECTIONS INTO THEIR FINAL POSITION.

FOR SPANS 1 & 3 ERECTION DETAILS, SEE DRAWING "SPAN 1 & 3 ERECTION PROCEDURES".

◯ DENOTES FIELD SECTION.

SCALE IN METERS

0 20 40 60 80 100

SCALE 1:2000

THE INFORMATION SHOWN ON THIS DRAWING, INCLUDING (AS APPLICABLE) SIZES OF MEMBERS, THE SEQUENCE OF CONSTRUCTION, AND ERECTION PROCEDURES CONVEYS THE ASSUMPTIONS MADE BY THE DESIGNER IN DESIGNING THE STRUCTURE, AND IS FOR INFORMATIONAL USE ONLY. THE CONTRACTOR SHALL BE RESPONSIBLE FOR SELECTING THE MEANS AND METHODS FOR CONSTRUCTION. THE CONTRACTOR SHALL ALSO SUBMIT INFORMATION INCLUDING DESIGN CALCULATIONS, CONSTRUCTION SCHEMATICS, AND CONSTRUCTION SEQUENCES AND PROCEDURES TO THE ENGINEER FOR REVIEW.

STATE OF CONNECTICUT - DEPARTMENT OF TRANSPORTATION		
STATE PROJECT NO. 92-532		
I-95 OVER NEW HAVEN HARBOR REPLACEMENT OF THE PEARL HARBOR MEMORIAL BRIDGE		
FIG. NO. AC-46S	STEEL ALT. - MAIN SPAN STAGE 3 TO 4B/5A CONSTRUCTION SEQUENCE STEPS 4 & 5	2/06

FIGUREAC46S.DGN

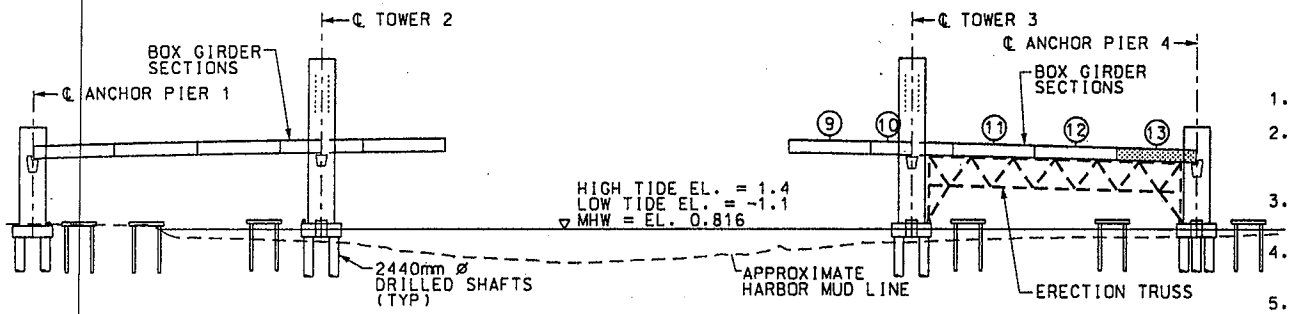

PHASE 6 (ELEVATION)

STEP 6

1. INSTALL FIELD SECTION 13.
2. AFTER FIELD SECTIONS 12 & 13 ARE FITTED AND BOLTED TOGETHER, THE ERECTION SEQUENCE IS REPEATED TO OTHER GIRDER LINES.
3. TRANSVERSE FRAMES SHALL BE FITTED AND INSTALLED AS GIRDERS REACH THEIR FINAL POSITON.
4. EDGE GIRDERS ARE ERECTED IN SPAN 3 USING ERECTION TRUSS WORKING PLATFORMS.
5. AFTER SPAN 3 GIRDERS ARE IN PLACE, THE ERECTION TRUSS IS DISASSEMBLED.
6. CAST BALLAST CONCRETE IN BOX GIRDERS AT ANCHOR PIER 4.

FOR SPANS 1 & 3 ERECTION DETAILS, SEE DRAWINGS "SPAN 1 & 3 ERECTION PROCEDURES".

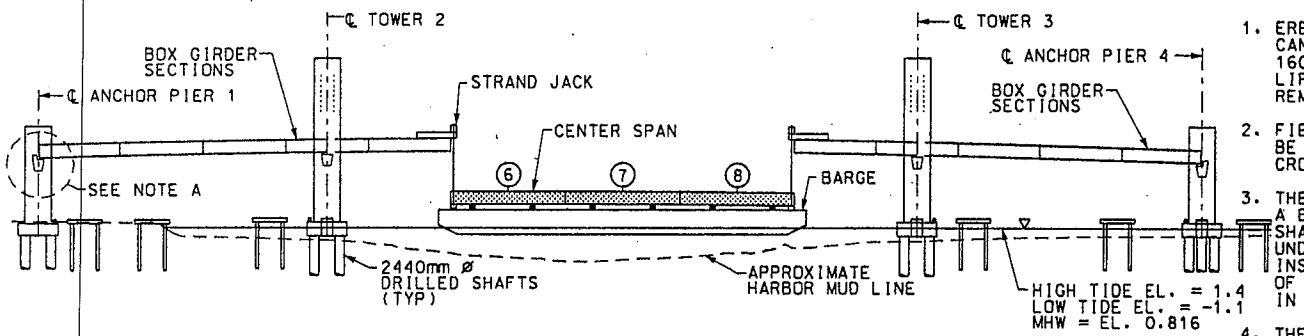

PHASE 7 (ELEVATION)

STEP 7

1. ERECTION FRAMES SHALL BE CONSTRUCTED ON THE CANTILEVER ENDS OF THE BOX GIRDERS. SIX 1600 kN STRAND JACKS MOUNTED OVER THE ENDS SHALL LIFT SPAN 2 OFF A BARGE INTO POSITION IN THE REMAINING GAP IN THE BRIDGE.
2. FIELD SECTIONS 6, 7 & 8 OF THE 3 MAIN GIRDERS SHALL BE PRE-ASSEMBLED AS A SINGLE UNIT COMPLETE WITH CROSS FRAMES.
3. THE SPAN 2 ASSEMBLY SHALL BE FLOATED INTO PLACE ON A BARGE UNDER THE GAP IN THE BRIDGE. THE GIRDERS SHALL BE POSITIONED AND SHALL BE ACCURATELY MOORED UNDER SPAN 2 POSITION. NEXT, STRANDS SHALL BE INSTALLED DOWN FROM THE STRAND JACKS TO THE ENDS OF SPAN 2 BOX GIRDER ASSEMBLY AND SHALL BE INSTALLED IN STRAND GRIP ASSEMBLIES.
4. THE SPAN 2 ASSEMBLY SHALL BE LIFTED TO ITS FINAL POSITION, FILLING THE REMAINING GAP IN THE BOX GIRDERS. THE WEB SPLICES SHALL THEN BE MADE UP, BE FITTED, REAMED AND BOLTED IN PLACE.

NOTE A:
LONGITUDINAL JACKING AT ANCHOR PIER 1 OF FIELD SECTIONS 1 THRU 5 MAY BE NECESSARY FOR INSTALLATION OF SPAN 2 ASSEMBLY.

SCALE IN METERS
0 20 40 60 80 100
SCALE 1:2000

◯ DENOTES FIELD SECTION.

THE INFORMATION SHOWN ON THIS DRAWING, INCLUDING (AS APPLICABLE) SIZES OF MEMBERS, THE SEQUENCE OF CONSTRUCTION, AND ERECTION PROCEDURES CONVEYS THE ASSUMPTIONS MADE BY THE DESIGNER IN DESIGNING THE STRUCTURE, AND IS FOR INFORMATIONAL USE ONLY. THE CONTRACTOR SHALL BE RESPONSIBLE FOR SELECTING THE MEANS AND METHODS FOR CONSTRUCTION. THE CONTRACTOR SHALL ALSO SUBMIT INFORMATION INCLUDING DESIGN CALCULATIONS, CONSTRUCTION SCHEMATICS, AND CONSTRUCTION SEQUENCES AND PROCEDURES TO THE ENGINEER FOR REVIEW.

STATE OF CONNECTICUT - DEPARTMENT OF TRANSPORTATION		
STATE PROJECT NO. 92-532		
I-95 OVER NEW HAVEN HARBOR REPLACEMENT OF THE PEARL HARBOR MEMORIAL BRIDGE		
FIG. NO. AC-47S	STEEL ALT. - MAIN SPAN STAGE 3 TO 4B/5A CONSTRUCTION SEQUENCE STEPS 6 & 7	2/06

FIGUREAC47S.DGN

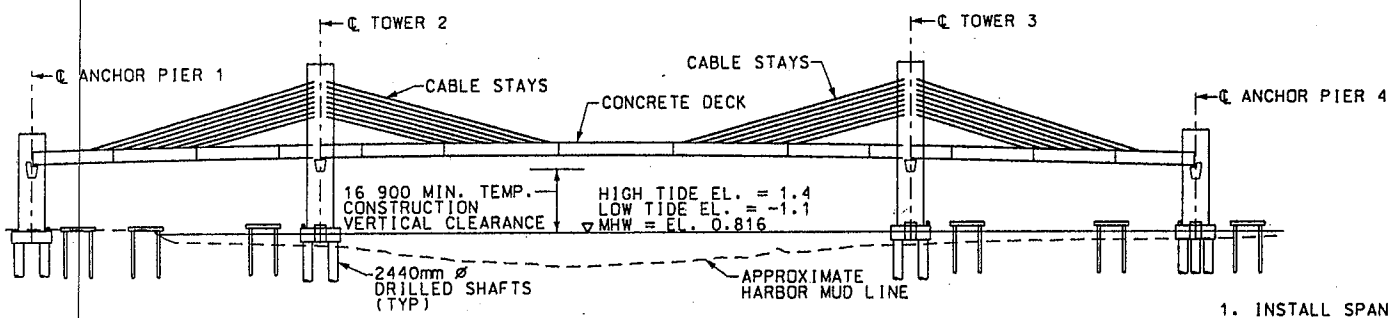

PHASE 8 (ELEVATION)

STEP 8

1. INSTALL SPAN 2 EDGE BOXES.
2. THE PERMANENT CABLE STAYS SHALL BE INSTALLED AND STRESSED TO THEIR FINAL TENSION, IN BALANCED FASHION FROM THE TOWER TO THE STAY CABLE GIRDERS.
3. FOLLOWING CABLE STRESSING, THE CONCRETE DECK SHALL BE INSTALLED IN BALANCED MANNER.

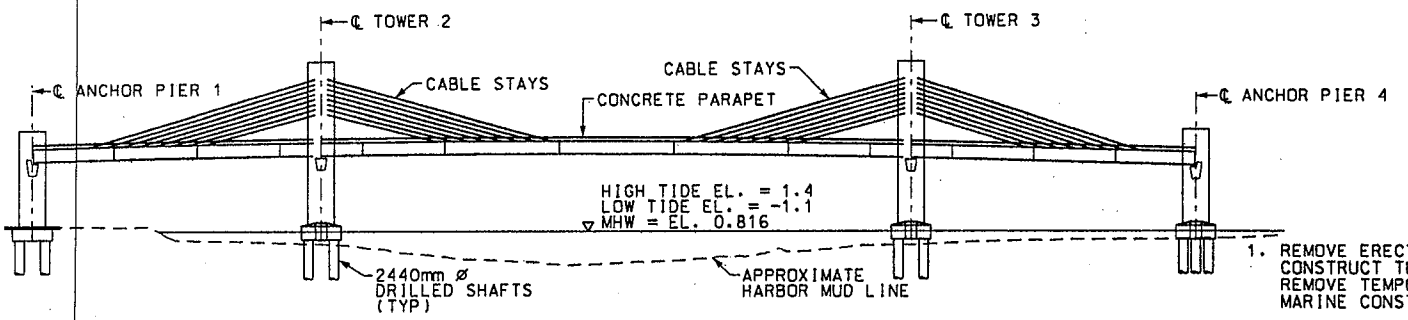

PHASE 9 (ELEVATION)

STEP 9

1. REMOVE ERECTION TRUSS SUPPORT BLOCKS AND RAILS, CONSTRUCT TOP PORTION OF FOUNDATION CAPS, AND REMOVE TEMPORARY WORK BRIDGES, COFFERDAMS AND MARINE CONSTRUCTION ENCLOSURES.
2. CONSTRUCT PARAPET, WEARING SURFACE AND COMPLETE FINISHING WORK, FOR SOUTHBOUND BRIDGE.
3. OPEN SOUTHBOUND BRIDGE TO TRAFFIC.
4. REMOVE TEMPORARY OVERLAY AND PRECAST BARRIER ON NORTHBOUND BRIDGE. CONSTRUCT FINAL OVERLAY (STAGED WITH TRAFFIC).

NOTE:
THE CONTRACTOR SHALL MAINTAIN STABILITY OF THE BOXES DURING ALL LIFTING OR ROLLING OPERATIONS.

SCALE IN METERS

0 20 40 60 80 100

SCALE 1:2000

THE INFORMATION SHOWN ON THIS DRAWING, INCLUDING (AS APPLICABLE) SIZES OF MEMBERS, THE SEQUENCE OF CONSTRUCTION, AND ERECTION PROCEDURES CONVEYS THE ASSUMPTIONS MADE BY THE DESIGNER IN DESIGNING THE STRUCTURE, AND IS FOR INFORMATIONAL USE ONLY. THE CONTRACTOR SHALL BE RESPONSIBLE FOR SELECTING THE MEANS AND METHODS FOR CONSTRUCTION. THE CONTRACTOR SHALL ALSO SUBMIT INFORMATION INCLUDING DESIGN CALCULATIONS, CONSTRUCTION SCHEMATICS, AND CONSTRUCTION SEQUENCES AND PROCEDURES TO THE ENGINEER FOR REVIEW.

STATE OF CONNECTICUT - DEPARTMENT OF TRANSPORTATION		
STATE PROJECT NO. 92-532		
I-95 OVER NEW HAVEN HARBOR REPLACEMENT OF THE PEARL HARBOR MEMORIAL BRIDGE		
FIG. NO. AC-48S	STEEL ALT. - MAIN SPAN STAGE 3 TO 4B/5A CONSTRUCTION SEQUENCE STEPS 8 & 9	2/06

FIGUREAC48S.DGN

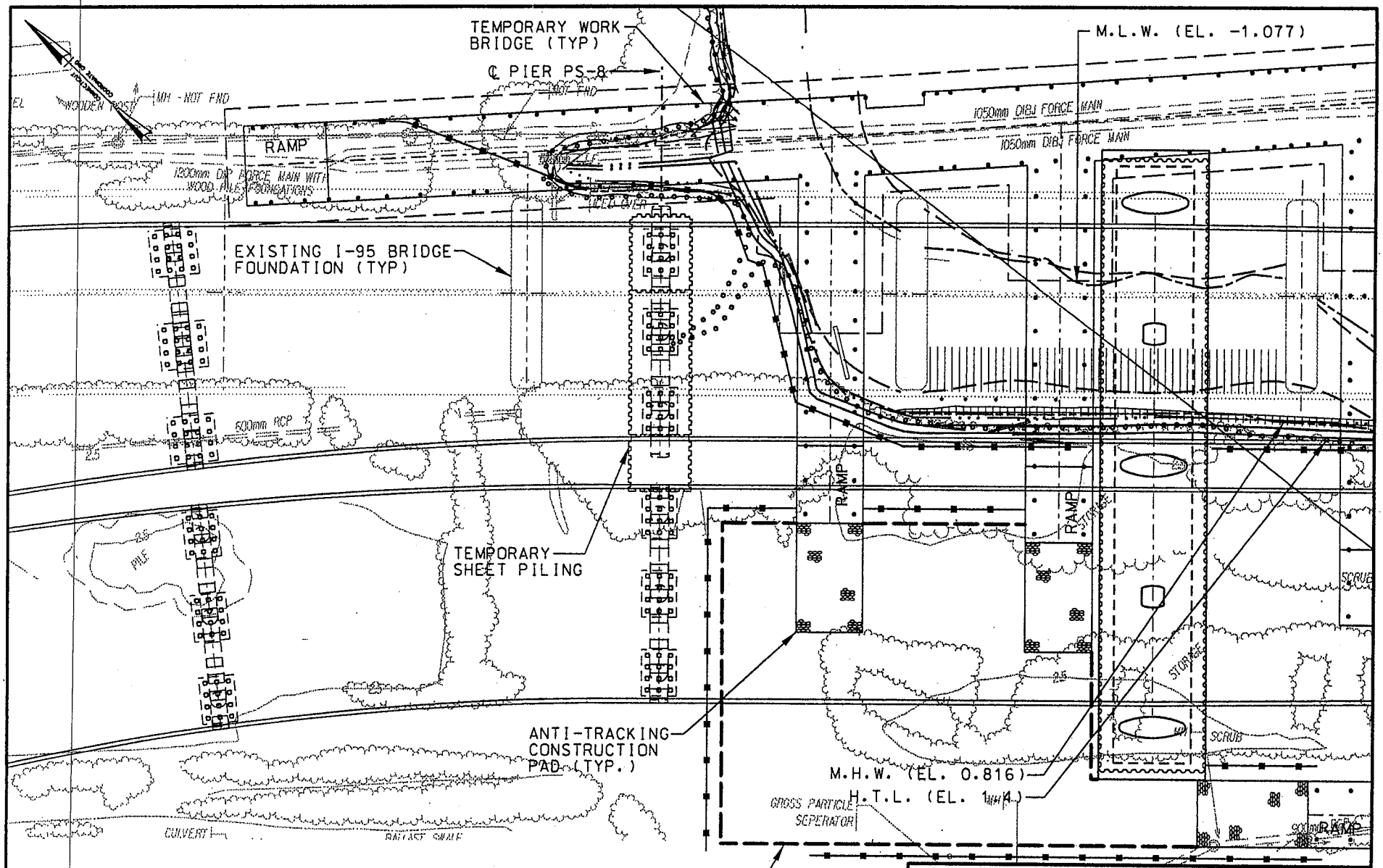

STATE OF CONNECTICUT - DEPARTMENT OF TRANSPORTATION

STATE PROJECT NO. 92-532

I-95 OVER NEW HAVEN HARBOR
REPLACEMENT OF THE
PEARL HARBOR MEMORIAL BRIDGE

FIG. NO.	WEST APPROACH CONSTRUCTION STAGING AREA	2/06
AC-49		

FIGUREAC49.DGN

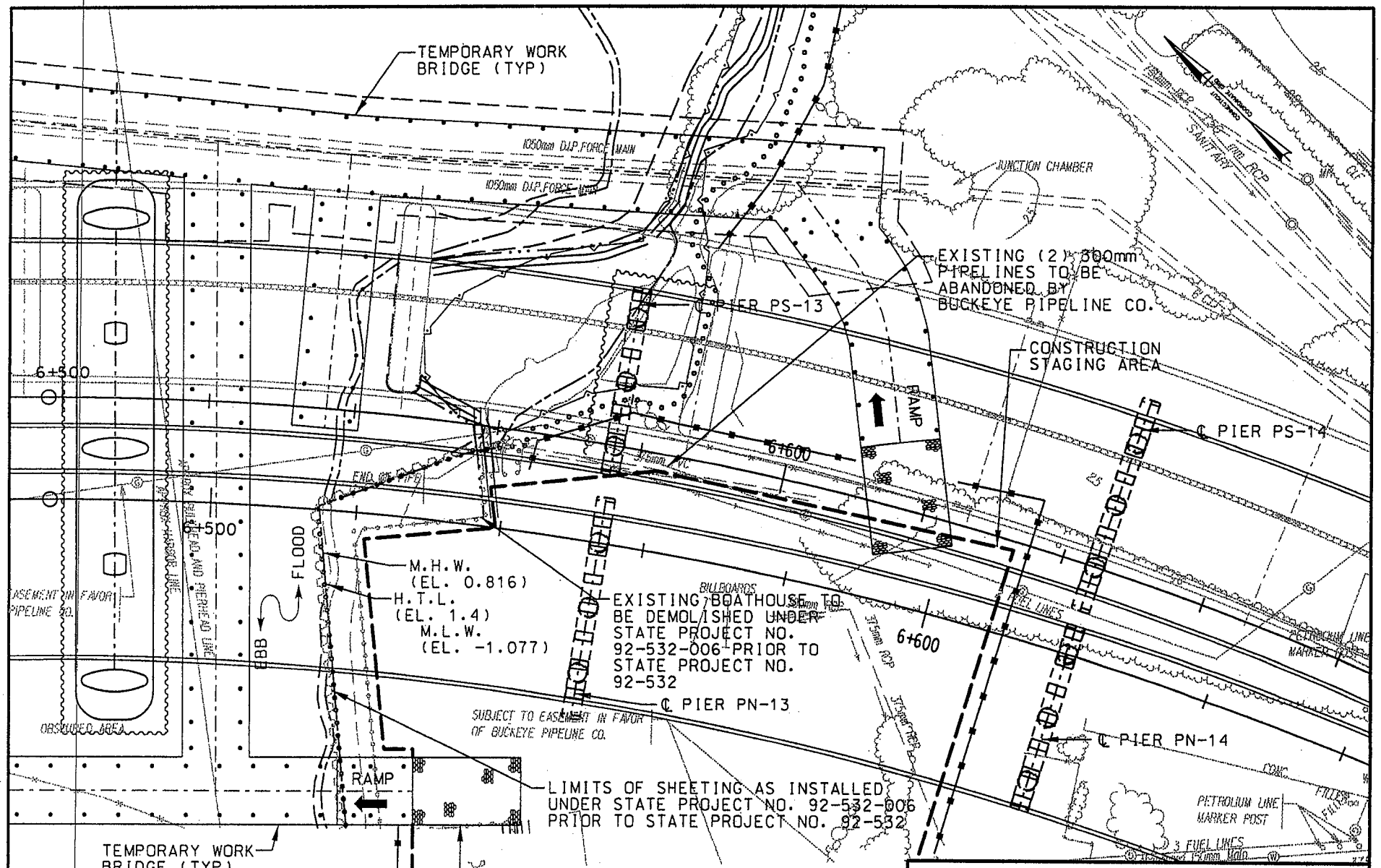

NOTE:
HTL, MHW, MLW AND INTERTIDAL FLATS ADJACENT TO THE SHEETING LIMITS ARE PREDICTED LOCATIONS SUBSEQUENT TO SHEETING INSTALLED UNDER STATE PROJECT NO. 92-532-006 PRIOR TO STATE PROJECT NO. 92-532.

STATE OF CONNECTICUT - DEPARTMENT OF TRANSPORTATION		
STATE PROJECT NO. 92-532		
I-95 OVER NEW HAVEN HARBOR REPLACEMENT OF THE PEARL HARBOR MEMORIAL BRIDGE		
FIG. NO. AC-50	EAST APPROACH CONSTRUCTION STAGING AREA	2/06

FIGUREAC50.DGN

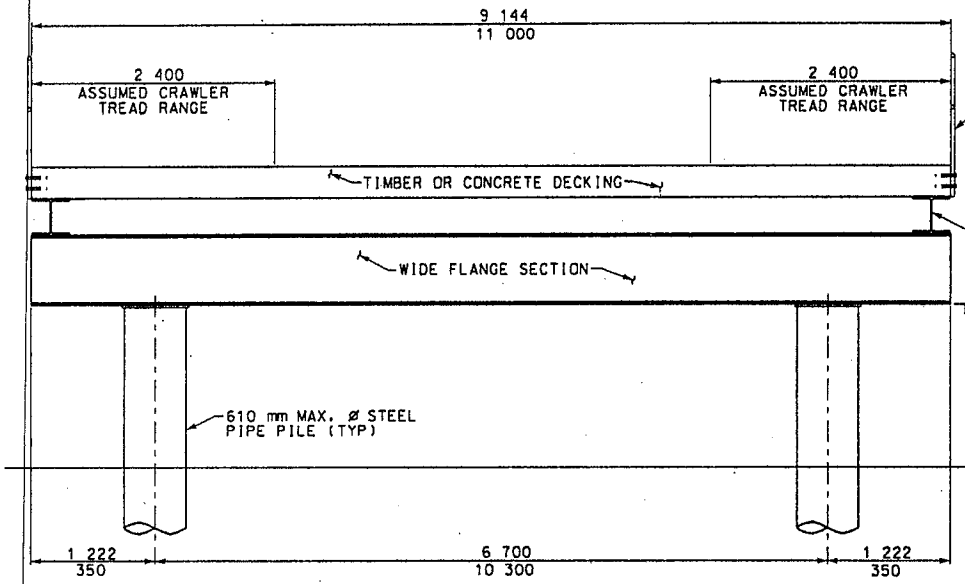

SECTION THRU TRESTLE

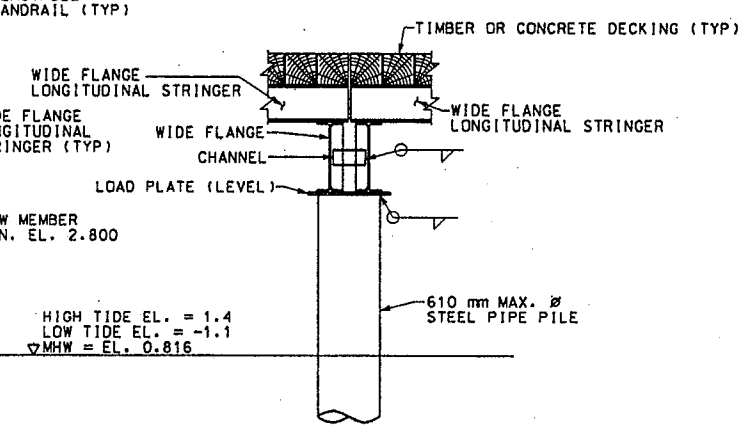

SECTION @ TRESTLE CONNECTIONS

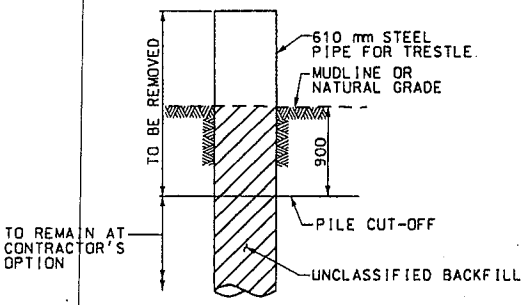

PILE CUT-OFF DETAIL

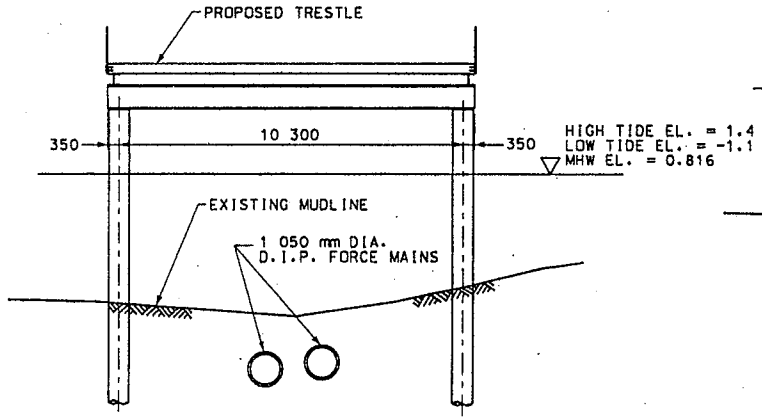

SECTION THRU FORCE MAINS WITH PROPOSED TEMPORARY TRESTLE PROTECTION

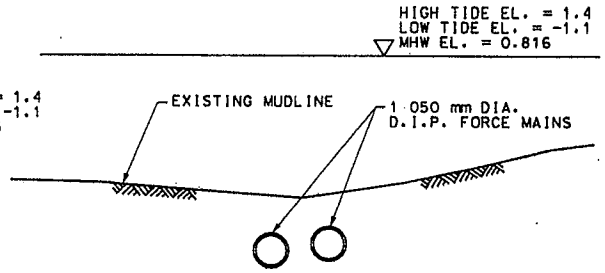

EXISTING SECTION THRU FORCE MAINS

NOTE:
TRESTLE DETAILS SHOWN FOR INFORMATION ONLY.
TRESTLE DESIGN AND PLACEMENT TO BE APPROVED BY OTHER AGENCIES.

STATE OF CONNECTICUT - DEPARTMENT OF TRANSPORTATION		
STATE PROJECT NO. 92-532		
I-95 OVER NEW HAVEN HARBOR REPLACEMENT OF THE PEARL HARBOR MEMORIAL BRIDGE		
FIG. NO. AC-51	TRESTLE LAYOUT AND DETAILS	2/06

FIGUREAC51.DGN

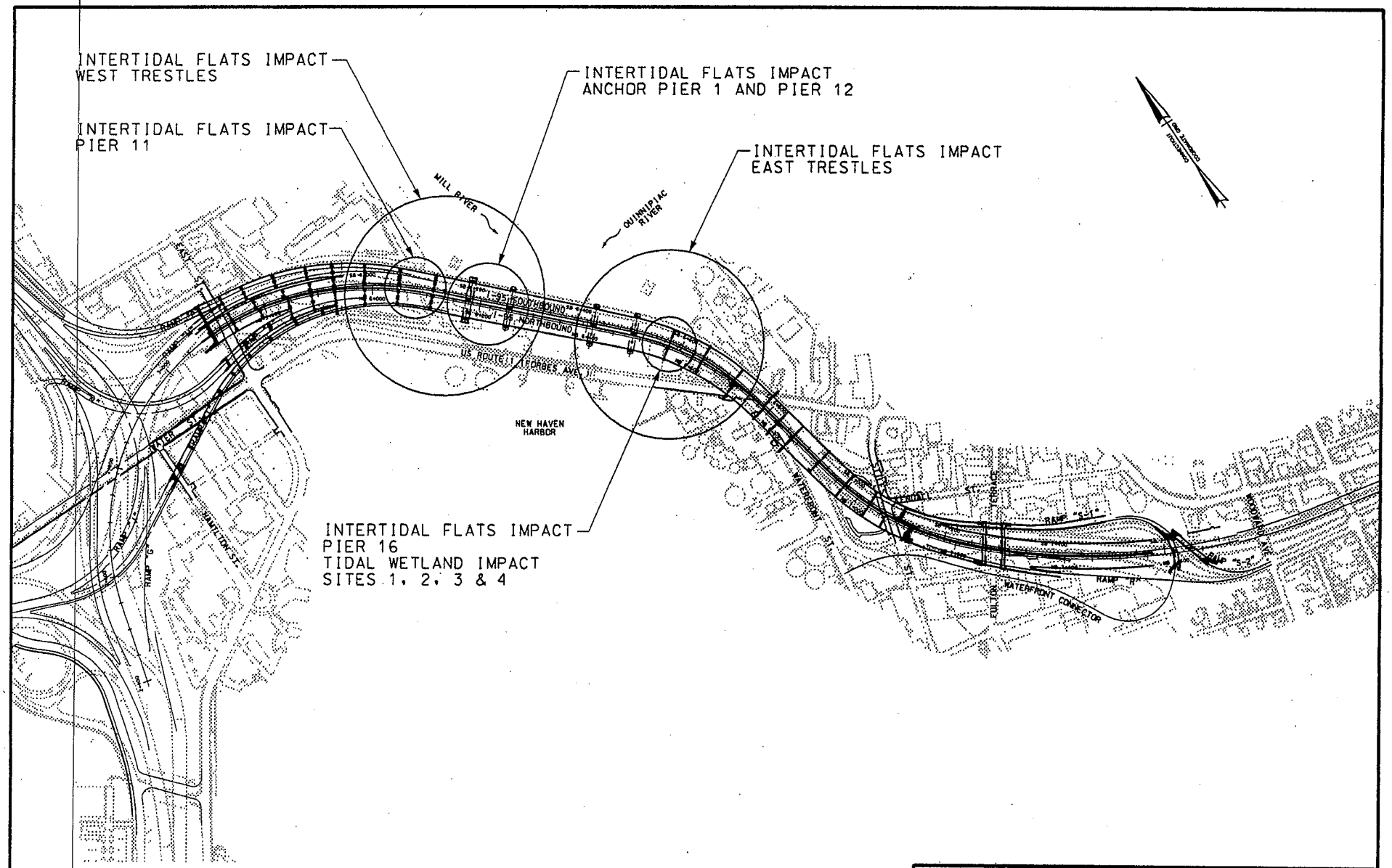

STATE OF CONNECTICUT - DEPARTMENT OF TRANSPORTATION		
STATE PROJECT NO. 92-532		
I-95 OVER NEW HAVEN HARBOR REPLACEMENT OF THE PEARL HARBOR MEMORIAL BRIDGE		
FIG. NO. AC-52	TIDAL WETLAND AND INTERTIDAL FLATS IMPACT AREAS SITE PLAN	2/06

FIGUREAC52.DGN

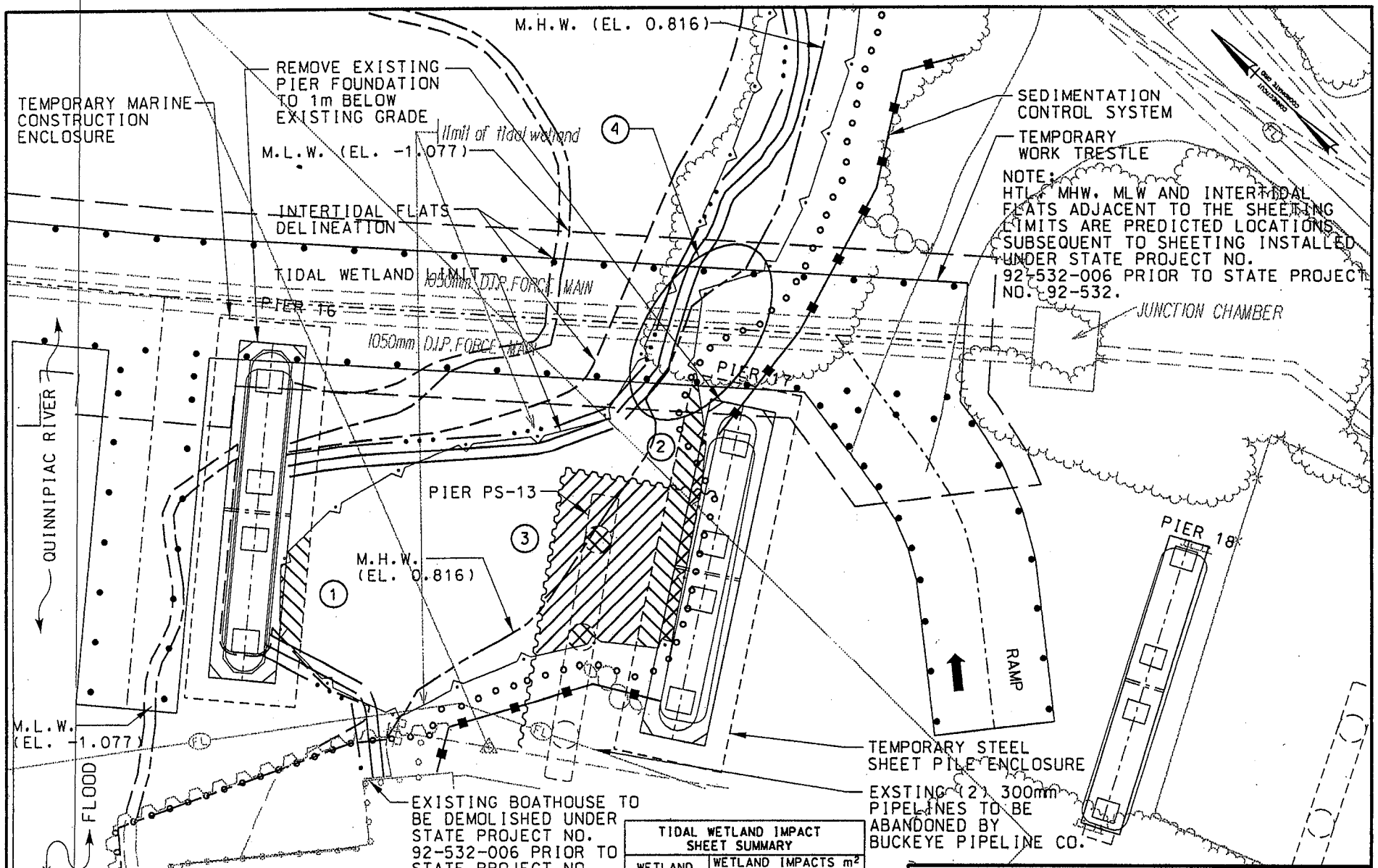

TIDAL WETLAND IMPACT SHEET SUMMARY		
WETLAND AREA	WETLAND IMPACTS m^2	
	TEMPORARY	PERMANENT
1	23	3
2	49	23
3	193	9
4	1	0
TOTAL	266	35

STATE OF CONNECTICUT - DEPARTMENT OF TRANSPORTATION

STATE PROJECT NO. 92-532

I-95 OVER NEW HAVEN HARBOR
REPLACEMENT OF THE
PEARL HARBOR MEMORIAL BRIDGE

FIG. NO. AC-53	TIDAL WETLAND IMPACT SITE 1 & 2 DEMOLITION SITE 3 PIER PS-13	2/06

FIGUREAC53.DGN

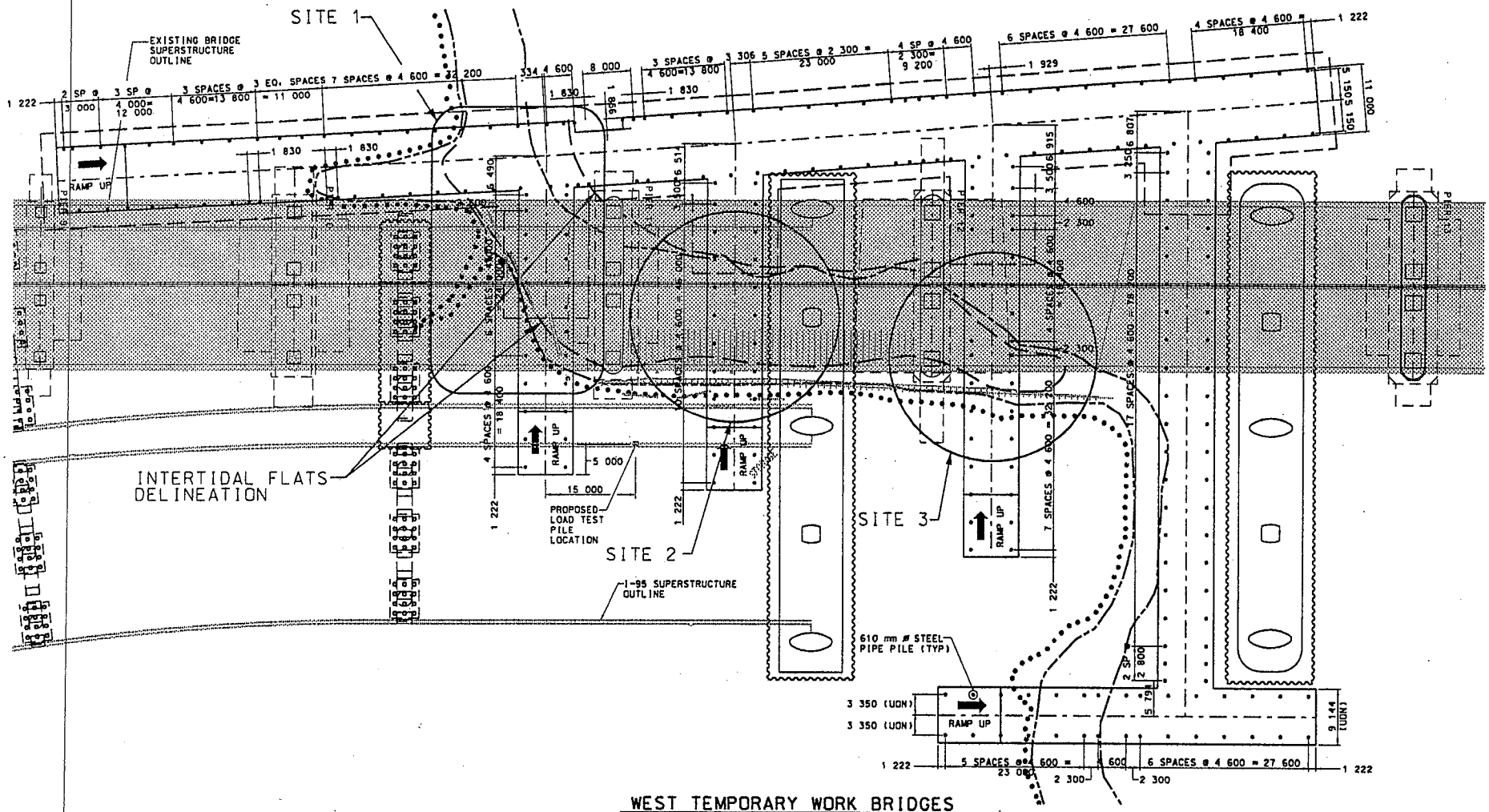

WEST TEMPORARY WORK BRIDGES

SCALE IN METERS

0 10 20 30 40 50

SCALE 1:1000

INTERTIDAL FLAT IMPACT SHEET SUMMARY				
SITE	NUMBER OF PILES	IMPACT m²		
		TEMPORARY	PERMANENT	RESTORED
1	30	8.8	0	0
2	7	2.0	0	0
3	7	2.0	0	0
TOTAL	44	13	0	0

STATE OF CONNECTICUT - DEPARTMENT OF TRANSPORTATION

STATE PROJECT NO. 92-532

I-95 OVER NEW HAVEN HARBOR
REPLACEMENT OF THE
PEARL HARBOR MEMORIAL BRIDGE

FIG. NO.	INTERTIDAL FLATS IMPACT WEST APPROACH	2/06
AC-54		

FIGUREAC54.DGN

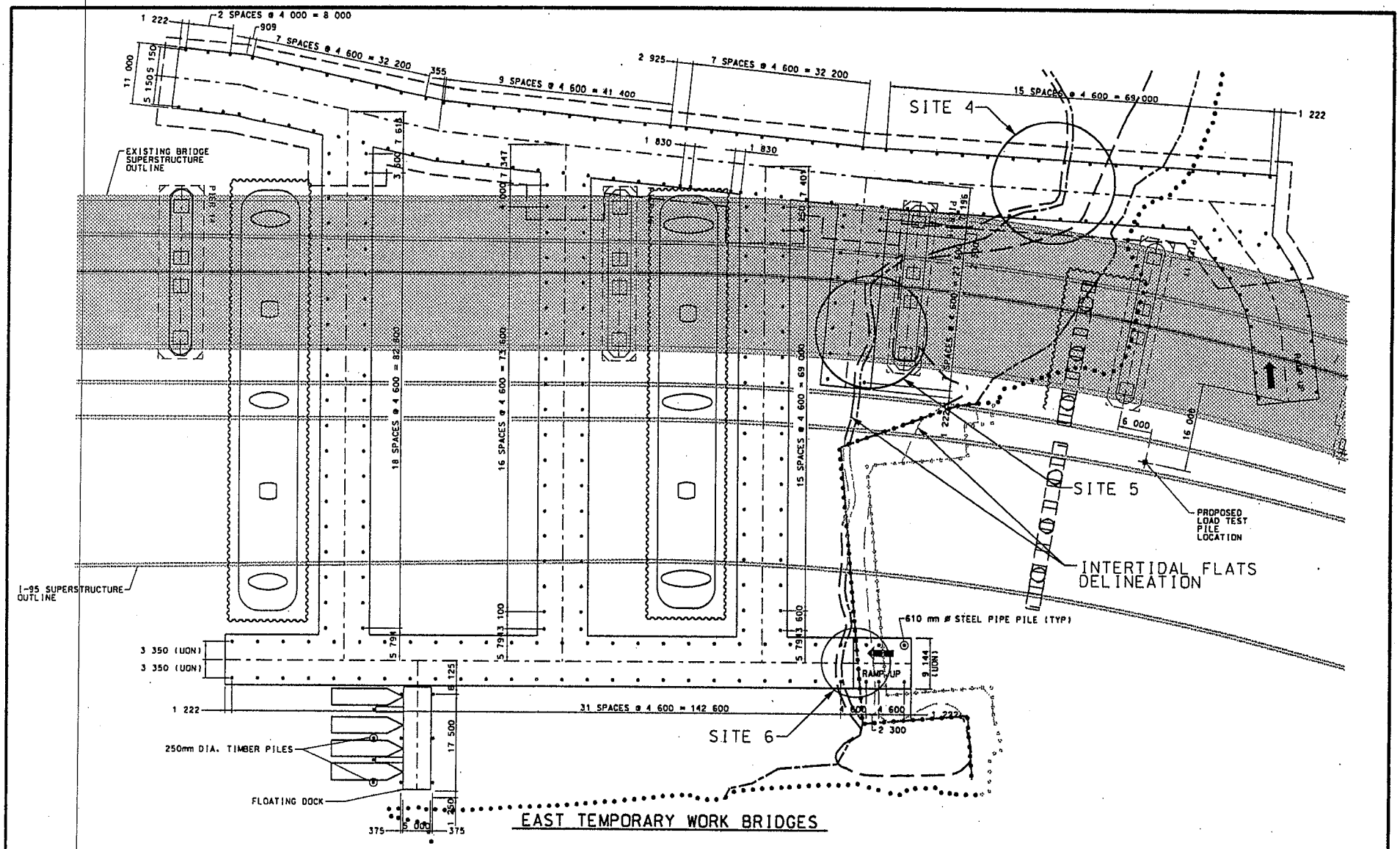

INTERTIDAL FLAT IMPACT SHEET SUMMARY				
SITE	NUMBER OF PILES	IMPACT m^2		
		TEMPORARY	PERMANENT	RESTORED
4	5	1.5	0	0
5	5	1.5	0	0
6	4	1.2	0	0
TOTAL	14	4	0	0

* TOTALS HAVE BEEN ROUNDED TO NEAREST WHOLE NUMBER

SCALE IN METERS

0 10 20 30 40 50

SCALE 1:1000

STATE OF CONNECTICUT - DEPARTMENT OF TRANSPORTATION

STATE PROJECT NO. 92-532

I-95 OVER NEW HAVEN HARBOR
REPLACEMENT OF THE
PEARL HARBOR MEMORIAL BRIDGE

FIG. NO.		
AC-55	INTERTIDAL FLATS IMPACT EAST TRESTLES	2/06

FIGUREAC55.DGN

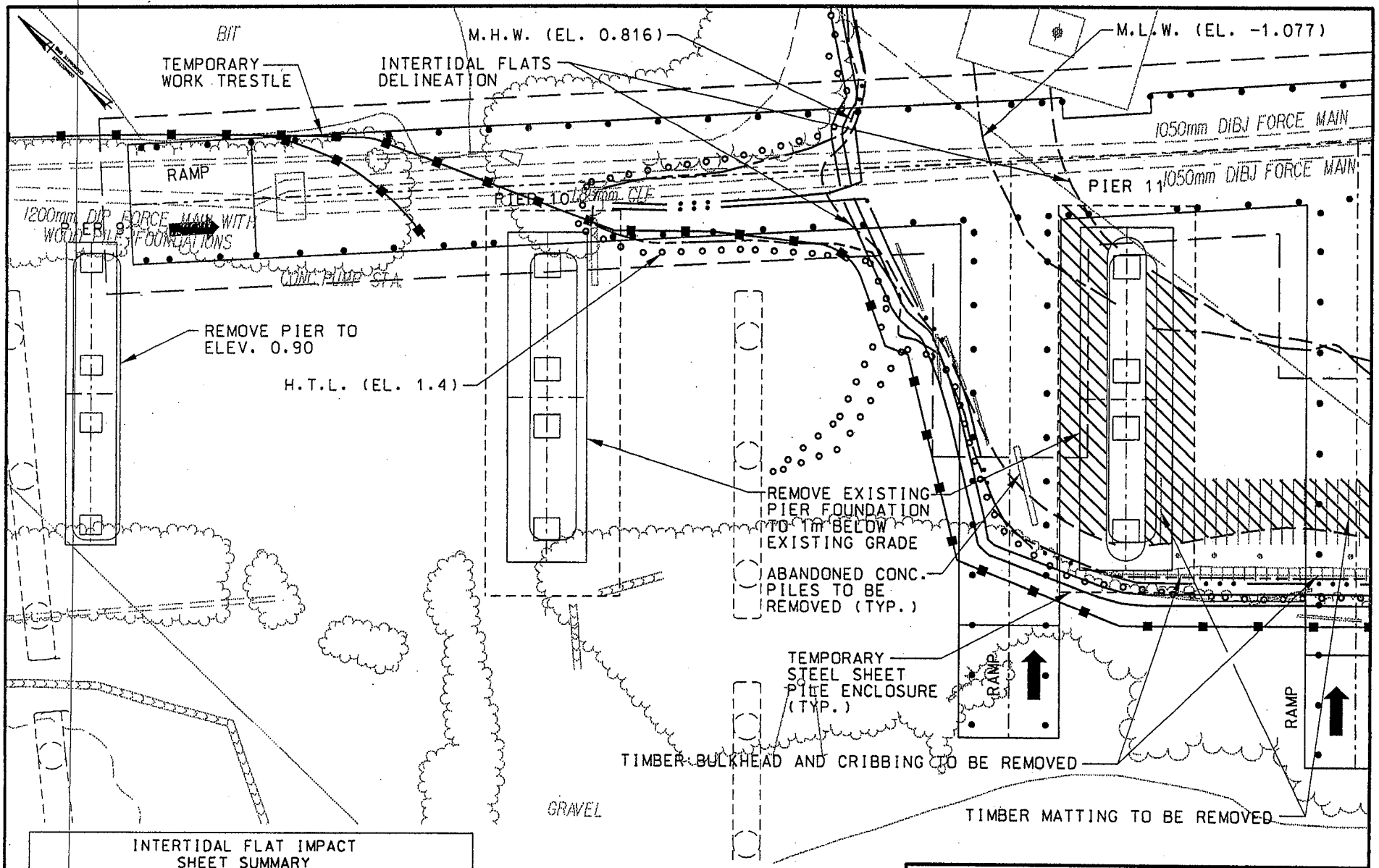

INTERTIDAL FLAT IMPACT SHEET SUMMARY			
SITE	IMPACT m^2		
	TEMPORARY	PERMANENT	RESTORED
PIER 11	236	0	84
TIMBER MATTING	80	0	0
TOTAL	316	0	84

SCALE IN METERS

0 5 10 15 20 25

SCALE 1:500

STATE OF CONNECTICUT - DEPARTMENT OF TRANSPORTATION

STATE PROJECT NO. 92-532

I-95 OVER NEW HAVEN HARBOR
REPLACEMENT OF THE
PEARL HARBOR MEMORIAL BRIDGE

FIG. NO.	INTERTIDAL FLATS IMPACT PIER 11	2/06
AC-56		

FIGUREAC56.DGN

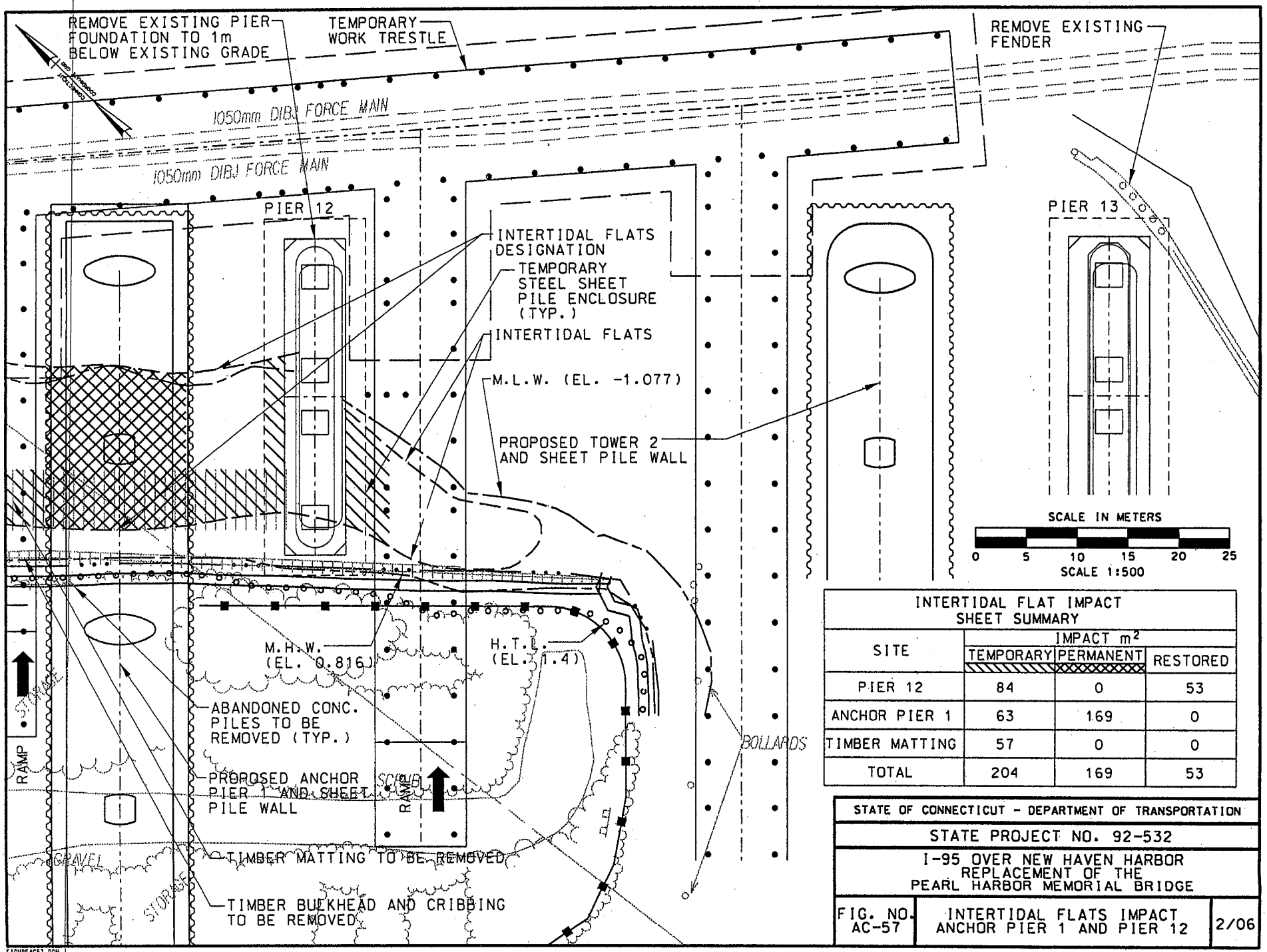

INTERTIDAL FLAT IMPACT SHEET SUMMARY

SITE	IMPACT m^2		
	TEMPORARY	PERMANENT	RESTORED
PIER 12	84	0	53
ANCHOR PIER 1	63	169	0
TIMBER MATTING	57	0	0
TOTAL	204	169	53

STATE OF CONNECTICUT - DEPARTMENT OF TRANSPORTATION

STATE PROJECT NO. 92-532

I-95 OVER NEW HAVEN HARBOR
REPLACEMENT OF THE
PEARL HARBOR MEMORIAL BRIDGE

FIG. NO.		
AC-57	INTERTIDAL FLATS IMPACT ANCHOR PIER 1 AND PIER 12	2/06

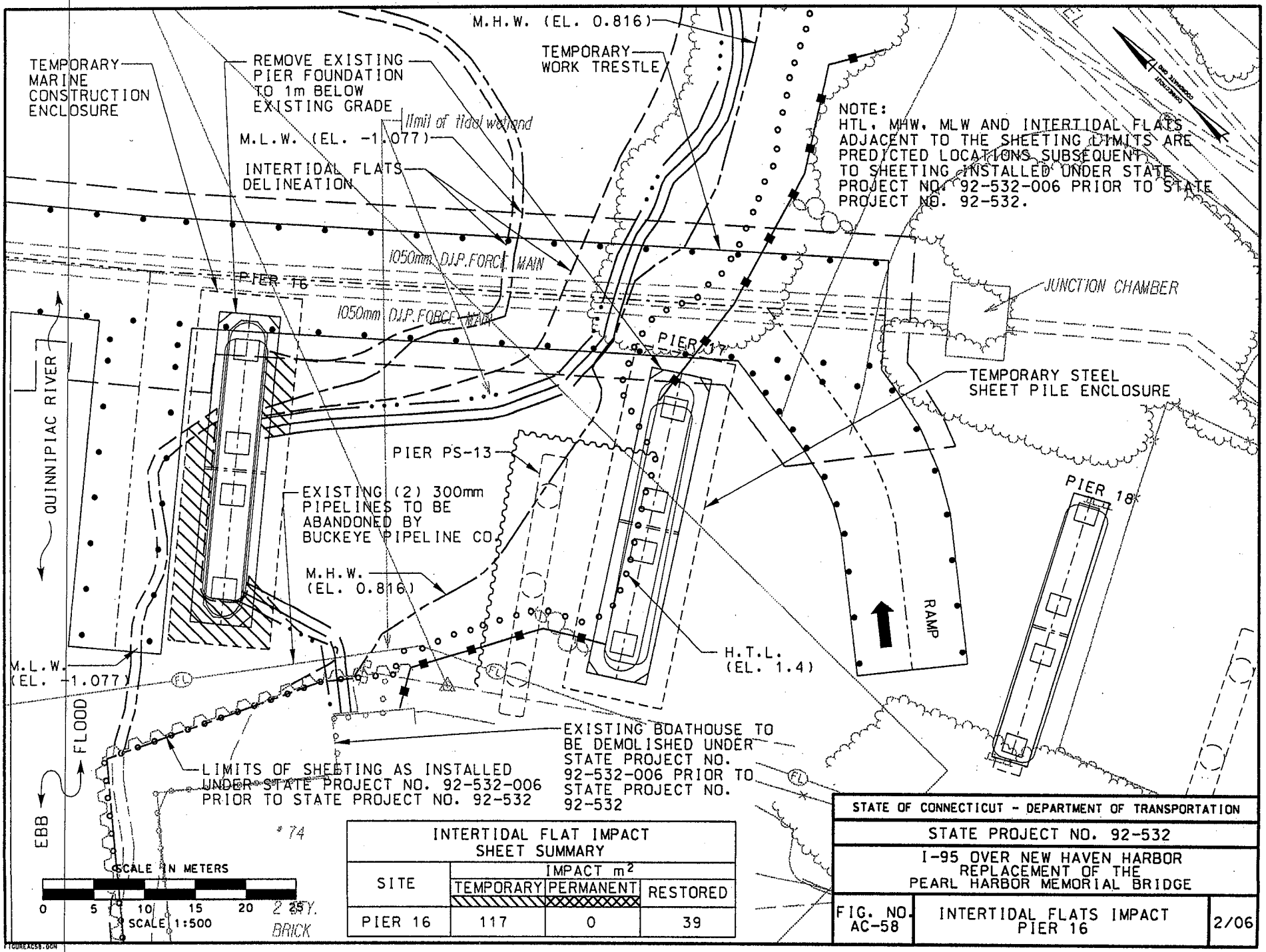

INTERTIDAL FLAT IMPACT SHEET SUMMARY			
SITE	IMPACT m^2		
	TEMPORARY	PERMANENT	RESTORED
PIER 16	117	0	39

STATE OF CONNECTICUT - DEPARTMENT OF TRANSPORTATION

STATE PROJECT NO. 92-532

I-95 OVER NEW HAVEN HARBOR
REPLACEMENT OF THE
PEARL HARBOR MEMORIAL BRIDGE

FIG. NO.		
AC-58	INTERTIDAL FLATS IMPACT PIER 16	2/06

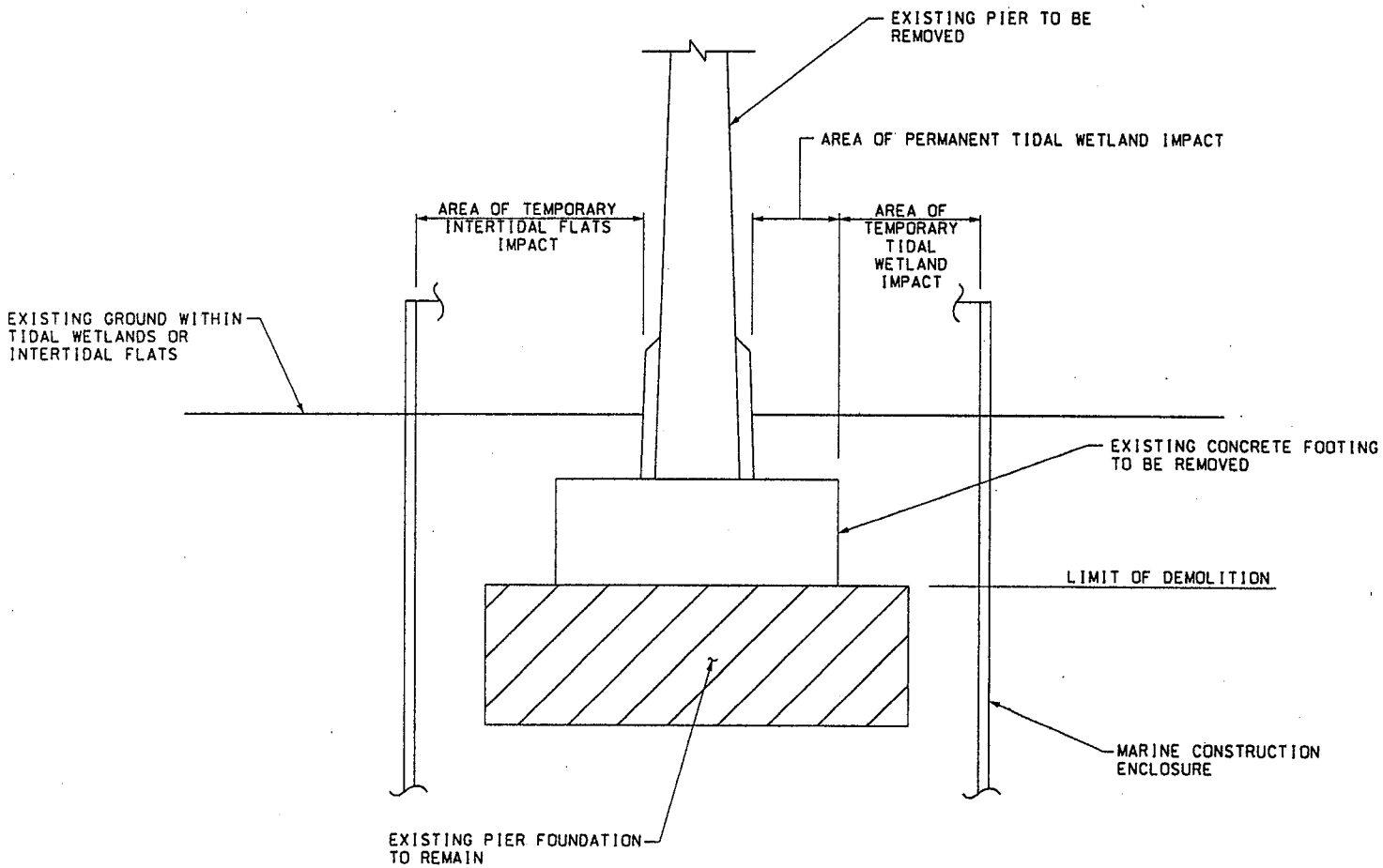

STATE OF CONNECTICUT - DEPARTMENT OF TRANSPORTATION		
STATE PROJECT NO. 92-532		
I-95 OVER NEW HAVEN HARBOR REPLACEMENT OF THE PEARL HARBOR MEMORIAL BRIDGE		
FIG. NO. AC-59	TYPICAL EXISTING PIER IMPACT AREA	2/06

FIGUREAC59.DGN

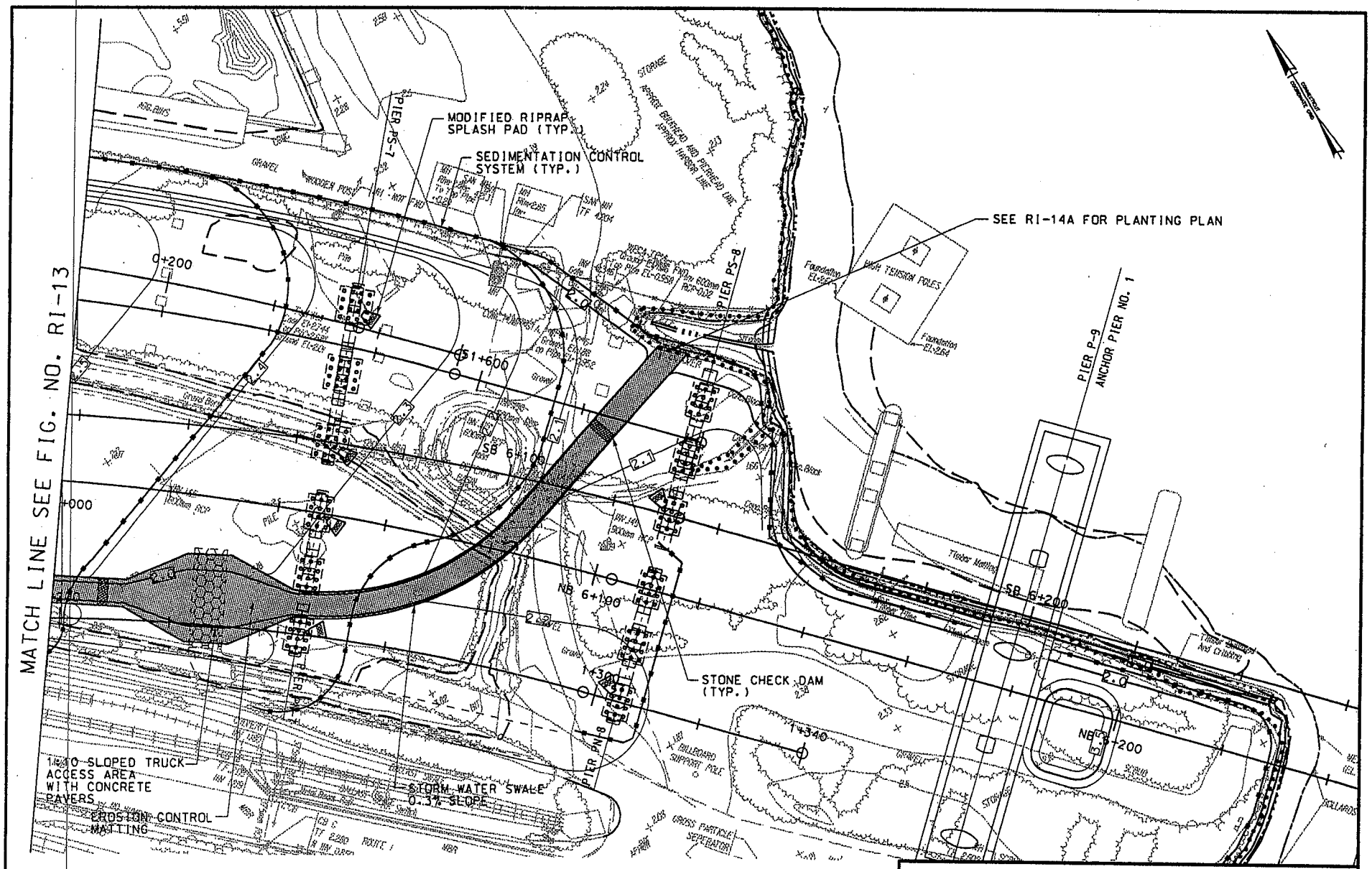

STATE OF CONNECTICUT - DEPARTMENT OF TRANSPORTATION		
STATE PROJECT NO. 92-532		
I-95 OVER NEW HAVEN HARBOR REPLACEMENT OF THE PEARL HARBOR MEMORIAL BRIDGE		
FIG. NO. AC-60	STORM WATER SWALE OUTLET	2/06

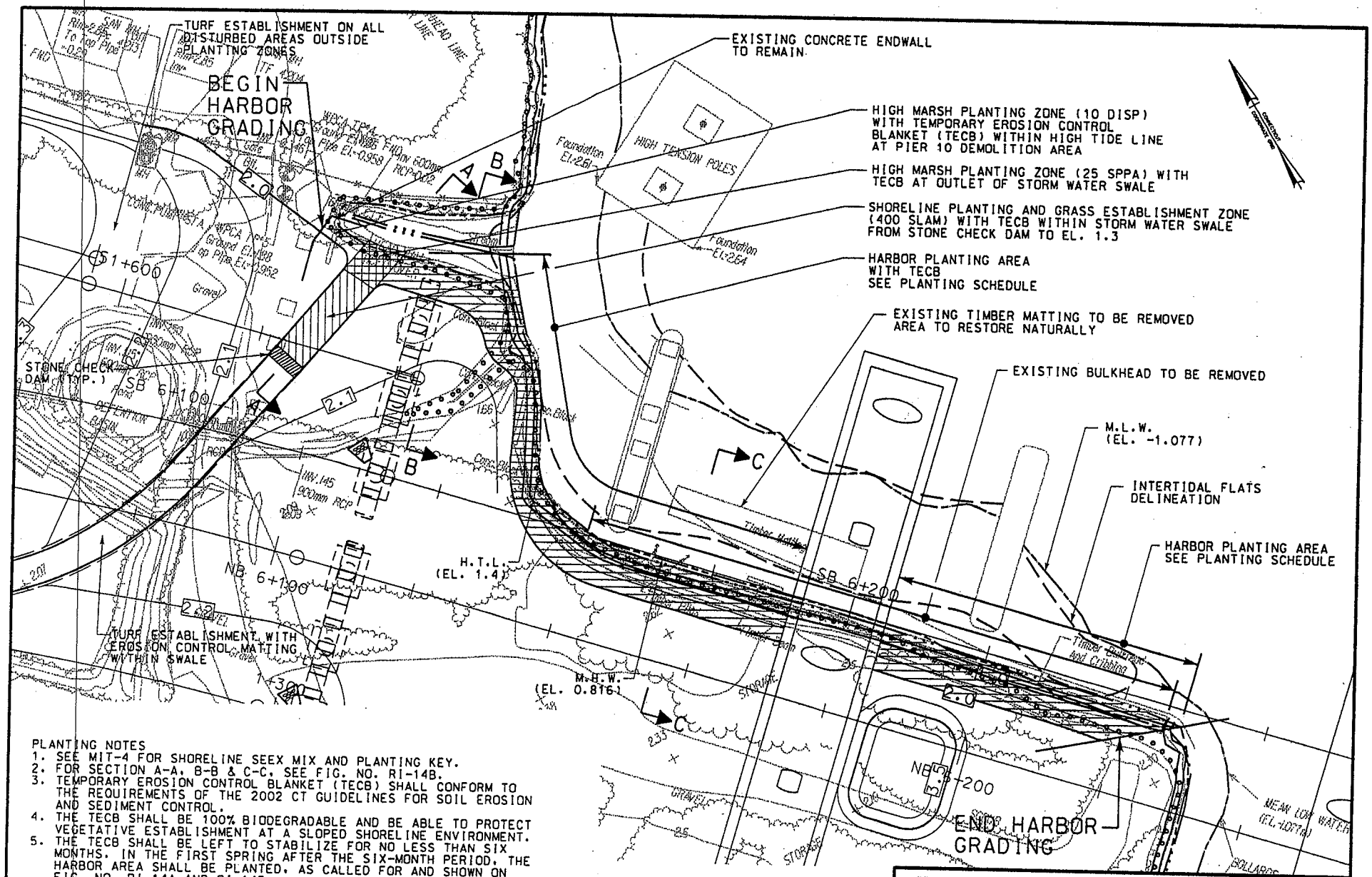

PLANTING NOTES

1. SEE MIT-4 FOR SHORELINE SEEX MIX AND PLANTING KEY.
2. FOR SECTION A-A, B-B & C-C, SEE FIG. NO. RI-14B.
3. TEMPORARY EROSION CONTROL BLANKET (TECB) SHALL CONFORM TO THE REQUIREMENTS OF THE 2002 CT GUIDELINES FOR SOIL EROSION AND SEDIMENT CONTROL.
4. THE TECB SHALL BE 100% BIODEGRADABLE AND BE ABLE TO PROTECT VEGETATIVE ESTABLISHMENT AT A SLOPED SHORELINE ENVIRONMENT.
5. THE TECB SHALL BE LEFT TO STABILIZE FOR NO LESS THAN SIX MONTHS. IN THE FIRST SPRING AFTER THE SIX-MONTH PERIOD, THE HARBOR AREA SHALL BE PLANTED, AS CALLED FOR AND SHOWN ON FIG. NO. RI-14A AND RI-14B.
6. THE TECB SHALL HAVE CIRCULAR HOLES CUT THROUGH TO INSTALL PLANT PLUGS.

PLANTING SCHEDULE:

- LOW MARSH PLANTING ZONE TO ELEVATION 0.7m (150 SPAL)
- HIGH MARSH PLANTING ZONE BETWEEN ELEVATION 0.7m AND 1.3m (700 SPPA)
- SHORELINE PLANTING AND GRASS ESTABLISHMENT ZONE TO ELEVATION 2.0m (100 MYPE)

SCALE IN METERS

0 15 30 45

SCALE 1:750

STATE OF CONNECTICUT - DEPARTMENT OF TRANSPORTATION		
STATE PROJECT NO. 92-532		
I-95 OVER NEW HAVEN HARBOR REPLACEMENT OF THE PEARL HARBOR MEMORIAL BRIDGE		
FIG. NO. AC-61	WEST APPROACH PLANTING PLAN	2/06

FIGURE AC61.DGN

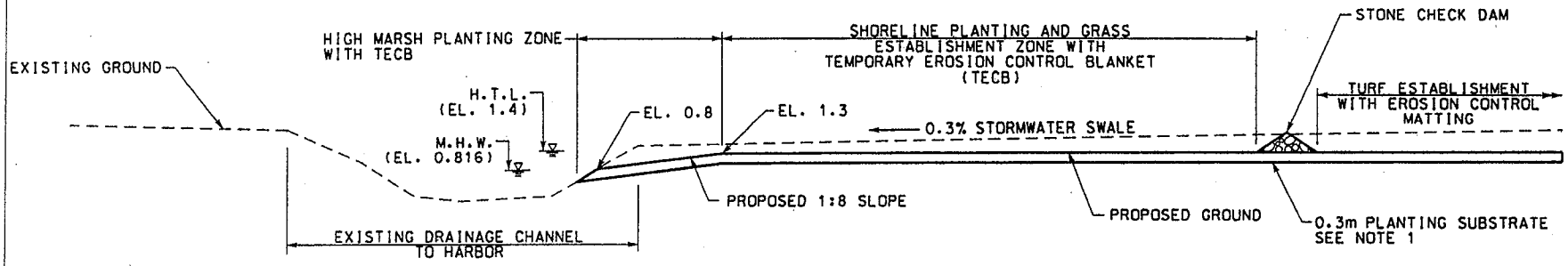

SECTION A-A

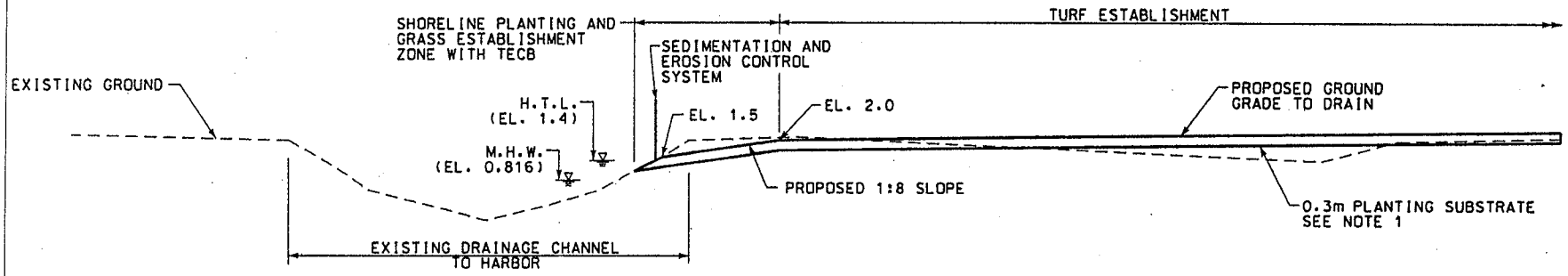

SECTION B-B

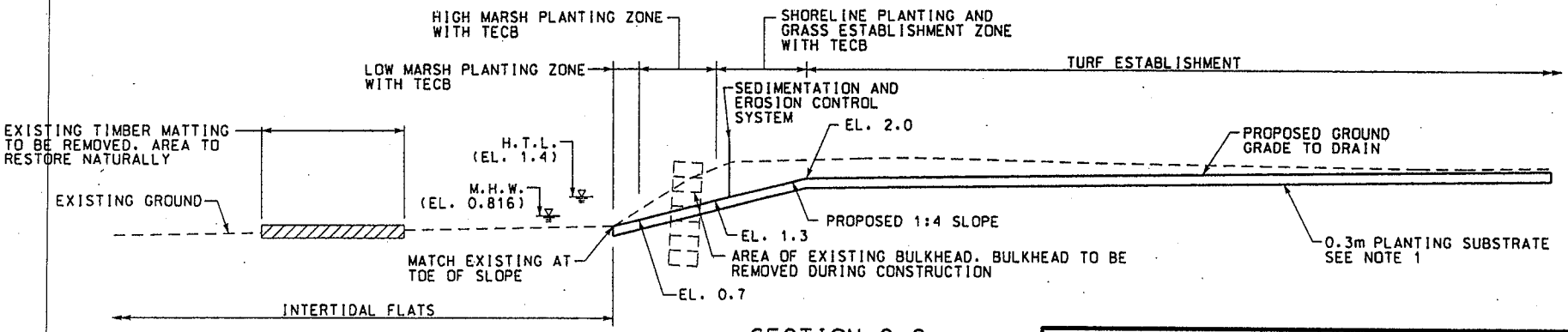

SECTION C-C

NOTES:

1. SEE FIG. NO. MIT-2 FOR PLANTING SUBSTRATE NOTES.
2. SEE FIG. NO. MIT-4 FOR SHORELINE SEED MIX AND PLANTING KEY.
3. SEE FIG. NO. RI-14A FOR PLANTING NOTES AND SCHEDULE.

SCALE IN METERS

0 2 4 6 8 10

SCALE 1:200

STATE OF CONNECTICUT - DEPARTMENT OF TRANSPORTATION		
STATE PROJECT NO. 92-532		
I-95 OVER NEW HAVEN HARBOR REPLACEMENT OF THE PEARL HARBOR MEMORIAL BRIDGE		
FIG. NO. AC-62	WEST APPROACH HARBOR AREA CROSS SECTIONS	2/06

FIGUREAC62.DGN