PUBLIC NOTICE

US Army Corps
of Engineers ®
New England District

Maine Project Office
675 Western Ave. #3
Manchester, Maine 04531

Date: MAY 9, 2006
Comment Period Ends: JUNE 9, 2006
File Number: NAE-2006-1359
In Reply Refer To: Peter Tischbein
Or by e-mail: peter.tischbein@usace.army.mil

The District Engineer has received a permit application from the applicant below to **conduct work in waters of the United States** as described below. The Corps is soliciting comments on both the project itself and the range of issues to be addressed in the environmental documentation.

APPLICANT
Mason Station, LLC, 262 Bath Road, Wiscasset, Maine 04578

ACTIVITY
The applicant proposes to construct a 289 slip marina at the marina terminal of the former Mason Station electrical generating station. The marina will be primarily used for recreational boating use. The marina facility will include the installation of a pile supported boardwalk, travel lift, pumpout stations, a fuel station and a new boatyard facility on the upland adjacent to the proposed marina and former power plant. The travel lift will entail placing 145 sq. ft. of fill below the high tide line of the upper intertidal zone of the shoreline. The project construction will be phased over a number of years. No moorings or dredging are proposed as part of this application. A detailed description and plans of the applicant's activity are attached.

WATERWAY AND LOCATION OF THE PROPOSED WORK
This work is proposed on the west side of the Sheepscot River off of Birch Point Road in the town of Wiscasset, Lincoln Co., Maine. The proposed location on the USGS Westport quadrangle sheet is at UTM coordinates 43.9903891 N and 69.6693027 W.

AUTHORITY
Permits are required pursuant to:
_X__Section 10 of the Rivers and Harbors Act of 1899
_X_Section 404 of the Clean Water Act
_____Section 103 of the Marine Protection, Research and Sanctuaries Act).

The decision whether to issue a permit will be based on an evaluation of the probable impact of the proposed activity on the public interest. That decision will reflect the national concern for both protection and utilization of important resources. The benefit which may reasonably accrue from the proposal must be balanced against its reasonably foreseeable detriments. All factors which may be relevant to the proposal will be considered, including the cumulative effects thereof; among those are: conservation, economics, aesthetics, general environmental concerns, wetlands, cultural value, fish and wildlife values, flood hazards, flood plain value, land

use, navigation, shoreline erosion and accretion, recreation, water supply and conservation, water quality, energy needs, safety, food production and, in general, the needs and welfare of the people.

The Corps of Engineers is soliciting comments from the public; Federal, state, and local agencies and officials; Indian Tribes; and other interested parties in order to consider and evaluate the impacts of this proposed activity. Any comments received will be considered by the Corps of Engineers to determine whether to issue, modify, condition or deny a permit for this proposal. To make this decision, comments are used to assess impacts on endangered species, historic properties, water quality, general environmental effects, and the other public interest factors listed above. Comments are used in the preparation of an Environmental Assessment and/or an Environmental Impact Statement pursuant to the National Environmental Policy Act. Comments are also used to determine the need for a public hearing and to determine the overall public interest of the proposed activity.

Where the activity involves the discharge of dredged or fill material into waters of the United States or the transportation of dredged material for the purpose of disposing it in ocean waters, the evaluation of the impact of the activity in the public interest will also include application of the guidelines promulgated by the Administrator, U.S Environmental Protection Agency, under authority of Section 404(b) of the Clean Water Act, and/or Section 103 of the Marine Protection Research and Sanctuaries Act of 1972 as amended.

In order to properly evaluate the proposal, we are seeking public comment. Anyone wishing to comment is encouraged to do so. **Comments should be submitted in writing by the above date.** If you have any questions, please contact Peter Tischbein at the Maine Project Office (207) 623-8367.

Any person may request, in writing, within the comment period specified in this notice, that a public hearing be held to consider the application. Requests for a public hearing shall specifically state the reasons for holding a public hearing. The Corps holds public hearings for the purpose of obtaining public comments when that is the best means for understanding a wide variety of concerns from a diverse segment of the public.

ESSENTIAL FISH HABITAT

The Magnuson-Stevens Fishery Conservation and Management Act, as amended by the Sustainable Fisheries Act of 1996 (Public Law 104-267), requires all federal agencies to consult with the National Marine Fisheries Service on all actions, or proposed actions, permitted, funded, or undertaken by the agency, that may adversely affect Essential Fish Habitat (EFH).

This project will impact 16 acres of Essential Fish Habitat (EFH) for the attached listed marine species. This habitat consists of intertidal and subtidal waters with depths ranging between 0 and 50 ft . The substrate in the intertidal and shallow subtidal zones consists of gravelled mud and mud. Loss of this habitat may adversely affect (name species, provide a brief description of impact to habitat or species and any anticipated mitigation). However, the District Engineer has made a preliminary determination that the site-specific adverse effect will not be substantial. Further consultation with the National Marine Fisheries Service regarding EFH conservation recommendations is being conducted and will be concluded prior to the final decision.

CENAE-R
FILE NO. NAE-2006-1359

106 REVIEW ONGOING

Based on his initial review, the District Engineer has determined that the proposed work may impact properties listed in, or eligible for listing in, the National Register of Historic Places. Additional review and consultation to fulfill requirements under Section 106 of the National Historic Preservation Act of 1966, as amended, will be ongoing as part of the permit review process.

Pursuant to the Endangered Species Act, the District Engineer is hereby requesting that the appropriate Federal Agency provide comments regarding the presence of and potential impacts to listed species or its critical habitat.

The States of Connecticut, Maine, Massachusetts, New Hampshire and Rhode Island have approved Coastal Zone Management Programs. Where applicable the applicant states that any proposed activity will comply with and will be conducted in a manner that is consistent with the approved Coastal Zone Management Program. By this Public Notice, we are requesting the State concurrence or objection to the applicant's consistency statement.

The initial determinations made herein will be reviewed in light of facts submitted in response to this notice. All comments will be considered a matter of public record. Copies of letters of objection will be forwarded to the applicant who will normally be requested to contact objectors directly in an effort to reach an understanding.

The following authorizations have been applied for, or have been, or will be obtained:

(X) Permit, License or Assent from State.
( ) Permit from Local Wetland Agency or Conservation Commission.
(X) Water Quality Certification in accordance with Section 401 of the Clean Water Act.

THIS NOTICE IS NOT AN AUTHORIZATION TO DO ANY WORK.

For more information on the New England District Corps of Engineers programs, visit our website at http://www.nae.usace.army.mil.

Frank J. Del Giudice
Chief, Permits & Enforcement Branch
Regulatory Division

If you would prefer not to continue receiving Public Notices, please contact Ms. Tina Chaisson at (978) 318-8058 or e-mail her at bettina.m.chaisson@usace.army.mil. You may also check here ( ) and return this portion of the Public Notice to: Bettina Chaisson, Regulatory Division, U.S. Army Corps of Engineers, 696 Virginia Road, Concord, MA 01742-2751.

NAME: _____
ADDRESS: _____

Summary of Essential Fish Habitat (EFH) Designation

10' x 10' Square Coordinates:

Boundary	North	East	South	West
Coordinate	43° 50.0' N	69° 40.0' W	43° 40.0' N	69° 50.0' W

Square Description (i.e. habitat, landmarks, coastline markers): Waters within the square affecting south of Georgetown, ME., Bath, ME., Phippsburg, ME., Woolrich, ME., and Westport, ME., including those waters affecting Georgetown Island, from eastern Cape Small to Small Point. Also, these waters affect Squirrel Point of Arrowsic Island, within the estuary to the Kennebec and Sheepscot River. Other affected features within this square include: Lower Mark I., Cat Ledges, West Southport, Sheepscot Bay, Griffith Head, The Black Rocks, The Sisters, Tom Rock, White Ledge, Seguin Ledges, Salter I., Stage I., Long I., Pond I., Pond I. Shoal, Ellingwood Rock, Mile Ledge, Camel Ground, Fox Is., Bold Dick Rock, Heron I., Seal I., Halibut Rocks, Sagadahoc Bay, Atkins Bay, and the Five Is.

Species	Eggs	Larvae	Juveniles	Adults
Atlantic cod *(Gadus morhua)*			X	X
haddock *(Melanogrammus aeglefinus)*				
pollock *(Pollachius virens)*			X	
whiting *(Merluccius bilinearis)*			X	X
offshore hake *(Merluccius albidus)*				
red hake *(Urophycis chuss)*			X	X
white hake *(Urophycis tenuis)*			X	X
redfish *(Sebastes fasciatus)*	n/a			
witch flounder *(Glyptocephalus cynoglossus)*				
winter flounder *(Pleuronectes americanus)*	X	X	X	X
yellowtail flounder *(Pleuronectes ferruginea)*	X	X		
windowpane flounder *(Scopthalmus aquosus)*	X	X	X	X
American plaice *(Hippoglossoides platessoides)*	X	X	X	X

ocean pout *(Macrozoarces americanus)*	X	X	X	X
Atlantic halibut *(Hippoglossus hippoglossus)*	X	X	X	X
Atlantic sea scallop *(Placopecten magellanicus)*	X	X	X	X
Atlantic sea herring *(Clupea harengus)*		X	X	X
monkfish *(Lophius americanus)*				
bluefish *(Pomatomus saltatrix)*			X	X
long finned squid *(Loligo pealei)*	n/a	n/a		
short finned squid *(Illex illecebrosus)*	n/a	n/a		
Atlantic butterfish *(Peprilus triacanthus)*				
Atlantic mackerel *(Scomber scombrus)*			X	X
summer flounder *(Paralicthys dentatus)*				
scup *(Stenotomus chrysops)*	n/a	n/a		
black sea bass *(Centropristus striata)*	n/a			
surf clam *(Spisula solidissima)*	n/a	n/a		
ocean quahog *(Artica islandica)*	n/a	n/a		
spiny dogfish *(Squalus acanthias)*	n/a	n/a		
tilefish *(Lopholatilus chamaeleonticeps)*				
bluefin tuna *(Thunnus thynnus)*				X

Figure 1. Location of the proposed Mason Station LLC marina and travel lift dock at the former Mason Station plant in iscasset, Maine. Source: Maptech USGS 1:100000 topographic map.

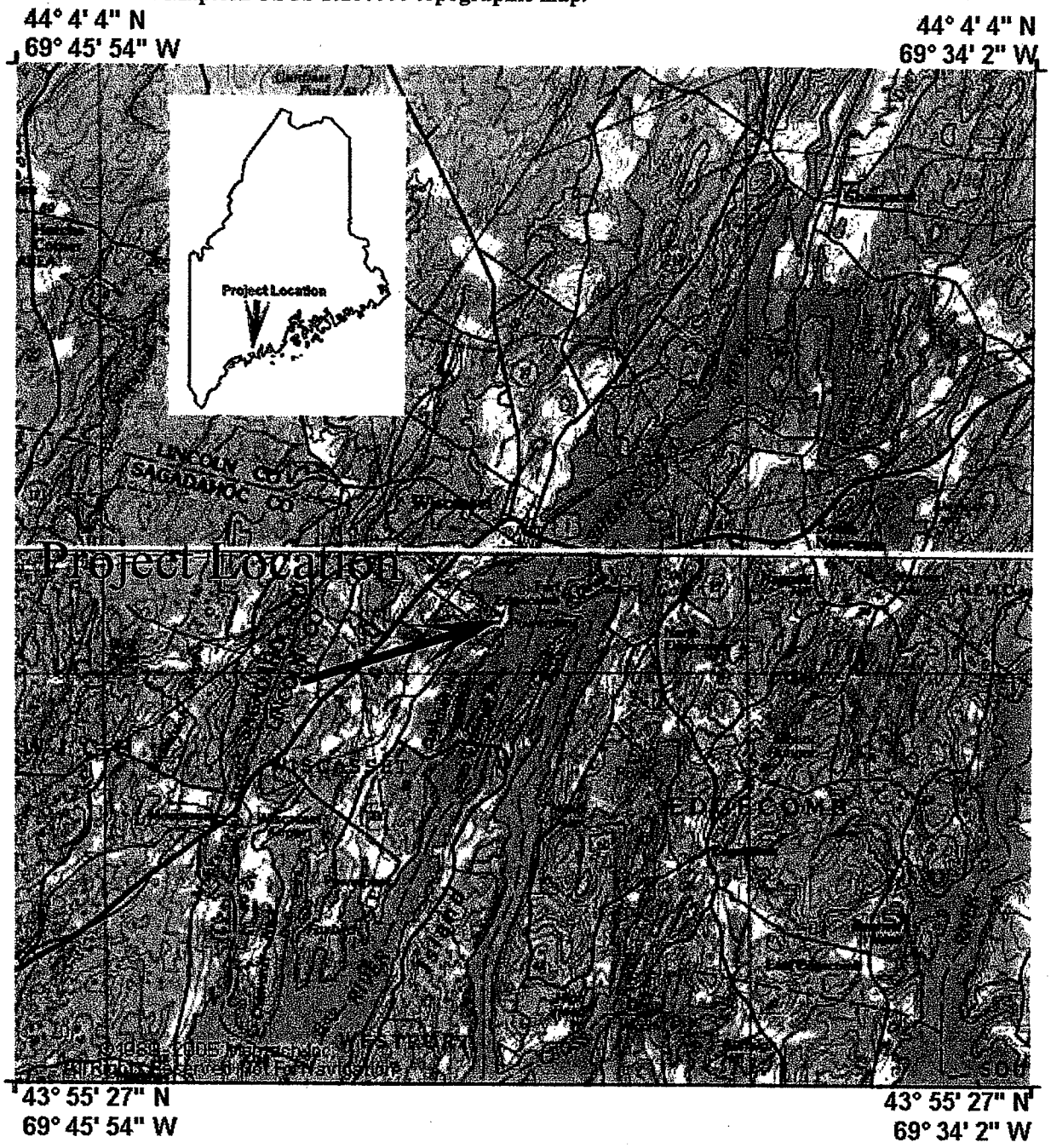

Moody Mountain Environmental 137 Diamond Str Searsmont ME 04973 ph.fax 207-763-4263 moodymtn@tidewater.net

Figure 3. Location of the proposed Mason Station LLC marina and travel lift dock at the former Mason Station plant in Wiscasset, Maine. Source: Maptech NOAA 1:40000 navigation chart map.

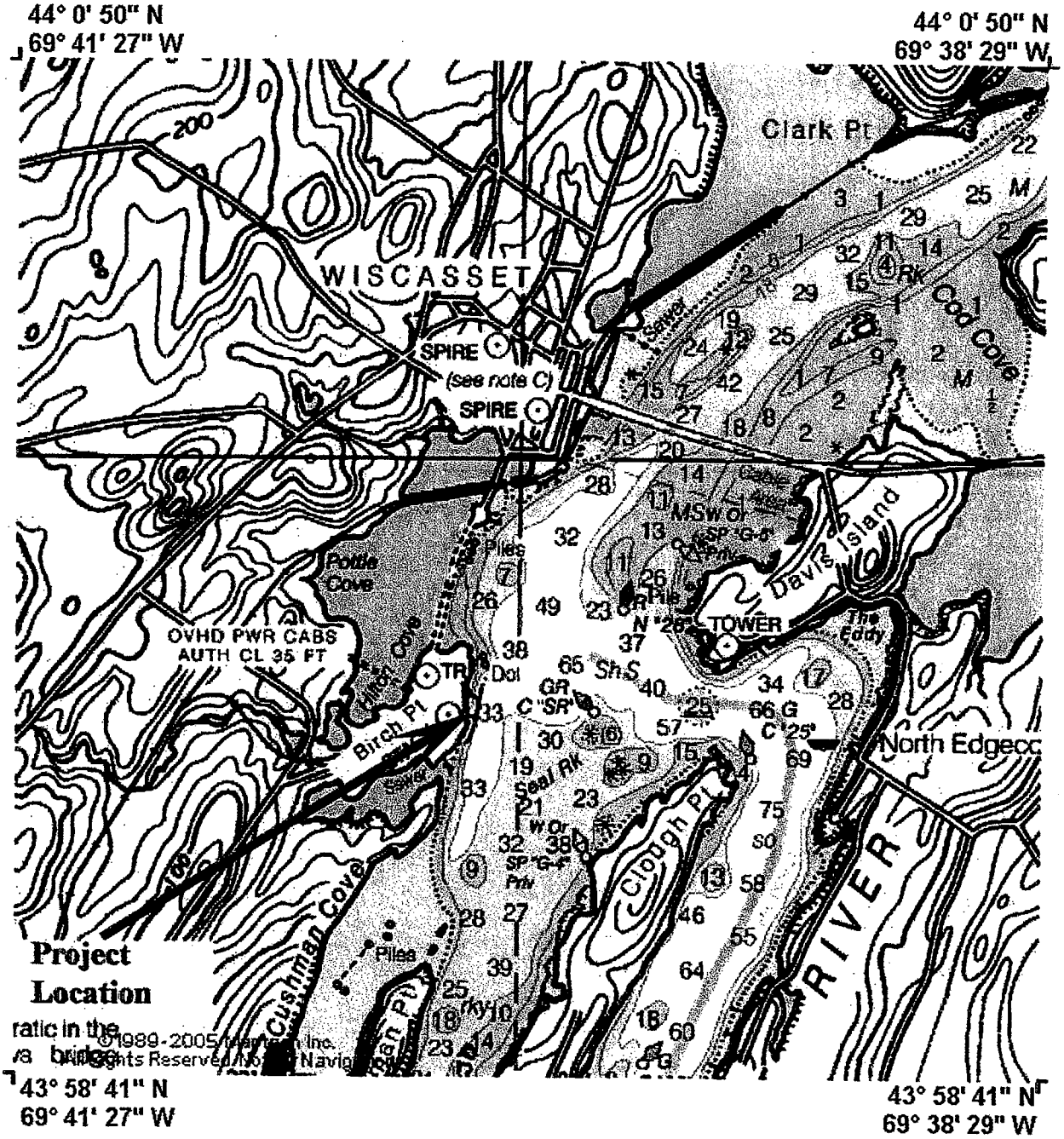

Moody Mountain Environmental 137 Diamond Str Searsmont ME 04973 ph.fax 207-763-4263 moodymtn@tidewater.net

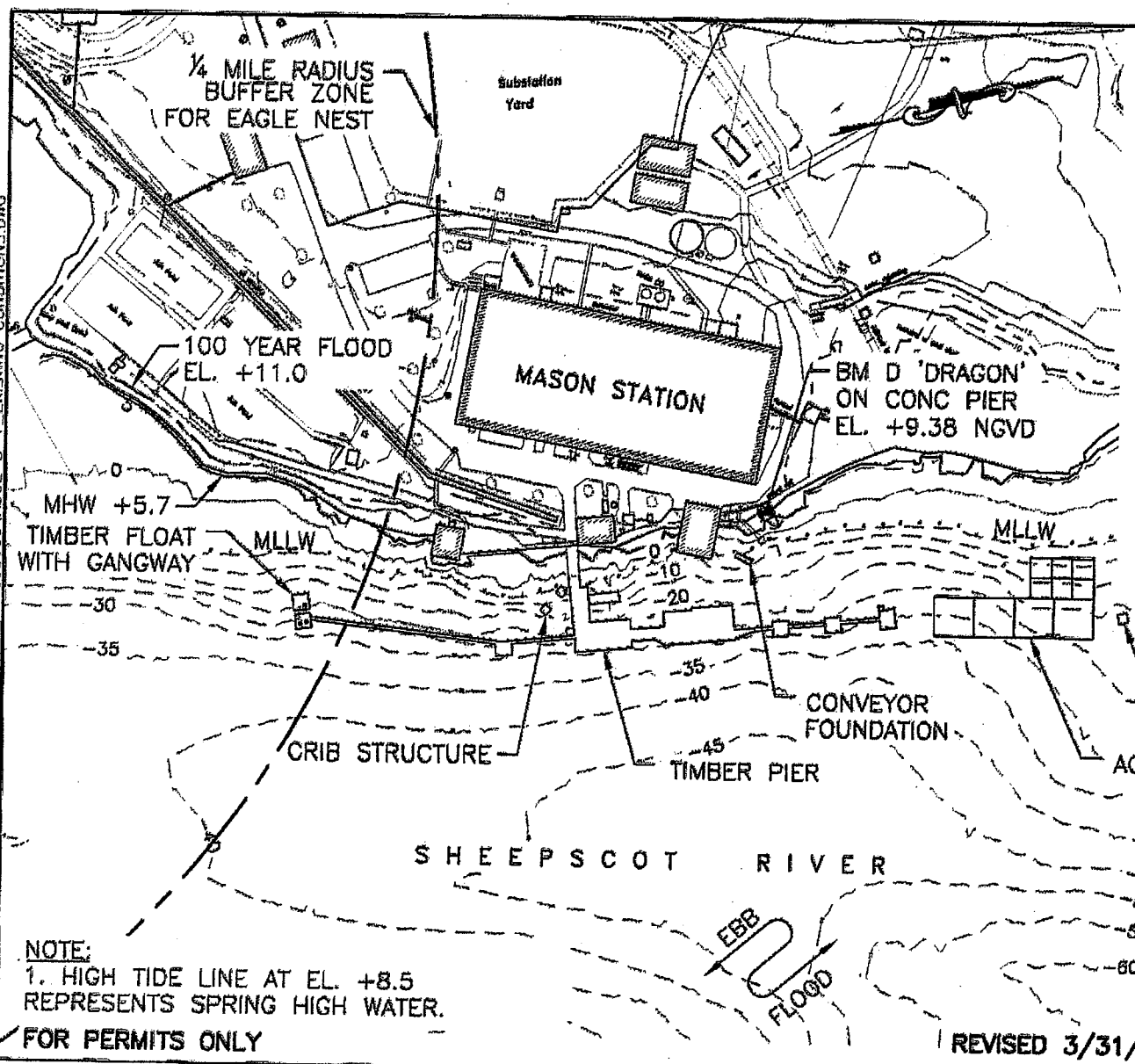

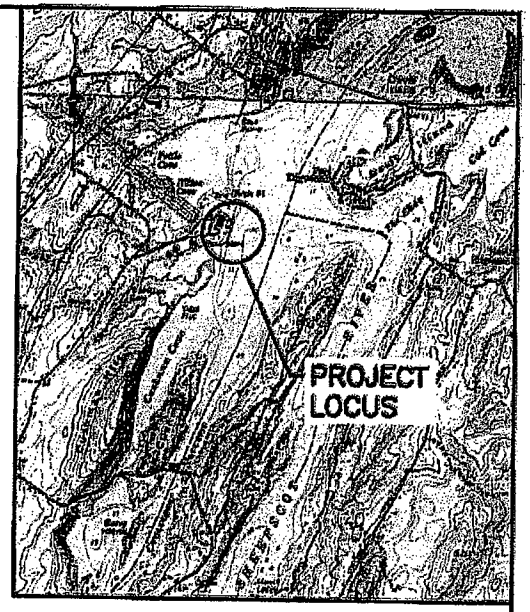

LOCUS MAP
SCALE: 1" = 5,000'

NOTE:
1. HIGH TIDE LINE AT EL. +8.5 REPRESENTS SPRING HIGH WATER.

FOR PERMITS ONLY

REVISED 3/31/06

0 200
SCALE: 1" = 200'

100 YR FLOOD	+11.0	NGVD	0.0
HTL	+8.5	MLLW	-3.8
MHW	+5.7		

TITLE: EXISTING CONDITIONS MASON STATION

IN: WISCASSET
AT: SHEEPSCOT RIVER
COUNTY: LINCOLN STATE: ME

BCE Bourne Consulting Engineering

PURPOSE: MARINA

APPLICATION BY: POINT EAST 262 BATH RD WISCASSET, ME

SHEET 1 OF 13

DATE: MARCH 13, 2006

File: X:\25536-\25538\TASK 05B FINAL PERMIT\FINAL PERMIT REV 033106\ACOE S-1 EXISTING CONDITIONS.DWG

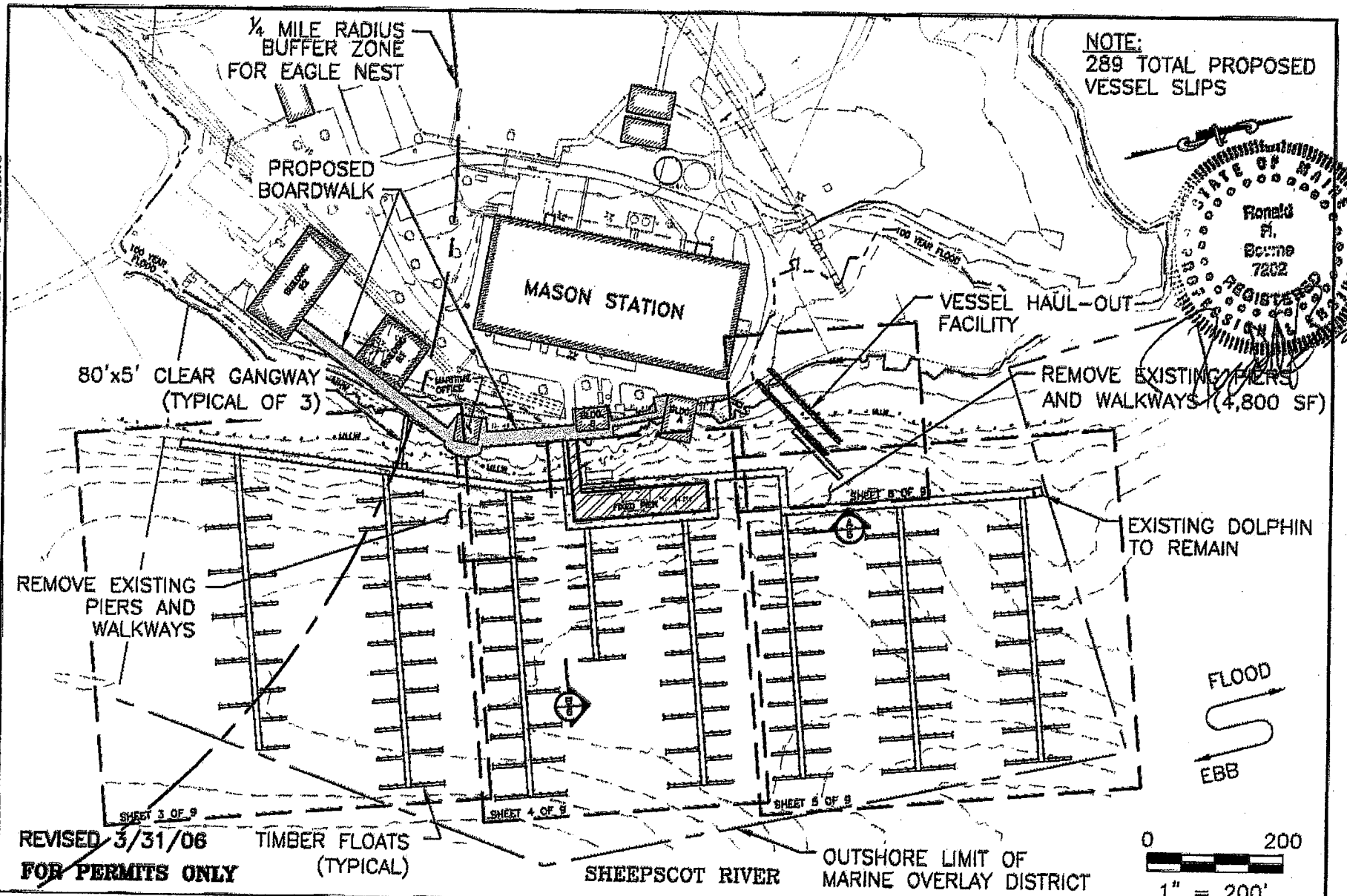

REVISED 3/31/06

FOR PERMITS ONLY

100 YR FLOOD	+11.0	NGVD	0.0
HTL	+8.5	MLLW	-3.8
MHW	+5.7		

TITLE: PROPOSED CONDITIONS MASON STATION

IN: WISCASSET
AT: SHEEPSCOT RIVER
COUNTY: LINCOLN STATE: ME

BCE Bourne Consulting Engineering

PURPOSE: MARINA

APPLICATION BY: POINT EAST 262 BATH RD WISCASSET, ME

SHEET 2 OF 13

DATE: MARCH 13, 2006

File: X:\25536-\25538\TASK 05B FINAL PERMIT\FINAL PERMIT REV 033106\ACOE S-2 TO 5 & 8 PROPOSED.DWG

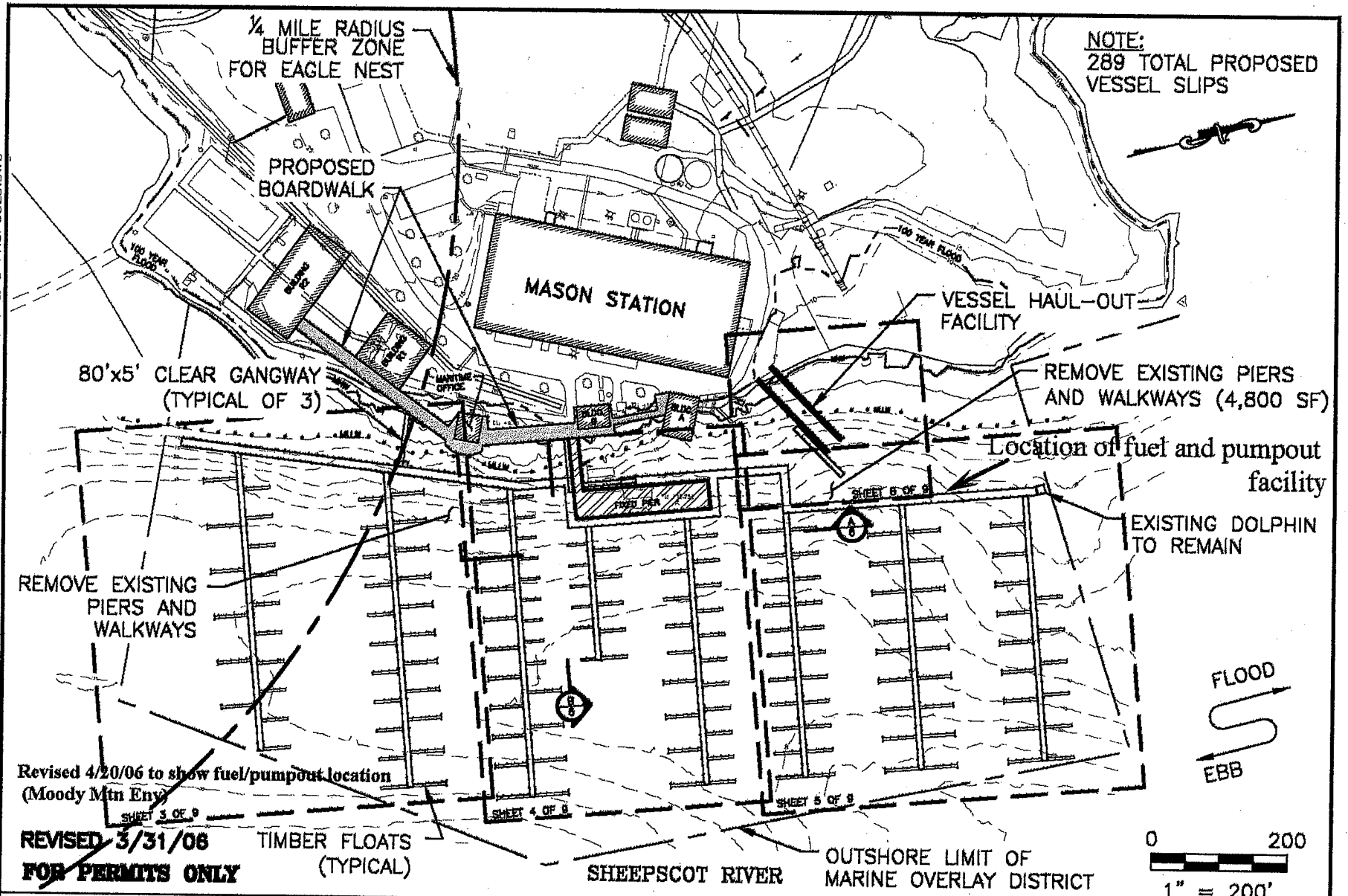

File: X:\25536-\25538\TASK 05B FINAL PERMIT\FINAL PERMIT REV 033106\ACOE S-2 TO 5 & 8 PROPOSED.DWG

100 YR FLOOD	+11.0	NGVD	0.0
HTL	+8.5	MLLW	-3.8
MHW	+5.7		

TITLE: **PROPOSED CONDITIONS MASON STATION**

IN: **WISCASSET**
AT: **SHEEPSCOT RIVER**
COUNTY: **LINCOLN** STATE: **ME**

BCE Bourne Consulting Engineering

PURPOSE: **MARINA**

APPLICATION BY: **POINT EAST 262 BATH RD WISCASSET, ME**

SHEET **2b** OF **12**

DATE: **MARCH 13, 2006**

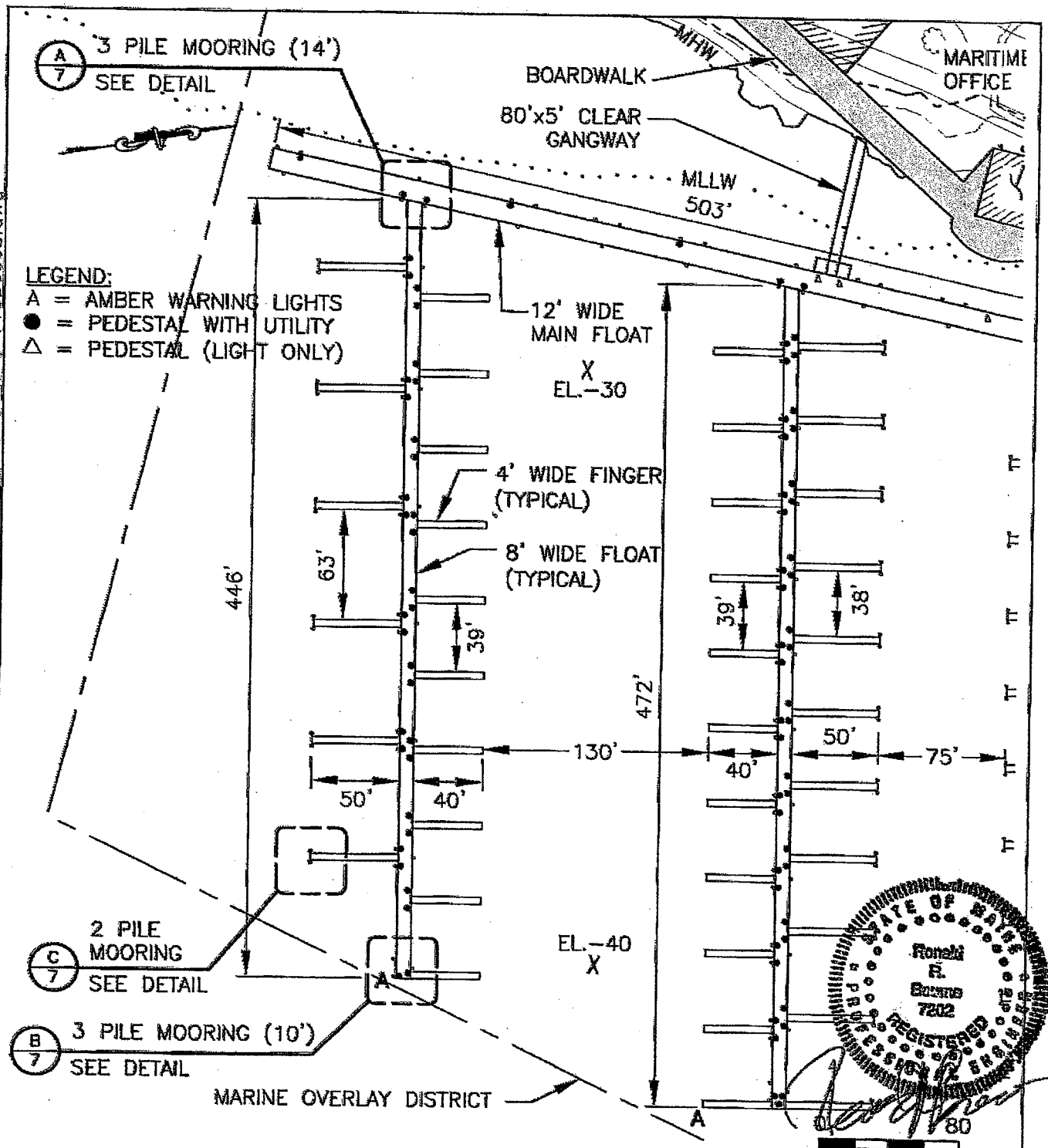

FOR PERMITS ONLY REVISED 3/31/06 SCALE: 1" = 80'

PURPOSE: MARINA	TITLE: MARINA PLAN SOUTH	APPLICATION BY: POINT EAST 262 BATH RD WISCASSET, ME
100 YR FLOOD +11.0 HTL +8.5 MHW 5.7 NGVD 0.0 MLLW -3.8	BCE Bourne Consulting Engineering	IN: WISCASSET AT: SHEEPSCOT RIVER COUNTY: COUNTY STATE: STATE SHEET 3 OF 13 DATE: 3/13/06

File: X:\25536-\25538\Task 05b Final Permit\Final Permit REV 033106\ACOE S-2 TO 5 & 8 Proposed.dwg

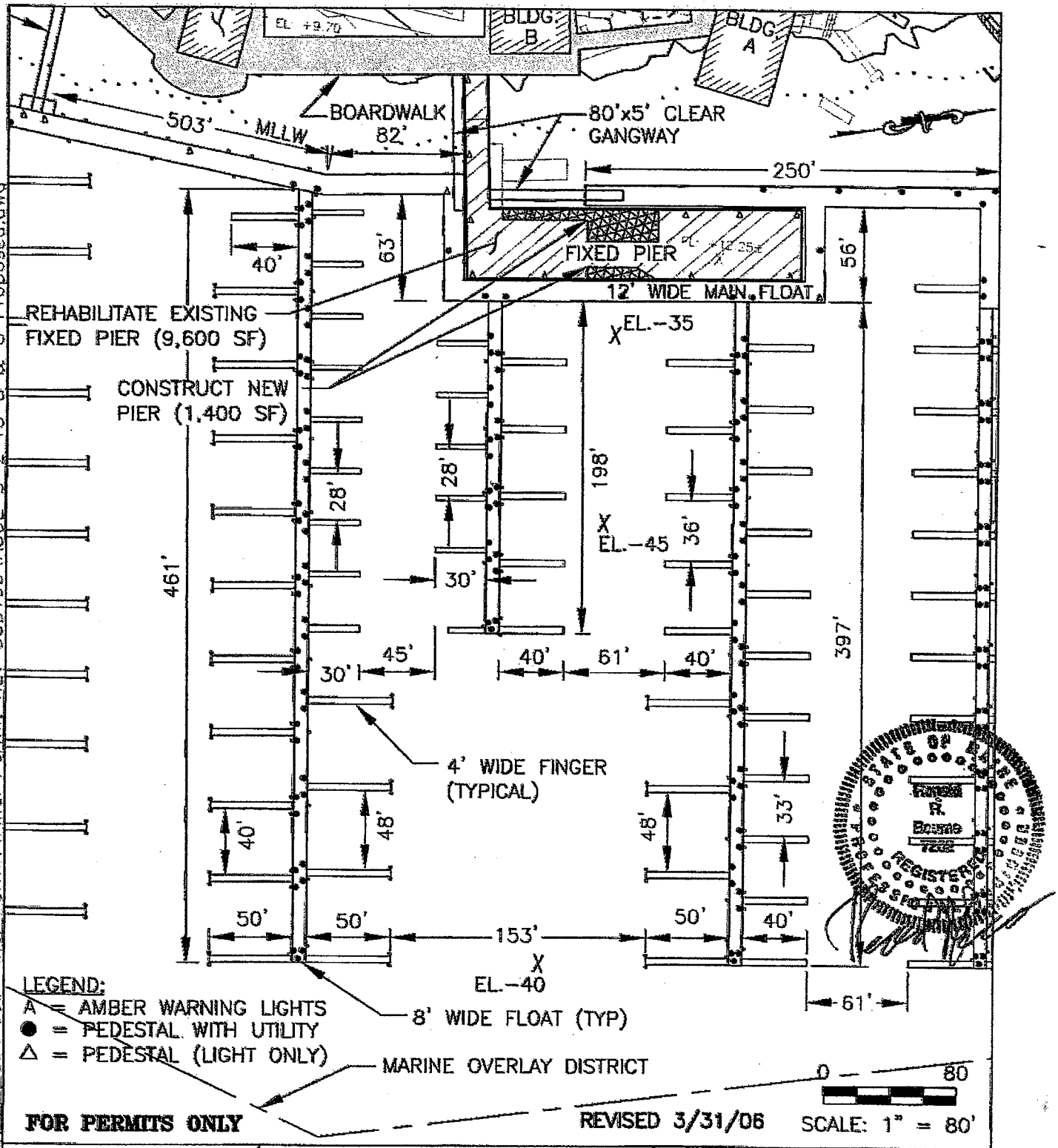

File: X:\25536-\25538\Task 05b Final Permit\Final Permit REV 033106\ACOE S-2 TO 5 & 8 Proposed.dwg

PURPOSE: MARINA	TITLE: MARINA PLAN CENTER	APPLICATION BY: POINT EAST 262 BATH RD WISCASSET, ME
100 YR FLOOD +11.0 HTL +8.5 MHW 5.7 NGVD 0.0 MLLW -3.8	BCE Bourne Consulting Engineering	IN: WISCASSET AT: SHEEPSCOT RIVER COUNTY: COUNTY STATE: STATE SHEET 4 OF 13 DATE: 3/13/06

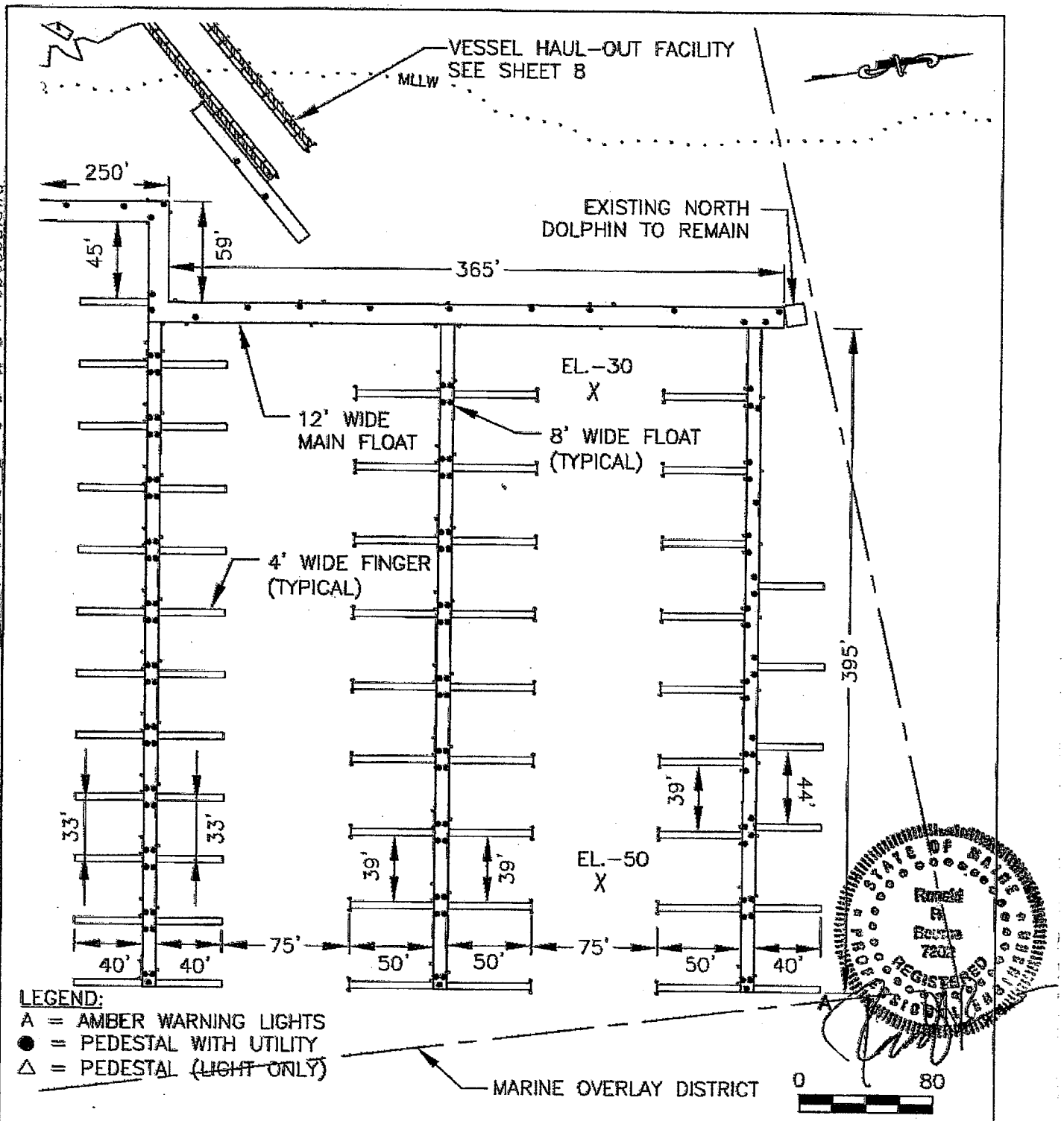

FOR PERMITS ONLY

REVISED 3/31/06

SCALE: 1" = 80'

PURPOSE:	TITLE:	APPLICATION BY:
MARINA	MARINA PLAN NORTH	POINT EAST 262 BATH RD WISCASSET, ME

100 YR FLOOD	+11.0
HTL	+8.5
MHW	5.7
NGVD	0.0
MLLW	-3.8

BCE Bourne Consulting Engineering

IN: WISCASSET
AT: SHEEPSCOT RIVER
COUNTY: COUNTY STATE: STATE
SHEET 5 OF 13 DATE: 3/13/06

File: X:\25536--\25538\Task 05b Final Permit\Final Permit REV 033106\ACOE S-2 TO 5 & 8 Proposed.dwg

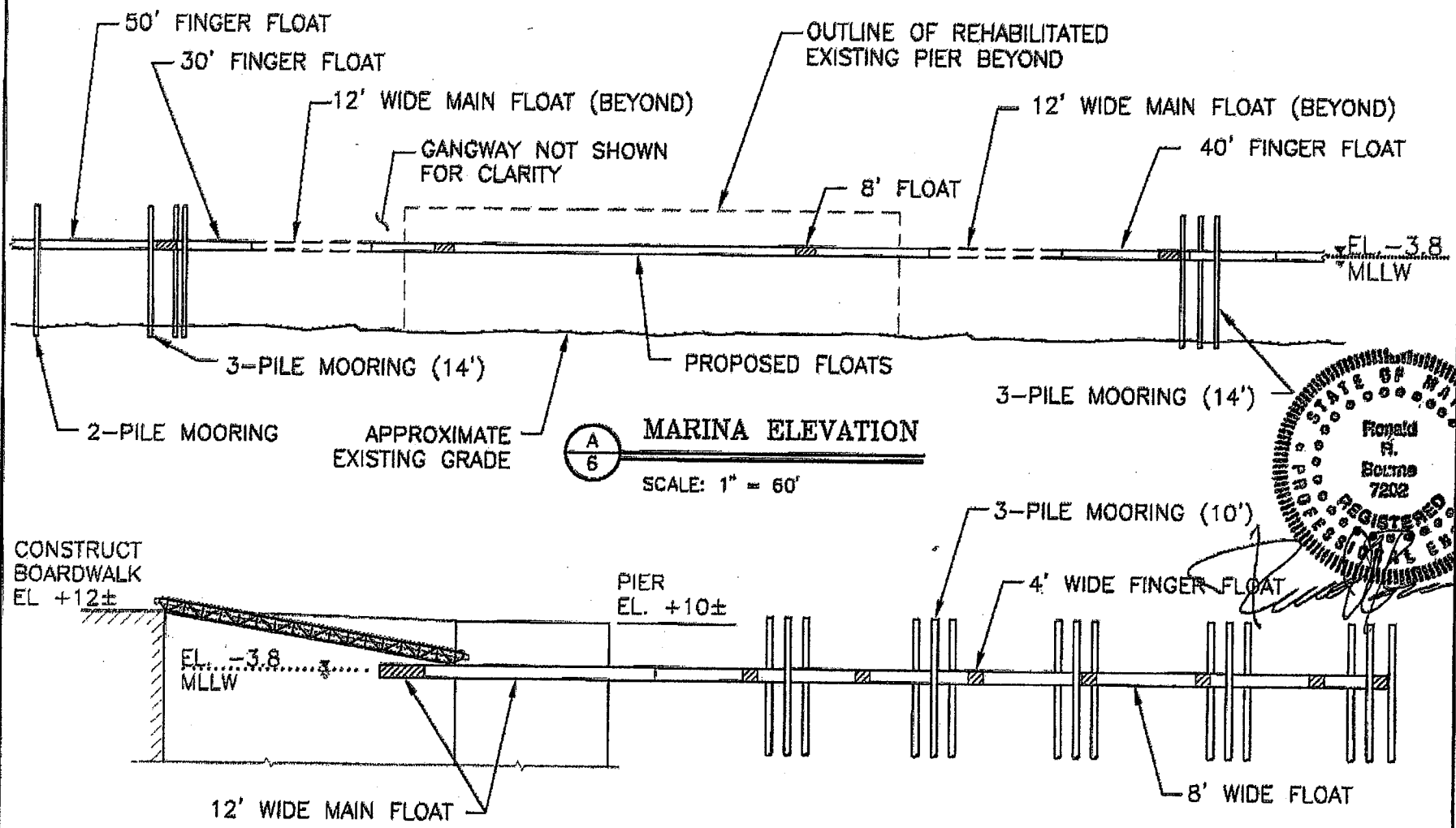

FOR PERMITS ONLY

REVISED 3/31/06 SCALE: 1"=40'-0"

100 YR FLOOD	+11.0	NGVD	0.0
HTL	+6.5	MLLW	-3.8
MHW	+5.7		

TITLE: MARINA SECTIONS

IN: WISCASSET
AT: SHEEPSCOT RIVER
COUNTY: LINCOLN STATE: ME

BCE Bourne Consulting Engineering

PURPOSE: MARINA

APPLICATION BY: POINT EAST
262 BATH RD WISCASSET, ME

SHEET 6 OF 13
DATE: MARCH 13, 2006

File: X:\25536-\25538\TASK 05B FINAL PERMIT\FINAL PERMIT REV 033106\ACOE S-6 MARINA SECTIONS.DWG

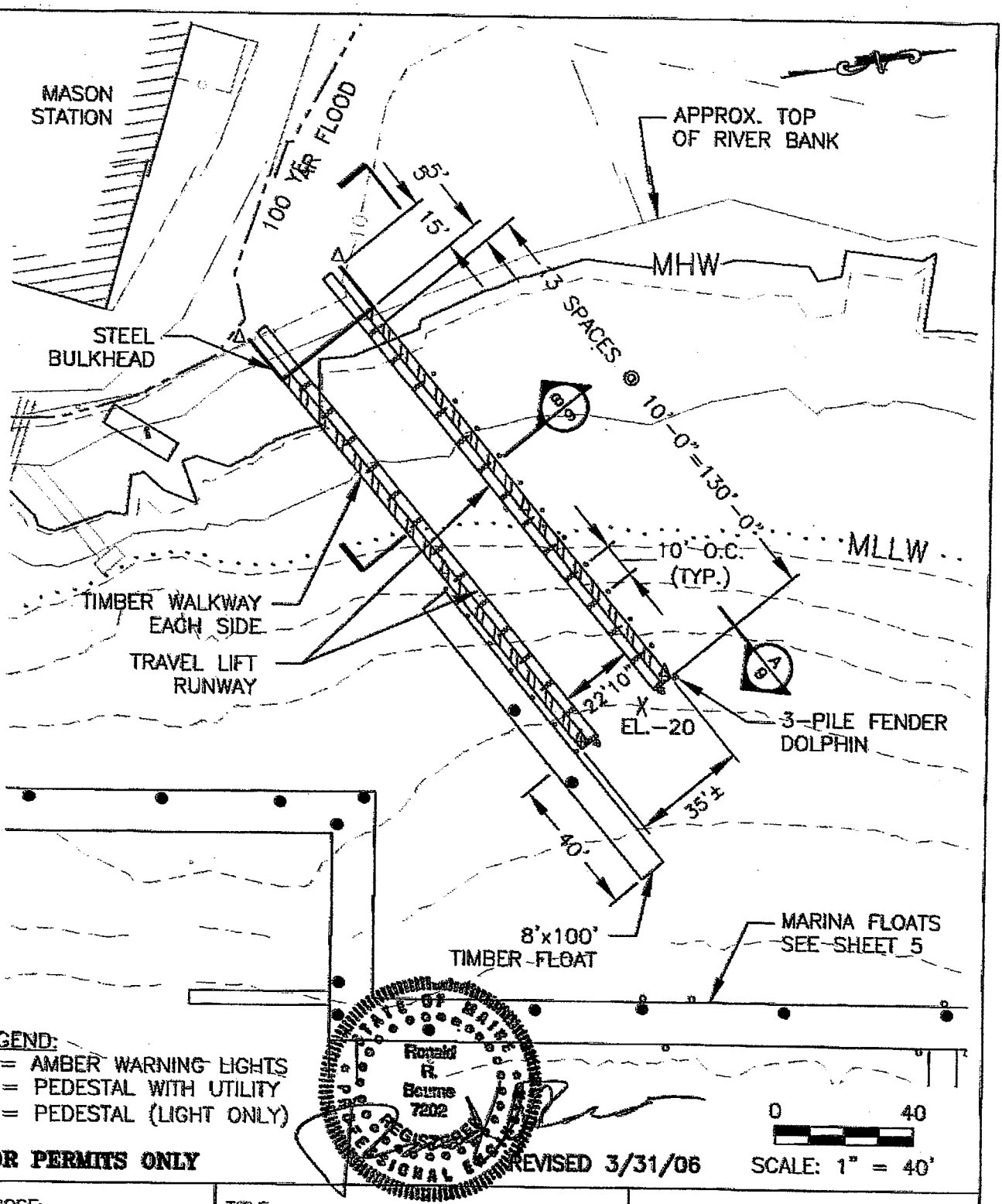

PURPOSE: MARINA	TITLE: VESSEL HAUL-OUT FACILITY PLAN	APPLICATION BY: POINT EAST 262 BATH RD WISCASSET, ME
100 YR FLOOD +11.0 HTL +8.5 MHW 5.7 NGVD 0.0 MLLW -3.8	BCE Bourne Consulting Engineering	IN: WISCASSET AT: SHEEPSCOT RIVER COUNTY: COUNTY STATE: STATE SHEET 8 OF 13 DATE: 3/13/06

File: X:\25536-\25538\Task 05b Final Permit\Final Permit REV 033106\ACOE S-2 TO 5 & 8 Proposed.dwg

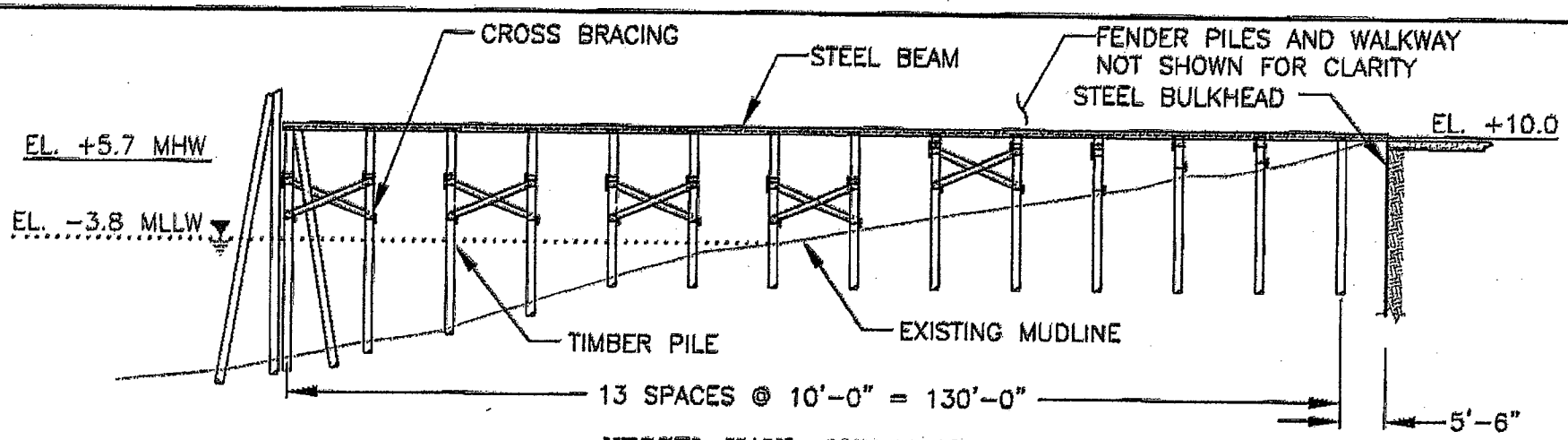

A/9 VESSEL HAUL-OUT FACILITY - ELEVATION

SCALE: 1" = 20'

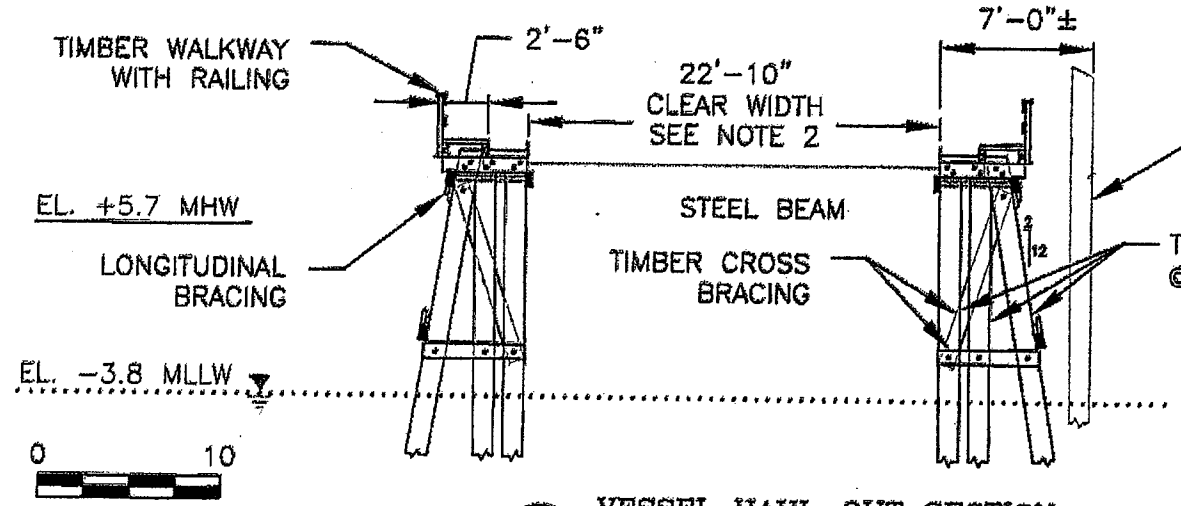

0 10

SCALE: 1" = 10'-0"

B/9 VESSEL HAUL-OUT SECTION

SCALE: 1" = 10'-0"

NOTES:

1. VESSEL HAUL-OUT FACILITY DESIGNED FOR 75 TON TRAVEL LIFT.
2. ACTUAL CLEAR WIDTH TO BE DETERMINED BY THE TRAVEL LIFT PURCHASED.

STATE OF MAINE Ronald H. Bourne 7202 REGISTERED PROFESSIONAL ENGINEER

FOR PERMITS ONLY

REVISED 3/31/06

100 YR FLOOD	+11.0	NGVD	0.0
HTL	+8.5	MLLW	-3.8
MHW	+5.7		

TITLE: VESSEL HAUL-OUT FACILITY ELEVATION AND SECTION

IN: WISCASSET
AT: SHEEPSCOT RIVER
COUNTY: LINCOLN STATE: ME

BCE Bourne Consulting Engineering

PURPOSE: MARINA

APPLICATION BY: POINT EAST 262 BATH RD WISCASSET, ME

SHEET 9 OF 13

DATE: MARCH 13, 2006

File: X:\25536-\25538\TASK 05B FINAL PERMIT\FINAL PERMIT REV 033106\ACOE S-7, 9.DWG

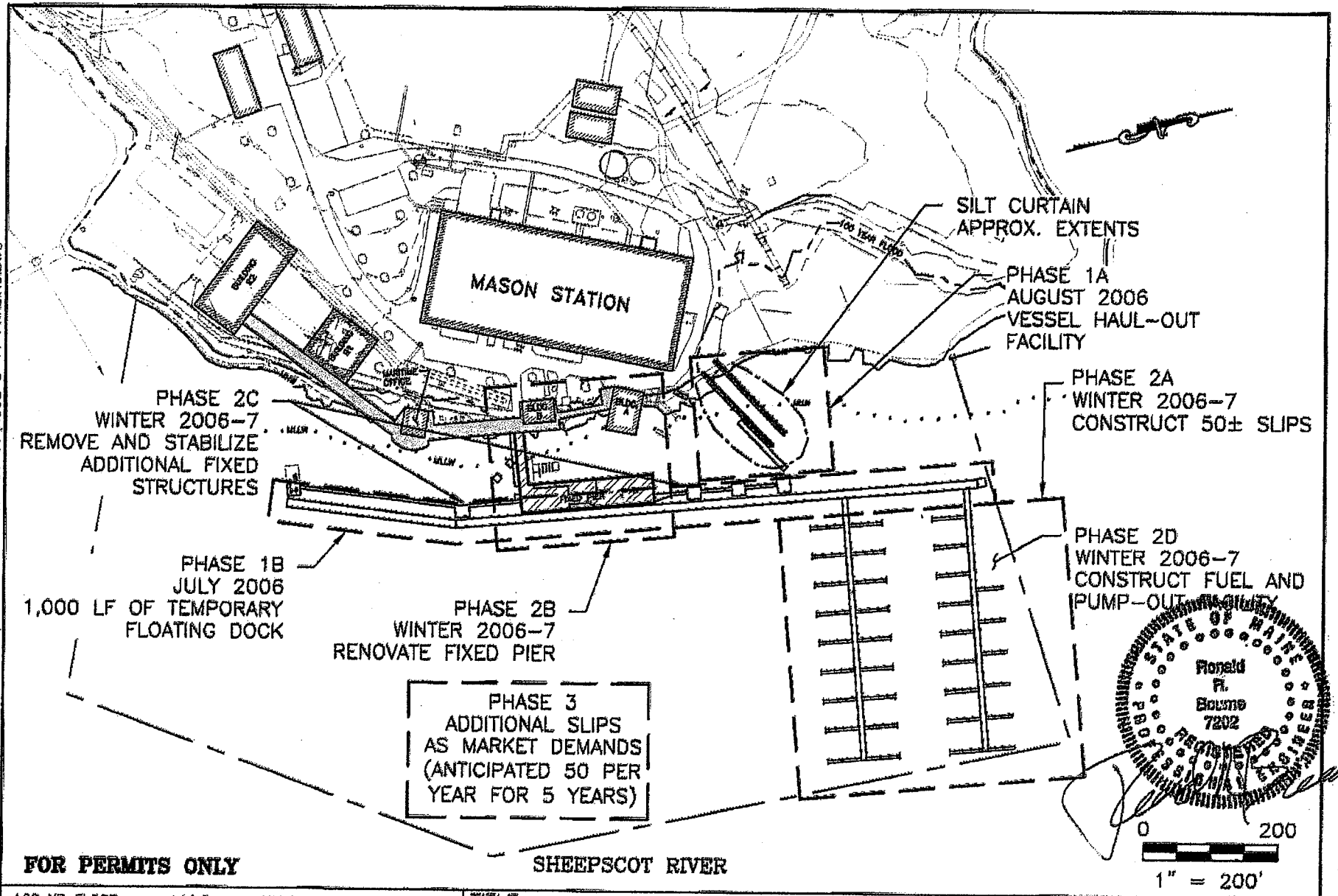

FOR PERMITS ONLY

100 YR FLOOD	+11.0	NGVD	0.0
HTL	+8.5	MLLW	-3.8
MHW	+5.7		

TITLE: PHASING PLAN
MASON STATION

IN: WISCASSET
AT: SHEEPSCOT RIVER
COUNTY: LINCOLN STATE: ME

BCE Bourne Consulting Engineering

PURPOSE: MARINA

APPLICATION BY: POINT EAST
262 BATH RD WISCASSET, ME

SHEET 11a OF 13
DATE: MARCH 31, 2006

File: X:\25536-\25538\TASK 05B FINAL PERMIT\FINAL PERMIT REV 033106\ACOE S-11 PHASING.DWG

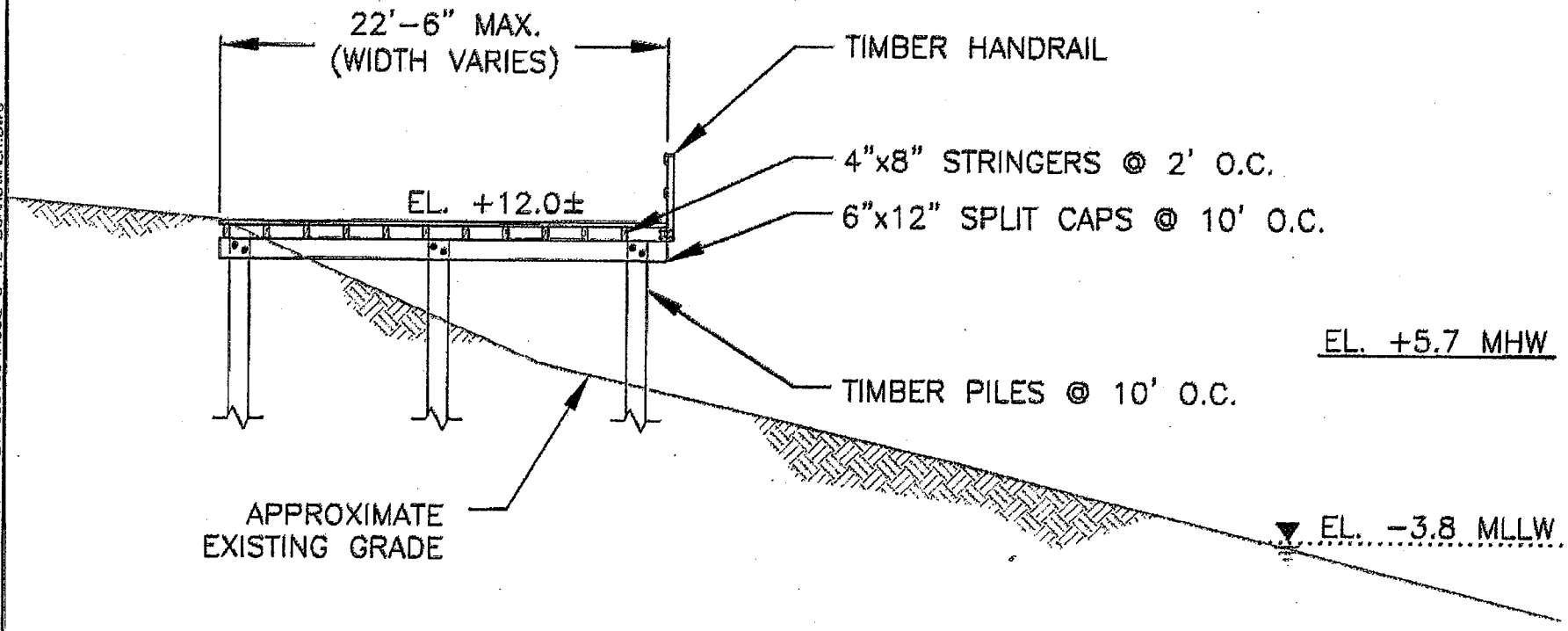

A/12 BOARDWALK - TYPICAL SECTION

SCALE: 1/8" = 1'-0"

STATE OF MAINE
Ronald R. Bourne
7202
REGISTERED PROFESSIONAL ENGINEER

FOR PERMITS ONLY

100 YR FLOOD	+11.0	NGVD	0.0
HTL	+8.5	MLLW	-3.8
MHW	+5.7		

TITLE: BOARDWALK TYPICAL CROSS-SECTION

IN: WISCASSET
AT: SHEEPSCOT RIVER
COUNTY: LINCOLN STATE: ME

BCE Bourne Consulting Engineering

PURPOSE: MARINA

APPLICATION BY: POINT EAST
262 BATH RD WISCASSET, ME

SHEET 12 OF 13
DATE: MARCH 31, 2006

File: X:\25536-\25538\TASK 05B FINAL PERMIT\FINAL PERMIT REV 033106\ACOE S-12 BOARDWALK.DWG