PUBLIC NOTICE

US Army Corps
of Engineers®
New England District

696 Virginia Road
Concord, MA 01742-2751

Date: January 22, 2008
Comment Period Ends: February 21, 2008
File Number: NAE-2004-338
In Reply Refer To: Karen Adams or Kevin Kotelly
Or by e-mail: wind.energy@usace.army.mil

The District Engineer has received a **REVISED** permit application from Cape Wind Associates, LLC to conduct work in waters of the United States as described below. A Public Notice and Draft Environmental Impact Statement (EIS) were issued by the Corps of Engineers in 2004. Since that time, Department of Interior, Minerals Management Service (MMS), has become the lead federal agency and has recently issued a new Draft EIS (see **http://www.mms.gov/offshore/RenewableEnergy/CapeWind.htm**). The applicant has provided a revised application to show the minor revisions to the proposed project. The Corps is soliciting comments on the project revisions.

Comments and inquiries specific to the MMS Draft EIS should be submitted directly to MMS.

APPLICANT: Cape Wind Associates, LLC

ACTIVITY
The project includes the installation of 130 wind turbine generators, an electric service platform and associated submarine cables. A more detailed description and plans of the activity are attached.

WATERWAY AND LOCATION OF THE PROPOSED WORK
This work is proposed in Nantucket Sound with cable landfall at New Hampshire Avenue, Yarmouth, MA. The proposed location is on NOAA Chart #13237 at Latitude 41-30-31.91088 and Longitude 70-19-54.73761

AUTHORITY
Permits are required pursuant to:
_x___Section 10 of the Rivers and Harbors Act of 1899
_x__ Section 404 of the Clean Water Act
_____Section 103 of the Marine Protection, Research and Sanctuaries Act.

The decision whether to issue a permit will be based on an evaluation of the probable impact of the proposed activity on the public interest. That decision will reflect the national concern for both protection and utilization of important resources. The benefit which may reasonably accrue from the proposal must be balanced against its reasonably foreseeable detriments. All factors which may be relevant to the proposal will be considered, including the cumulative effects thereof; among those are: conservation, economics, aesthetics, general environmental concerns, wetlands, cultural value, fish and wildlife values, flood hazards, flood plain value, land use, navigation, shoreline erosion and accretion, recreation, water supply and conservation, water quality, energy needs, safety, food production and, in general, the needs and welfare of the people.

The Corps of Engineers is soliciting comments from the public; Federal, state, and local agencies and officials; Indian Tribes; and other interested parties in order to consider and evaluate the impacts of this proposed activity. Any comments received will be considered by the Corps of Engineers to determine whether to issue, modify, condition or deny a permit for this proposal. To make this decision, comments are used to assess impacts on endangered species, historic properties, water quality, general environmental effects, and the other public interest factors listed above. Comments are used in the preparation of an Environmental Assessment and/or an Environmental Impact Statement pursuant to the National Environmental Policy Act.

Where the activity involves the discharge of dredged or fill material into waters of the United States or the transportation of dredged material for the purpose of disposing it in ocean waters, the evaluation of the impact of the activity in the public interest will also include application of the guidelines promulgated by the Administrator, U.S Environmental Protection Agency, under authority of Section 404(b) of the Clean Water Act, and/or Section 103 of the Marine Protection Research and Sanctuaries Act of 1972 as amended.

In order to properly evaluate the proposal, we are seeking public comment. Anyone wishing to comment is encouraged to do so. **Comments should be submitted in writing by the above date.** If you have any questions, please contact Karen Adams or Kevin Kotelly at (978) 318-8338, (800) 343-4789 or (800) 362-4367, if calling from within Massachusetts.

The Corps of Engineers previously held public hearings to obtain public comment on this project in December 2004. Corps of Engineers representatives will also attend and listen to comments presented at the MMS hearings in March 2008 (see **http://www.mms.gov/offshore/RenewableEnergy/CapeWind.htm** for details on dates and locations).

The initial determinations made herein will be reviewed in light of facts submitted in response to this notice. All comments will be considered a matter of public record. Copies of letters of objection will be forwarded to the applicant who will normally be requested to contact objectors directly in an effort to reach an understanding.

For more information on the New England District Corps of Engineers programs, visit our website at http://www.nae.usace.army.mil.

THIS NOTICE IS NOT AN AUTHORIZATION TO DO ANY WORK.

Robert J. DeSista
Chief, Regulatory Division

If you would prefer not to continue receiving Public Notices, please contact Ms. Tina Chaisson at (978) 318-8058 or e-mail her at bettina.m.chaisson@usace.army.mil. You may also check here ( ) and return this portion of the Public Notice to: Bettina Chaisson, Regulatory Division, U.S. Army Corps of Engineers, 696 Virginia Road, Concord, MA 01742-2751.

NAME: _____
ADDRESS: _____

PROPOSED WORK AND PURPOSE

The project includes work in navigable waters including the discharge of dredged or fill material for a proposed Wind Park consisting of 130 Wind Turbine Generators located on Horseshoe Shoal in Nantucket Sound between Cape Cod, Martha's Vineyard and Nantucket. The work is described on the enclosed plans entitled "Purpose: Wind Energy Generation and Submarine/Overland Transmission Cable Project," on 18 sheets, and dated "February 15, 2007."

The electricity produced by each turbine will be transmitted via a 33 kilovolt submarine transmission cable system to the Electric Service Platform centrally located within the turbine array. The electricity will then be transmitted to the mainland via two 115 kilovolt alternating current submarine cable circuits, making landfall at New Hampshire Avenue, Yarmouth, MA.

Several changes to the project proposal have occurred since the original permit application and the previous Public Notice. The configuration and location of the turbines has changed slightly and the construction method for landfall transition has been modified to include a temporary cofferdam. In 2004, the state territorial boundary expanded further seaward in this area of Nantucket Sound. Ten of the original turbine locations were within these newly designated state waters. The proposed locations for twenty other turbines have changed to avoid archeologically sensitive areas, potential impacts to commercial fisherman, and to reduce the potential for impacts to commercial marine navigation. See Sheet 3 for the revised locations. Rock armouring is now proposed as an alternative to the scour mats at the base of the turbine monopole foundations, if needed. The lighting plan has been developed consistent with the Federal Aviation Administration guidance that was issued in November 2005. The landfall transition of the 115 kilovolt submarine transmission lines from water to land at Yarmouth will be through the use of horizontal directional drilling (HDD) to avoid disturbance of the shoreline. A temporary cofferdam will be installed at the seaward end of the HDD borehole. The steel sheetpile cofferdam will enclose an area of approximately 2925 square feet with dimensions of 65 feet wide and 45 feet long. It will be open at one end to allow the installation of the conduits. A temporary turbidity curtain may be used may be used to confine sediments within the work area, if needed. Approximately 840 cubic yards of sediment will be temporarily removed, stored on a barge, and backfilled after the installation is completed. Clean sand will be used to supplement the backfill material as needed to restore the seafloor to preconstruction grade. See sheets 12-14.

DATE: Jan 11, 2008 – 11:55AM
FILENAME: H:\E159\ACOE 2008\E159-ACOE-08_Fig-01.dwg

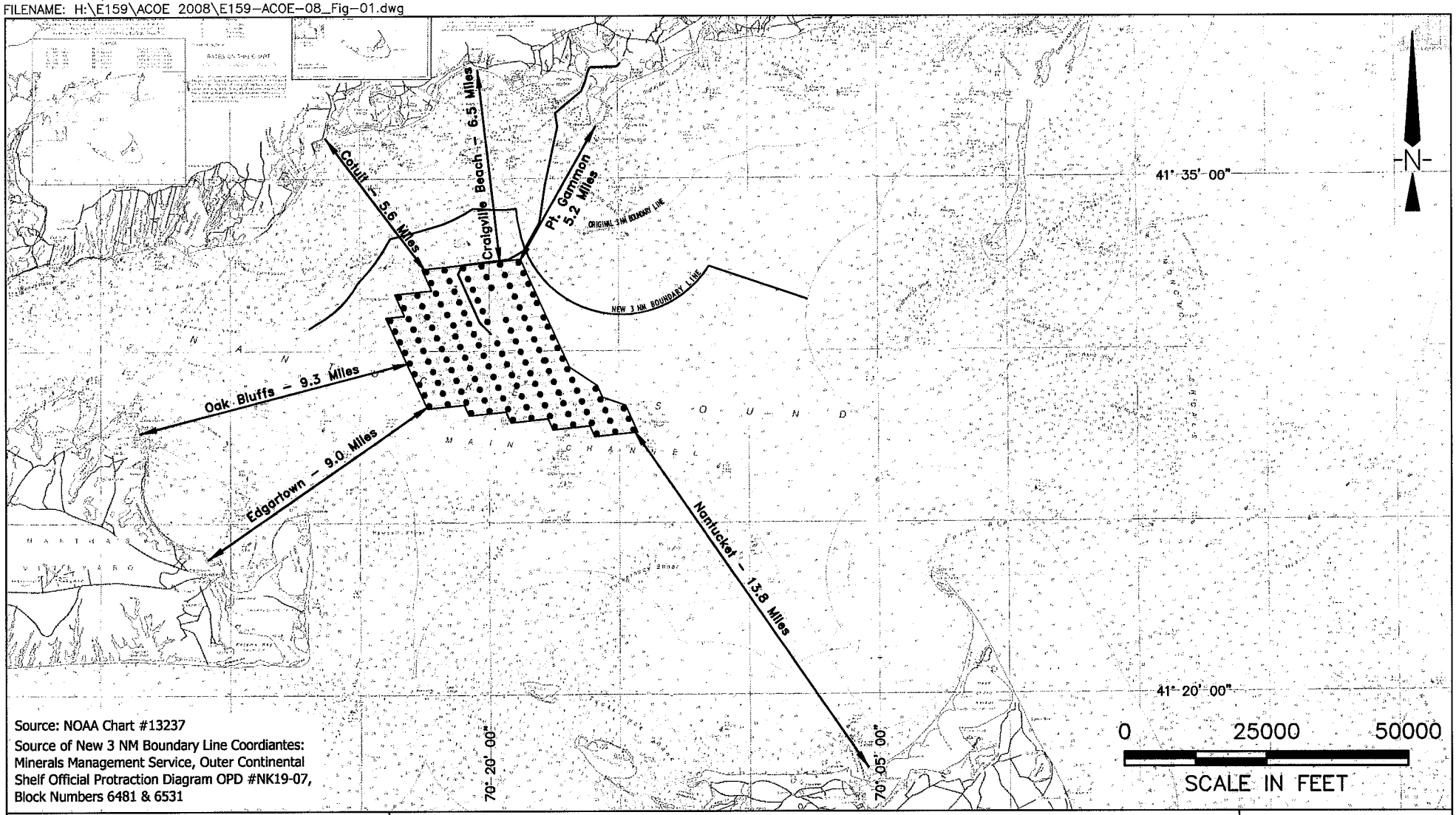

Source: NOAA Chart #13237
Source of New 3 NM Boundary Line Coordiantes: Minerals Management Service, Outer Continental Shelf Official Protraction Diagram OPD #NK19-07, Block Numbers 6481 & 6531

Purpose: Wind Energy Generation and Submarine/ Overland Transmission Cable Project	**Proposed Turbine Array** **Nantucket Sound & Approaches - New 3 Mile Boundary** **Cape Wind Project**	**SHEET NO.** **1 of 18**
		DATE: **February 15, 2007**
Cape Wind™ Energy for Life.	At: Yarmouth, Barnstable County, Massachusetts In: Nantucket Sound Applicant: Cape Wind Associates, LLC	**PROJECT NO.** **E159-504**

ESS Group Inc.

DATE: Jan 11, 2008 – 11:56AM
FILENAME: H:\E159\ACOE 2008\E159–ACOE–08_Fig–02.dwg

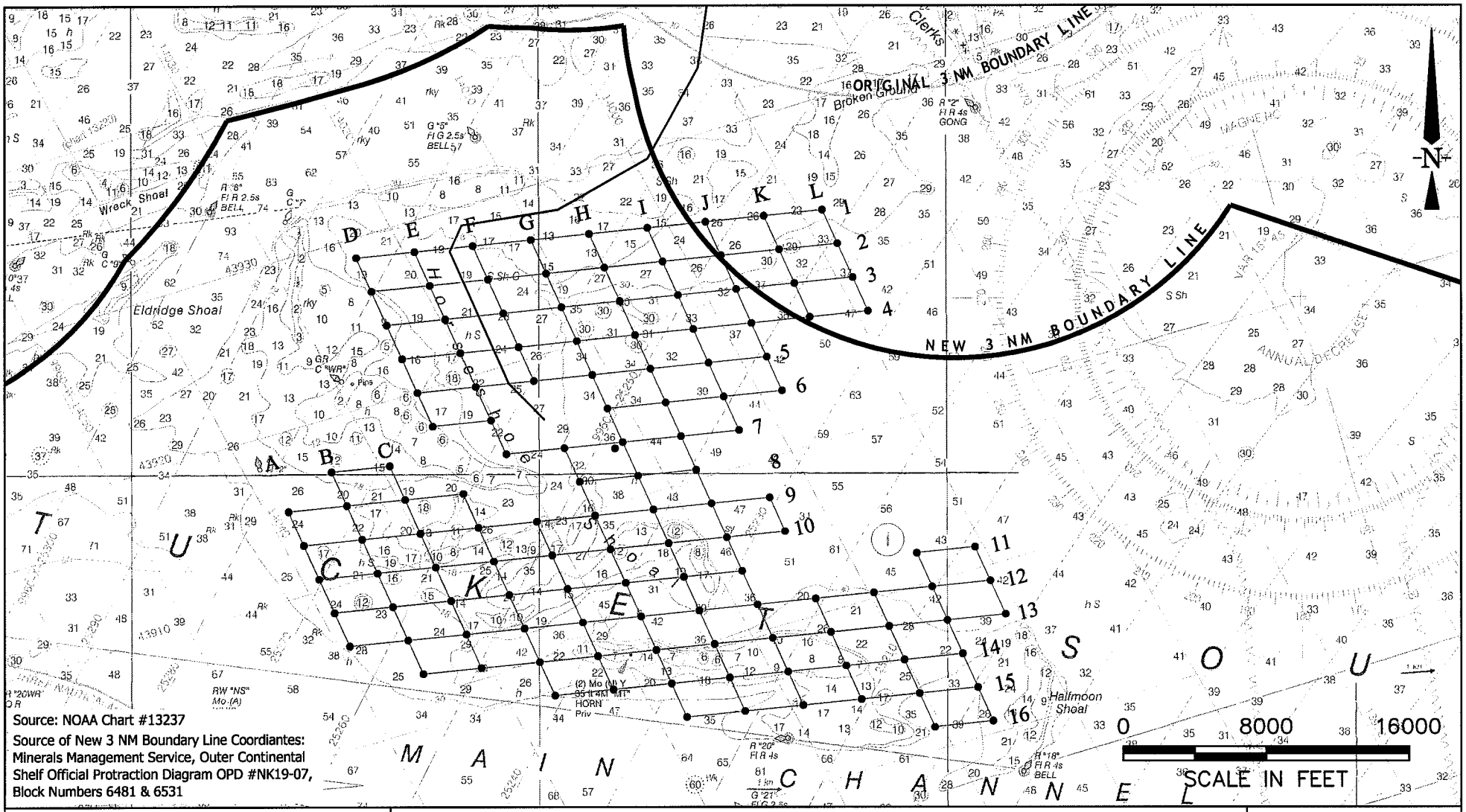

Source: NOAA Chart #13237

Source of New 3 NM Boundary Line Coordiantes: Minerals Management Service, Outer Continental Shelf Official Protraction Diagram OPD #NK19-07, Block Numbers 6481 & 6531

Purpose: Wind Energy Generation and Submarine/ Overland Transmission Cable Project	**Preliminary Turbine Array** **Nantucket Sound & Approaches - New 3 Mile Boundary** **Cape Wind Project**	**SHEET NO.** **2 of 18**
		DATE: **February 15, 2007**
Cape Wind™ Energy for Life.	At: Yarmouth, Barnstable County, Massachusetts In: Nantucket Sound Applicant: Cape Wind Associates, LLC	**PROJECT NO.** **E159-504**

ESS Group Inc.

DATE: Jan 11, 2008 – 11:59AM
FILENAME: H:\E159\ACOE 2008\E159-ACOE-08_Fig-03.dwg

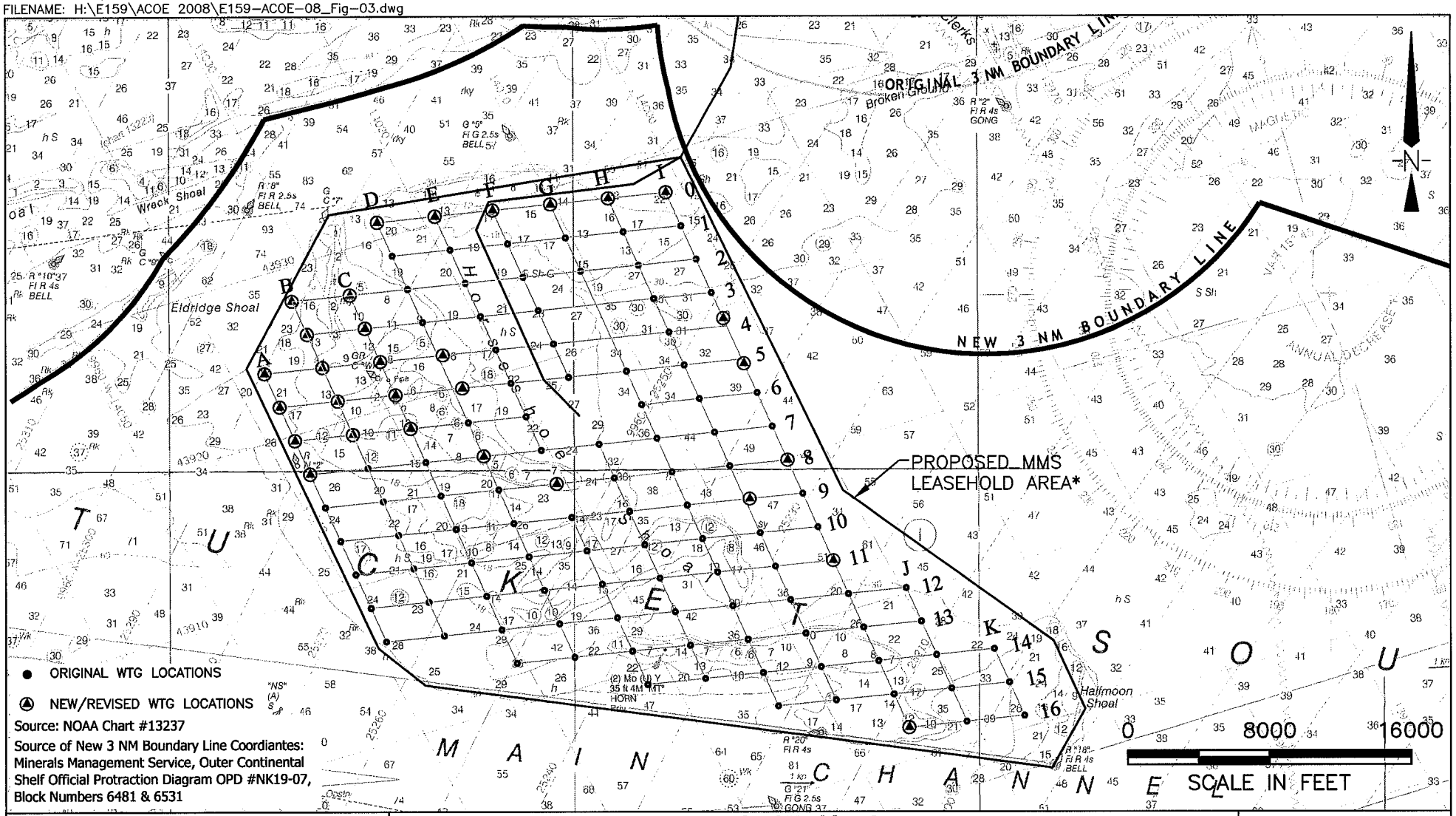

Source: NOAA Chart #13237

Source of New 3 NM Boundary Line Coordiantes: Minerals Management Service, Outer Continental Shelf Official Protraction Diagram OPD #NK19-07, Block Numbers 6481 & 6531

Purpose: Wind Energy Generation and Submarine/ Overland Transmission Cable Project	**Revised Turbine Array** **Nantucket Sound & Approaches - New 3 Mile Boundary** **Cape Wind Project**	**SHEET NO.** **3 of 18**
		DATE: **February 15, 2007**
Cape Wind™ Energy for Life.	At: Yarmouth, Barnstable County, Massachusetts In: Nantucket Sound Applicant: Cape Wind Associates, LLC	**PROJECT NO.** **E159-504**

ESS Group Inc.

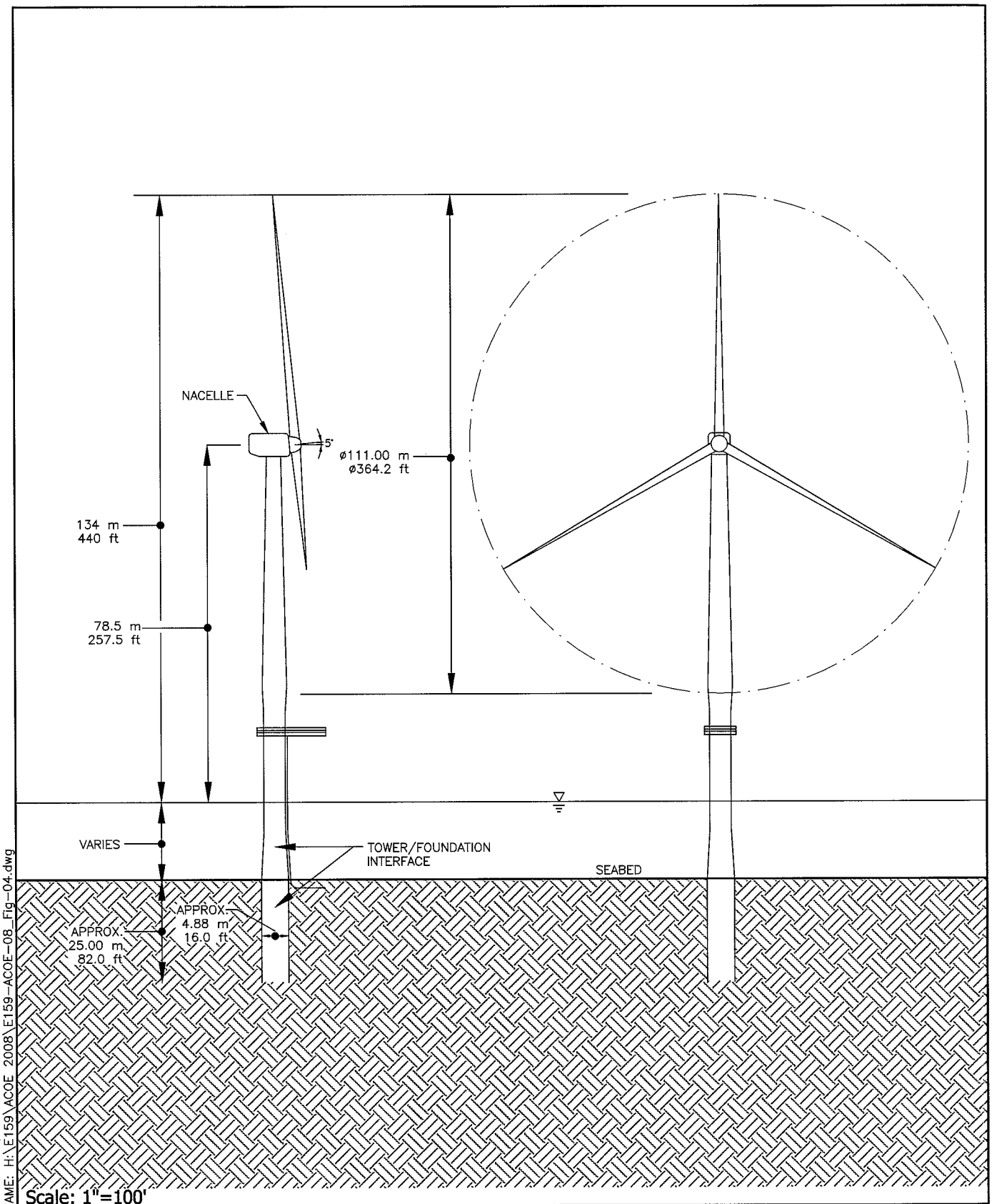

DATE: Jan 11, 2008 – 11:59AM
FILENAME: H:\E159\ACOE 2008\E159-ACOE-08_Fig-04.dwg

Purpose: Wind Energy Generation and Submarine/ Overland Transmission Cable Project	**Proposed Wind Turbine Generator Profile Detail** **Cape Wind Project**	**SHEET NO. 4 of 18** **DATE: 02/15/07**
Cape Wind™ Energy for Life.	At: Yarmouth, Barnstable County, Massachusetts In: Nantucket Sound Applicant: Cape Wind Associates, LLC	**PROJECT NO. E159-504**

ESS Group Inc.

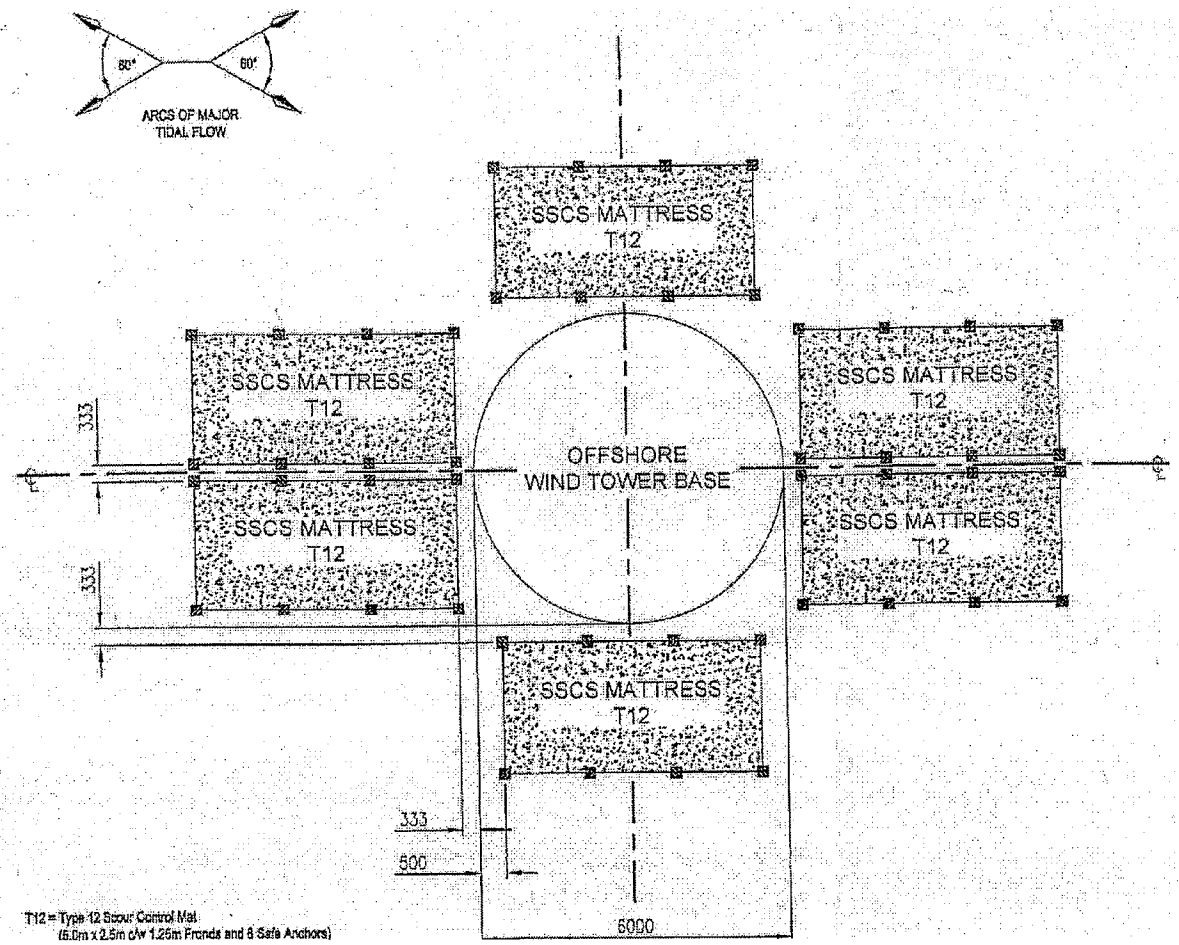

NOTES: - OFFSHORE WIND ENERGY TOWER

1. MATS for SCOUR PROTECTION as indicated on this DRAWING to be by SEABED SCOUR CONTROL SYSTEMS Ltd.

SAMPLE REQUIREMENT per Wind Tower:
6 No. SSCS Type 12 SCOUR CONTROL MATS 5.0m x 2.5m, BUOYANT FROND HEIGHT 1.25m, with 8 in No. Safe Anchors. Weight in Air: 100kg, Weight Submerged: 45kg. FROND Tensile Strength >581N and up to 1181N. Mat Layout to face into MAXIMUM tidal flow directions.

It is IMPORTANT that these Scour Control Mats be installed a.s.a.p. Tower Installation.

2. MATS to be positioned and anchored by two (2) competent DIVERS. Mats are crane deployed by 2 leg wire rope slings (Slings can be supplied by SSCS). Detailed installation instruction are supplied with the Mats.

3. NOMINAL MINIMUM CLEAR DISTANCE between Tower Base and Scour Control Mats to be >9" (>228mm). Normal/Standard: 12" to 15" (305 to 380mm).

4. INSTALLATION SEQUENCE as required by Dive Team. During installation the SAFE NETS must **NOT** BE REMOVED UNTIL **ALL** ADJACENT MATS HAVE BEEN FULLY INSTALLED to prevent Diver or ROV entanglement.

5. MATS should **NOT** be installed at Entry/ Attachment Points intended for Cables. Such Scour Control Mats can be installed immediately AFTER any subsequent connections to the Tower Base have been completed and BEFORE Winter Storms, and Mats should be continued out to the inner end of any cable trenching.

6. **Additional Stability Post Installation - Frond Induced Sedimentation:** EACH Type 12 Mat, 5m x 2.5m, the submerged sediment bank should be in the range:

→ 10.2 tonnes to 12.4 tonnes submerged weight over each mat; this hold down is **additional** to the retention provided by the eight (8) Safe Anchors and also excludes gently sloping extension of sediment bank down to seabed in a smooth curve up to 2.2m away from mat edge.

Purpose: Wind Energy Generation and Submarine / Overland Transmission Cable Project Source: Seabed Scour Control Systems, LTD Not to scale	**Scour Control Measures** **CAPE WIND ENERGY PROJECT**	**Sheet** **5 of 18**
Cape Wind™ Energy for Life.	At:Yarmouth, Barnstable County, Massachusetts In: Nantucket Sound Applicant:Cape wind Associates, LLC	**Date:** 2/15/2007 PROJECT NO. E159-504

ESS Group, Inc.

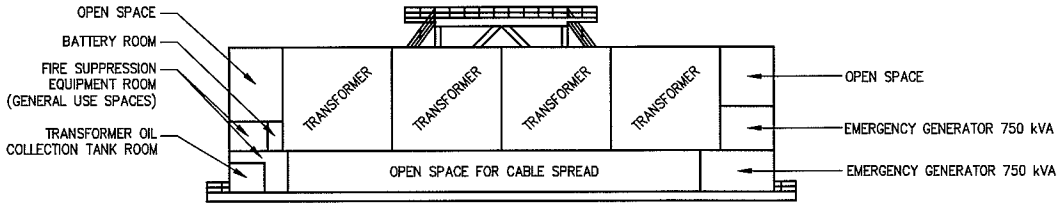

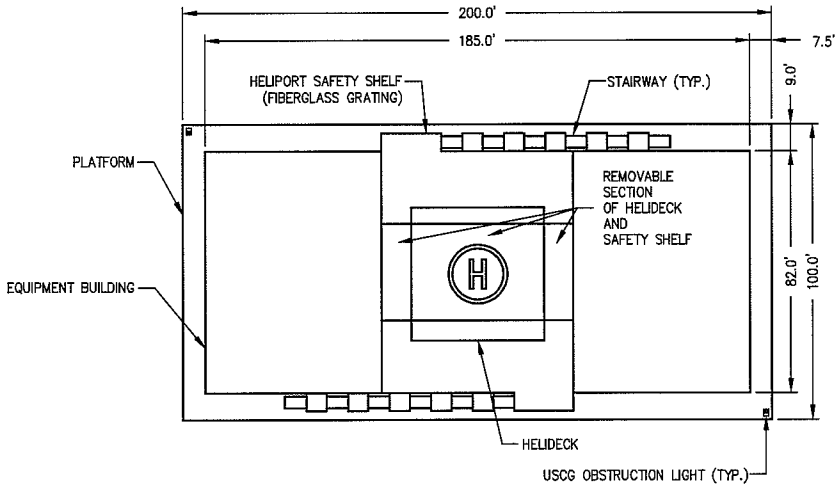

PLAN

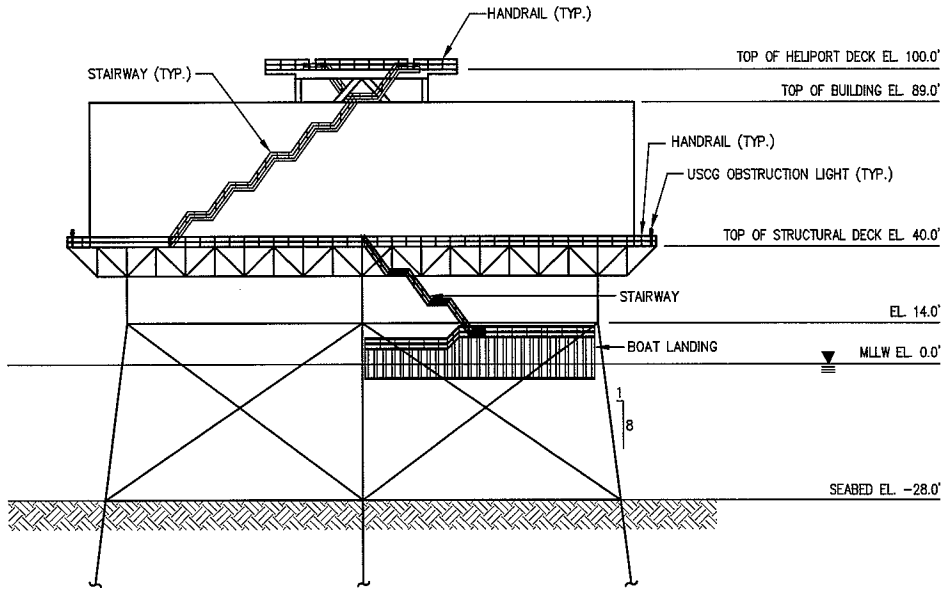

ELEVATION

Scale: (Not to Scale)

Purpose: Wind Energy Generation and Submarine/ Overland Transmission Cable Project	**Proposed Electric Service Platform Elevation and Plan View** **Cape Wind Project**	**SHEET NO. 6 of 18** **DATE: 02/15/07**
Cape Wind™ Energy for Life.	At: Yarmouth, Barnstable County, Massachusetts In: Nantucket Sound Applicant: Cape Wind Associates, LLC	**PROJECT NO. E159-504**

DATE: Jan 11, 2008 – 11:59AM
FILENAME: H:\E159\ACOE 2008\E159-ACOE-08_Fig-06-07.dwg

ESS Group Inc.

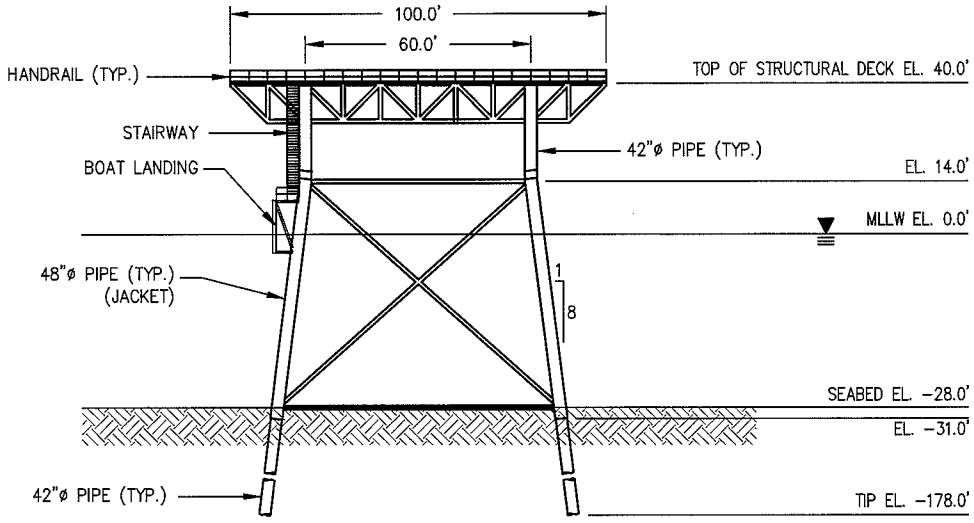

SIDE ELEVATION

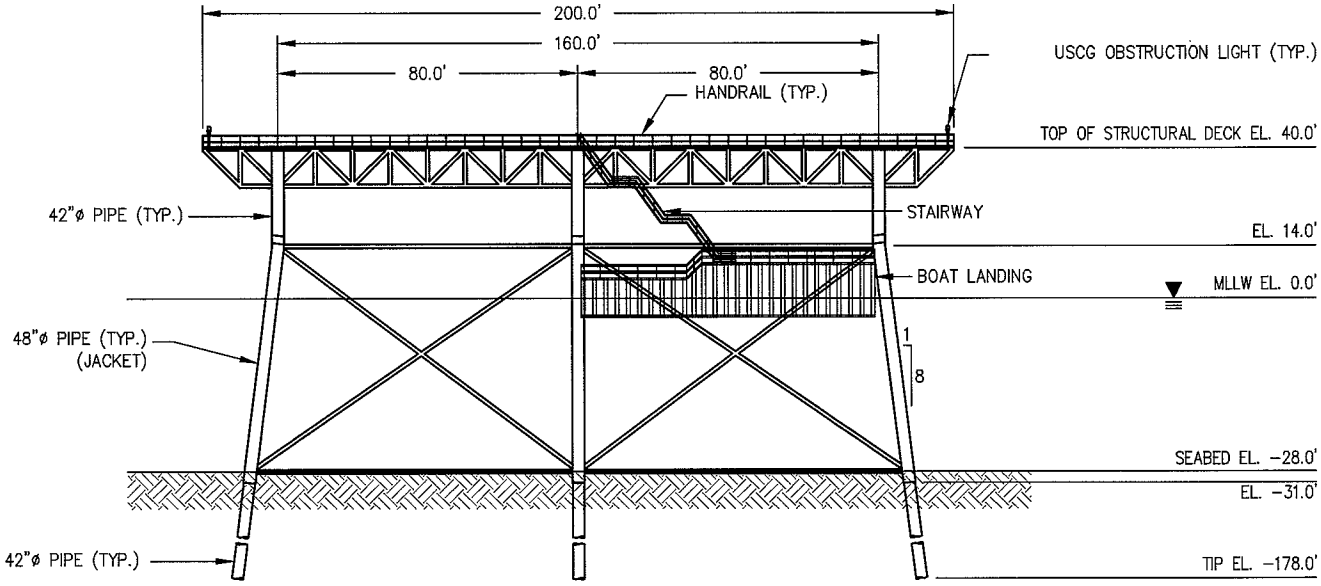

FRONT ELEVATION

Scale: (Not to Scale)

Purpose: Wind Energy Generation and Submarine/ Overland Transmission Cable Project	**Proposed Electric Service Platform Foundation and Structural Detail** **Cape Wind Project**	**SHEET NO. 7 of 18** **DATE: 02/15/07**
Cape Wind™ Energy for Life.	At: Yarmouth, Barnstable County, Massachusetts In: Nantucket Sound Applicant: Cape Wind Associates, LLC	**PROJECT NO. E159-504**

DATE: Jan 11, 2008 – 12:00PM
FILENAME: H:\E159\ACOE 2008\E159-ACOE-08_Fig-06-07.dwg

ESS Group Inc.

DATE: Jan 11, 2008 – 12:11PM
FILENAME: H:\E159\ACOE 2008\E159-ACOE-08_Fig-08.dwg

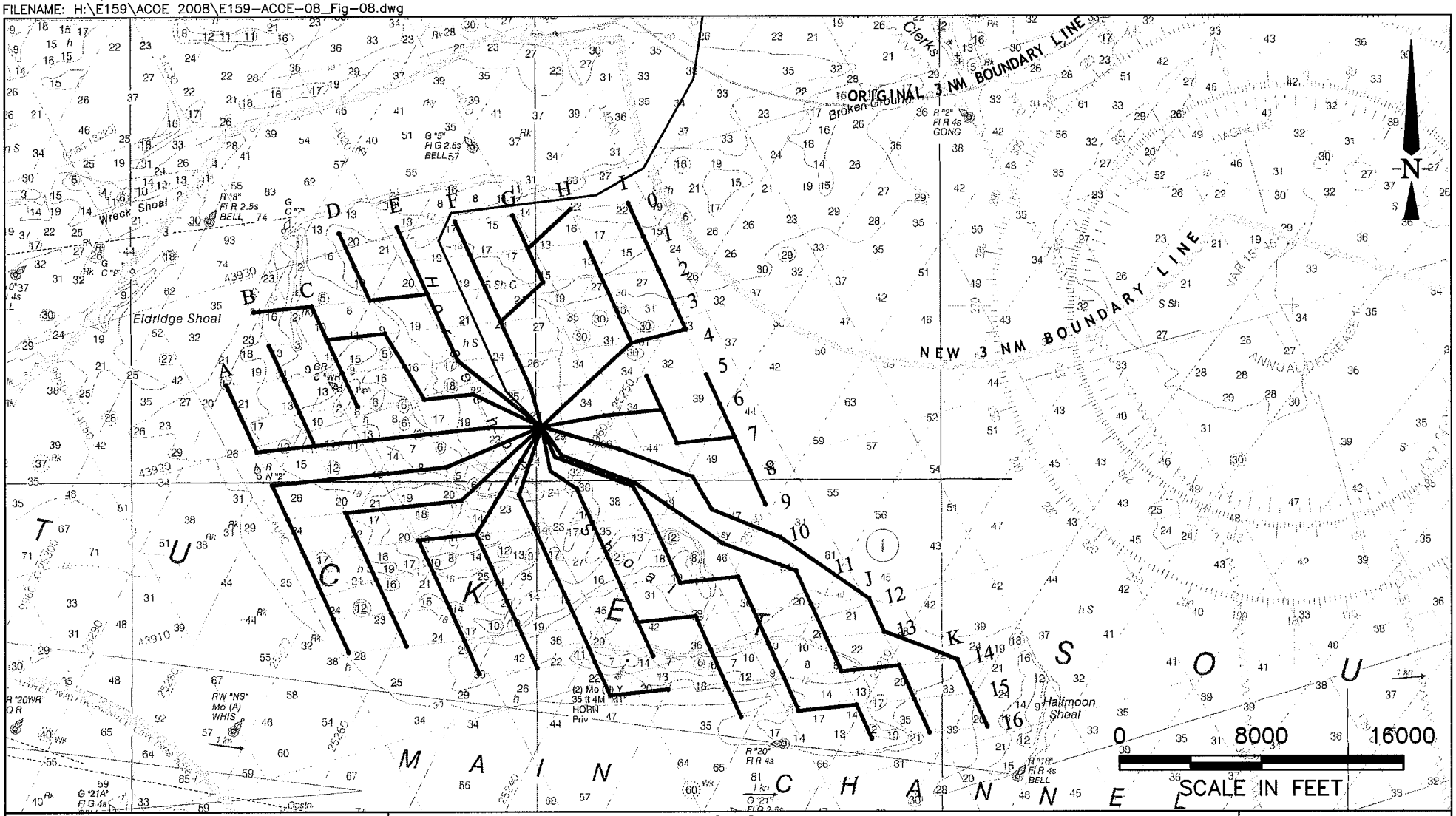

Purpose: Wind Energy Generation and Submarine/ Overland Transmission Cable Project	**Revised Inner-Array Layout** **Nantucket Sound & Approaches - New 3 Mile Boundary** **Cape Wind Project**	**SHEET NO.** **8 of 18**
		DATE: **February 15, 2007**
Cape Wind™ Energy for Life.	At: Yarmouth, Barnstable County, Massachusetts In: Nantucket Sound Applicant: Cape Wind Associates, LLC	**PROJECT NO.** **E159-504**

ESS Group Inc.

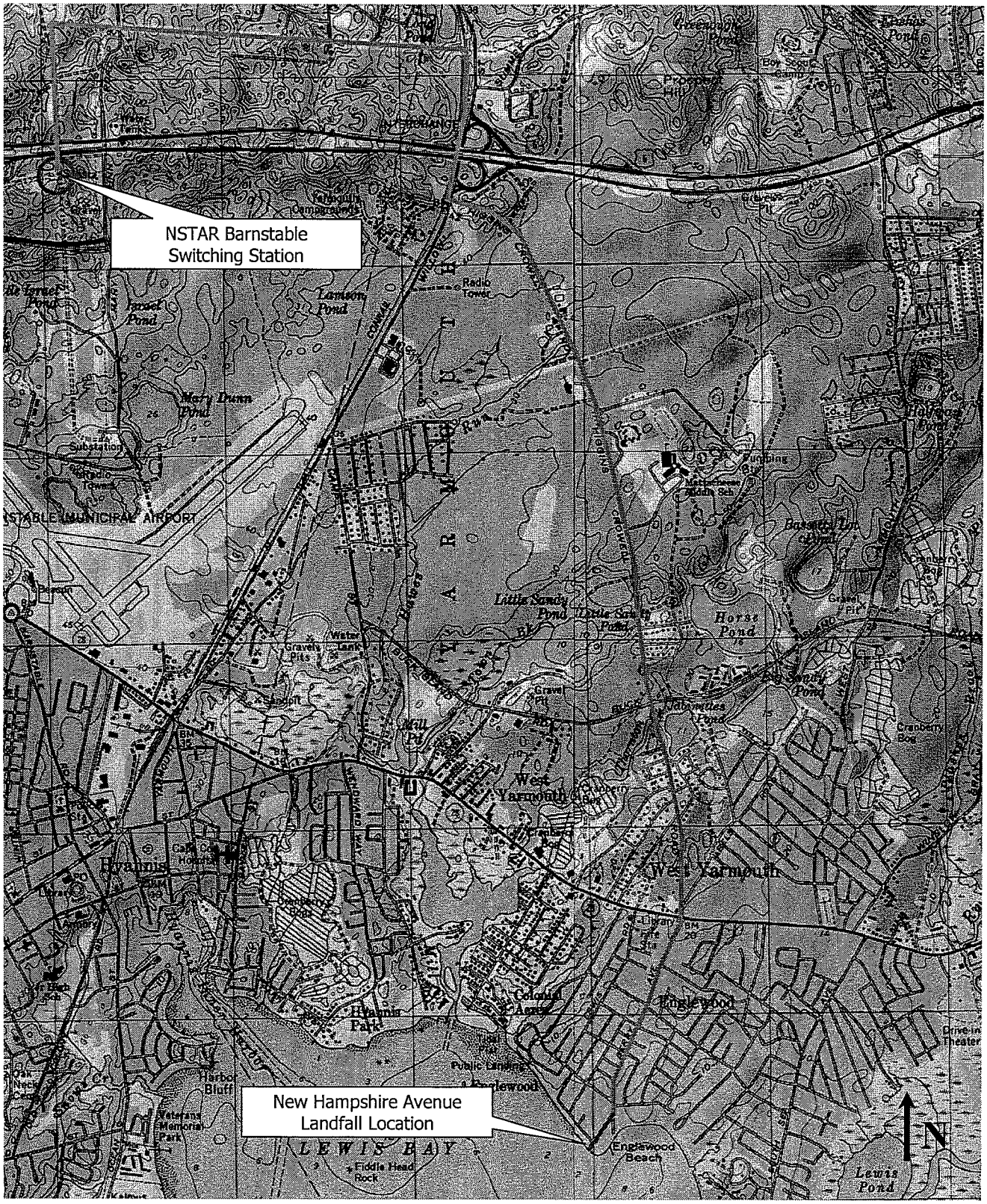

Purpose: Wind Energy Generation and Submarine / Overland Transmission Cable Project Source: USGS Topographic Quad Scale: Approx. ——— = 1000′	**Landfall and Cable Route** **Yarmouth, Massachusetts** **CAPE WIND PROJECT**	**Sheet** **9 of 18**
Cape Wind™ Energy for Life.	At: Yarmouth and Barnstable, Barnstable County, Massachusetts In: Nantucket Sound Applicant: Cape Wind Associates, LLC	**Date:** 2/15/07 PROJECT NO. E159-504

ESS Group, Inc.

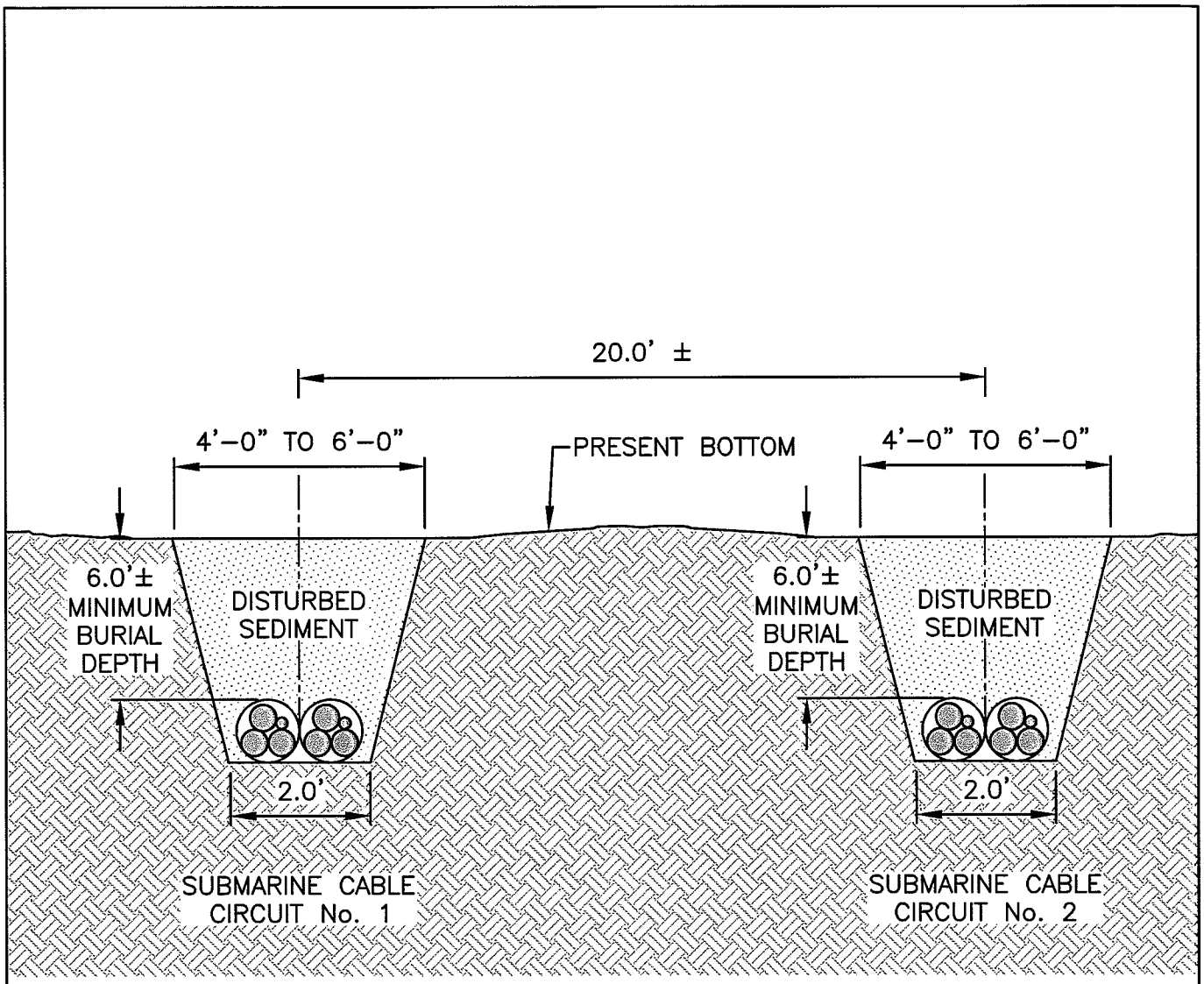

Scale: (Not to Scale)

Purpose: Wind Energy Generation and Submarine/ Overland Transmission Cable Project	**Typical Cross Section of Submarine Cable Trench Using Jet Plow Embedment** **Cape Wind Project**	**SHEET NO. 10 of 18** **DATE: 02/15/07**
Cape Wind™ Energy for Life.	At: Yarmouth, Barnstable County, Massachusetts In: Nantucket Sound Applicant: Cape Wind Associates, LLC	**PROJECT NO. E159-504**

DATE: Jan 11, 2008 – 12:01PM
FILENAME: H:\E159\ACOE 2008\E159-ACOE-08_Fig-10.dwg

ESS Group Inc.

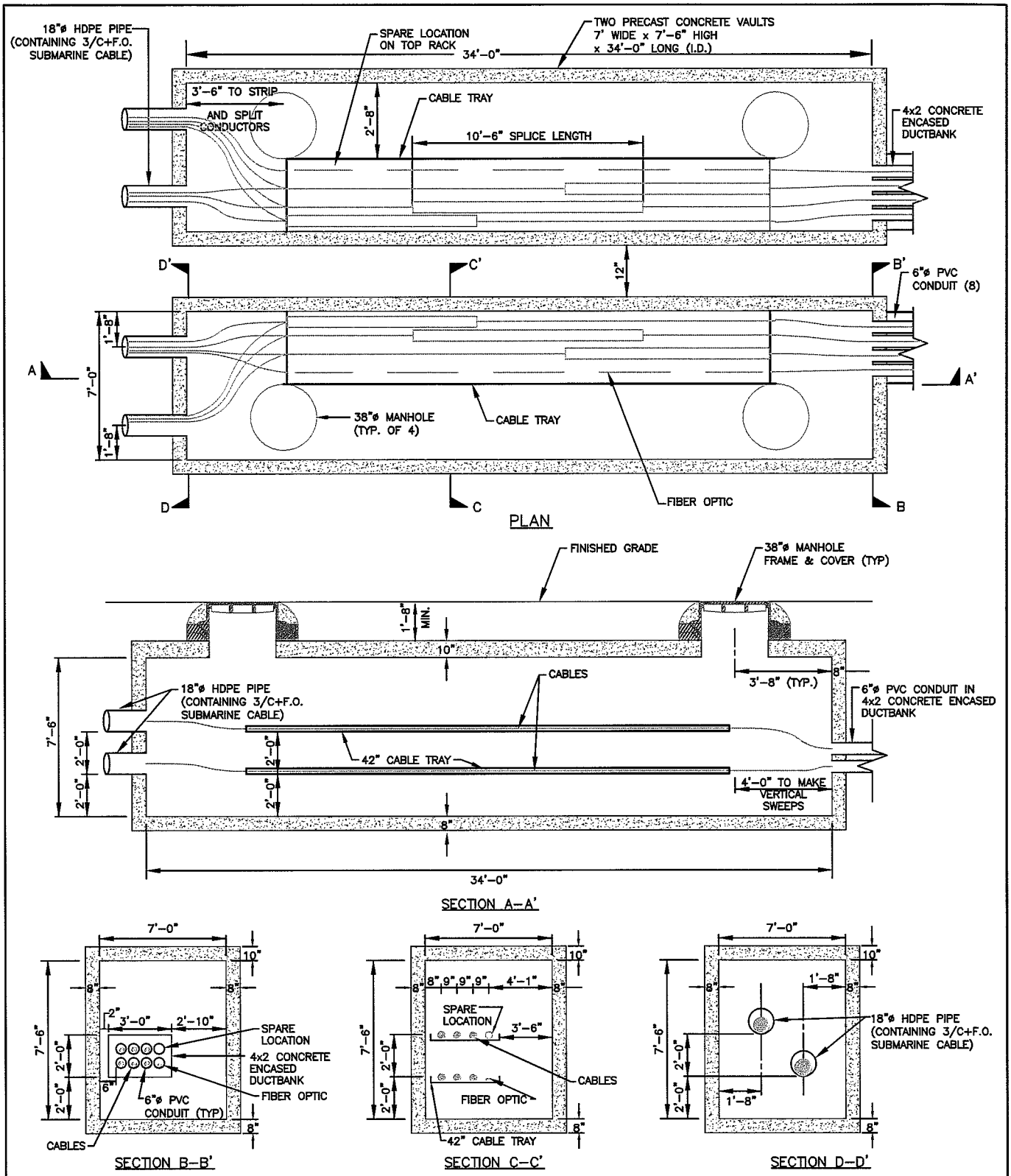

Scale: (Not to Scale)

Purpose: Wind Energy Generation and Submarine/ Overland Transmission Cable Project	**115 kV Landfall Transition Vault** **Cape Wind Project**	**SHEET NO. 11 of 18** **DATE: 02/15/07**
Cape Wind™ Energy for Life.	At: Yarmouth, Barnstable County, Massachusetts In: Nantucket Sound Applicant: Cape Wind Associates, LLC	**PROJECT NO. E159-504**

DATE: Jan 11, 2008 – 12:01PM
FILENAME: H:\E159\ACOE 2008\E159-ACOE-08_Fig-11.dwg

ESS Group Inc.

DATE: Jan 11, 2008 – 12:02PM
FILENAME: H:\E159\ACOE 2008\E159-ACOE-08_Fig-12-13-14.dwg

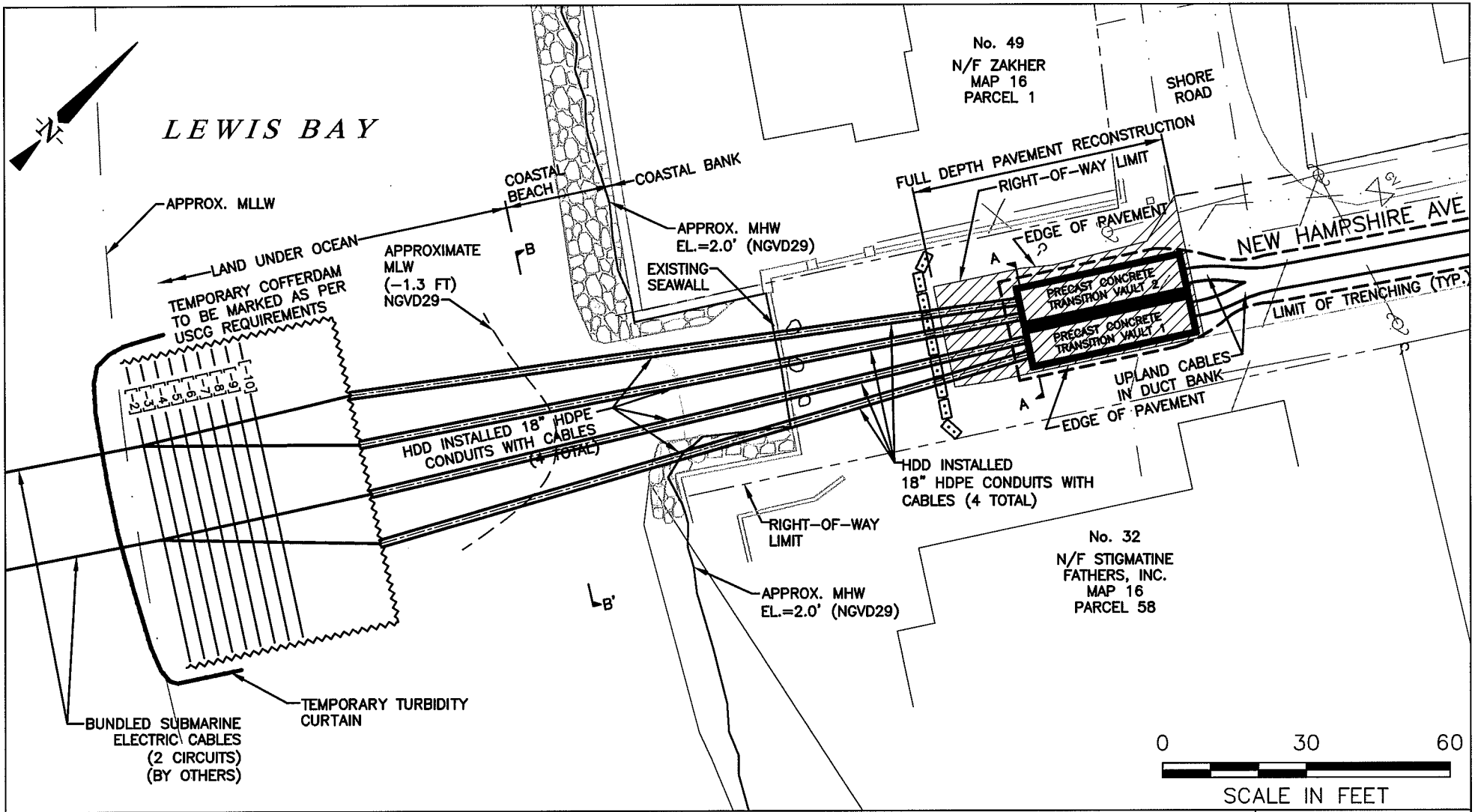

Purpose: Wind Energy Generation and Submarine/ Overland Transmission Cable Project	**Plan View of Landfall Transition Location** **Cape Wind Project**	**SHEET NO. 12 of 18**
Cape Wind™ Energy for Life.	At: Yarmouth, Barnstable County, Massachusetts In: Nantucket Sound Applicant: Cape Wind Associates, LLC	**DATE: February 15, 2007** **PROJECT NO. E159-504**

ESS Group Inc.

DATE: Jan 11, 2008 – 12:02PM
FILENAME: H:\E159\ACOE 2008\E159-ACOE-08_Fig-12-13-14.dwg

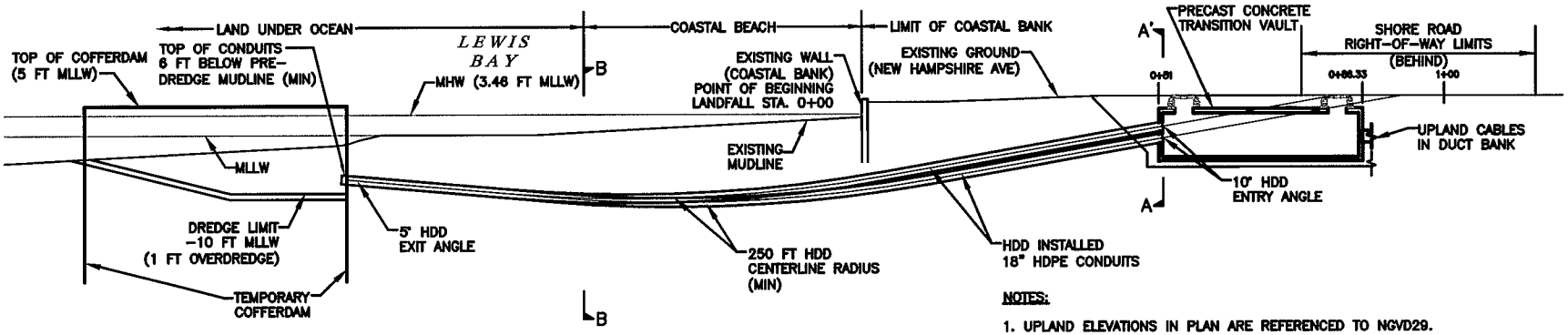

NOTES:

1. UPLAND ELEVATIONS IN PLAN ARE REFERENCED TO NGVD29.
2. THERE IS NO ACCEPTED NGVD29 CONNECTION TO MLLW IN THE PROJECT AREA. RELATIONSHIP BETWEEN MLLW AND NGVD29 APPROXIMATED TO GENERATE PROFILE.
3. EXISTING GROUND ELEVATIONS IN PROFILE ARE ESTIMATED ONLY.
4. ACTUAL RELATIONSHIP MUST BE ESTABLISHED THROUGH SURVEY PRIOR TO CONSTRUCTION.

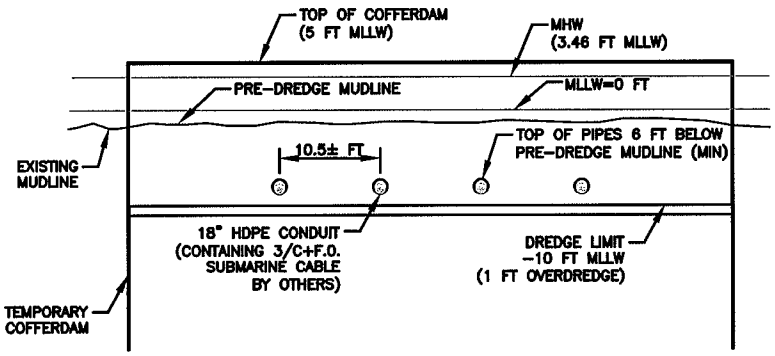

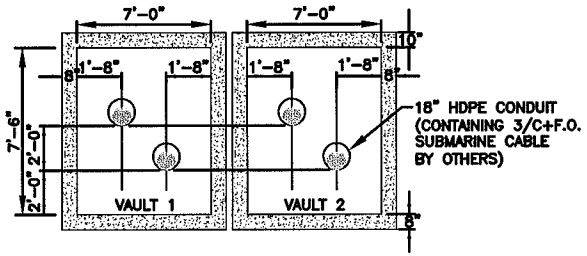

0 30 60
VERT. SCALE IN FEET

0 30 60
HORIZ. SCALE IN FEET

Purpose: Wind Energy Generation and Submarine/ Overland Transmission Cable Project	**Cross Section of Landfall Transition Location** **Cape Wind Project**	**SHEET NO. 13 of 18**
Cape Wind™ Energy for Life.	At: Yarmouth, Barnstable County, Massachusetts In: Nantucket Sound Applicant: Cape Wind Associates, LLC	**DATE: February 15, 2007** **PROJECT NO. E159-504**

ESS Group Inc.

DATE: Jan 11, 2008 – 12:02PM
FILENAME: H:\E159\ACOE 2008\E159-ACOE-08_Fig-12-13-14.dwg

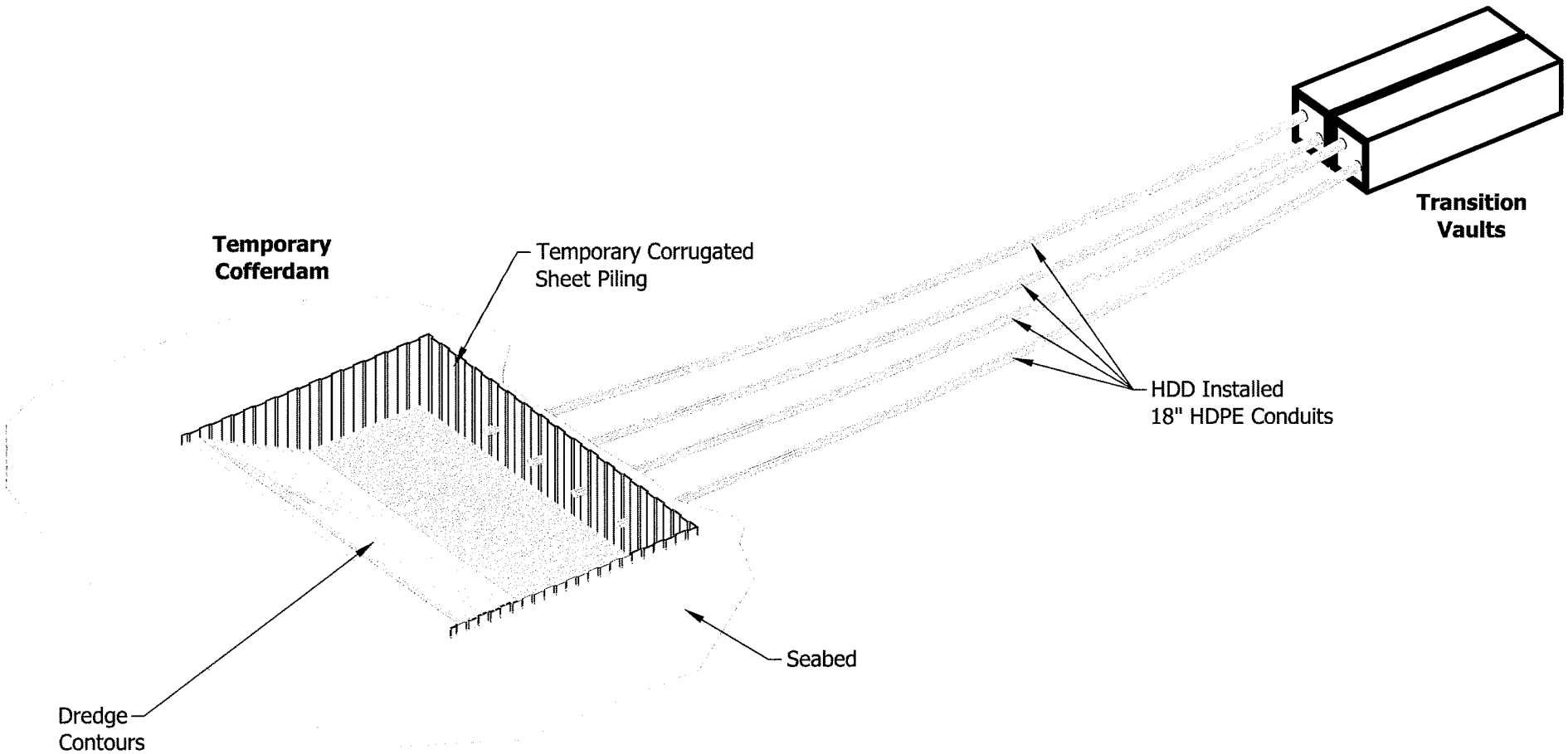

Scale: (Not to Scale)

Purpose: Wind Energy Generation and Submarine/ Overland Transmission Cable Project	**3D View of Landfall Transition Location** **Cape Wind Project**	**SHEET NO. 14 of 18**
Cape Wind™ Energy for Life.	At: Yarmouth, Barnstable County, Massachusetts In: Nantucket Sound Applicant: Cape Wind Associates, LLC	**DATE: February 15, 2007** **PROJECT NO. E159-504**

ESS Group Inc.

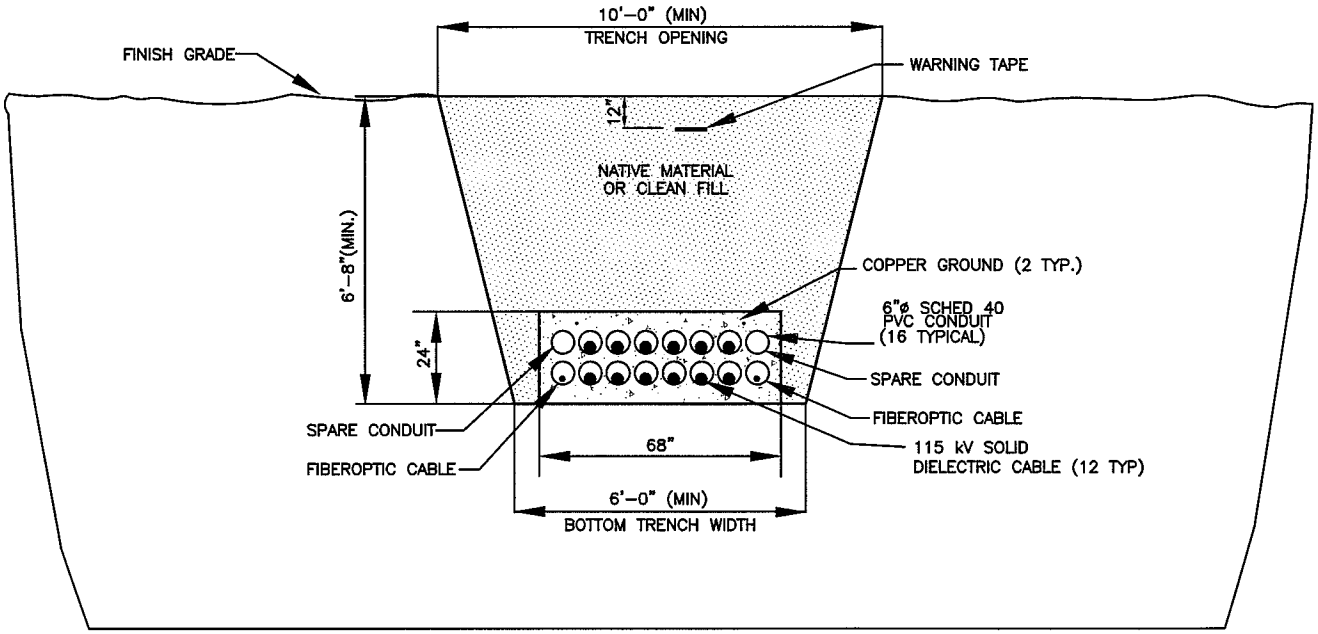

UPLAND CABLE TRENCH CROSS-SECTION (IN ROADWAYS)
CONCRETE ENCASED DUCTBANK

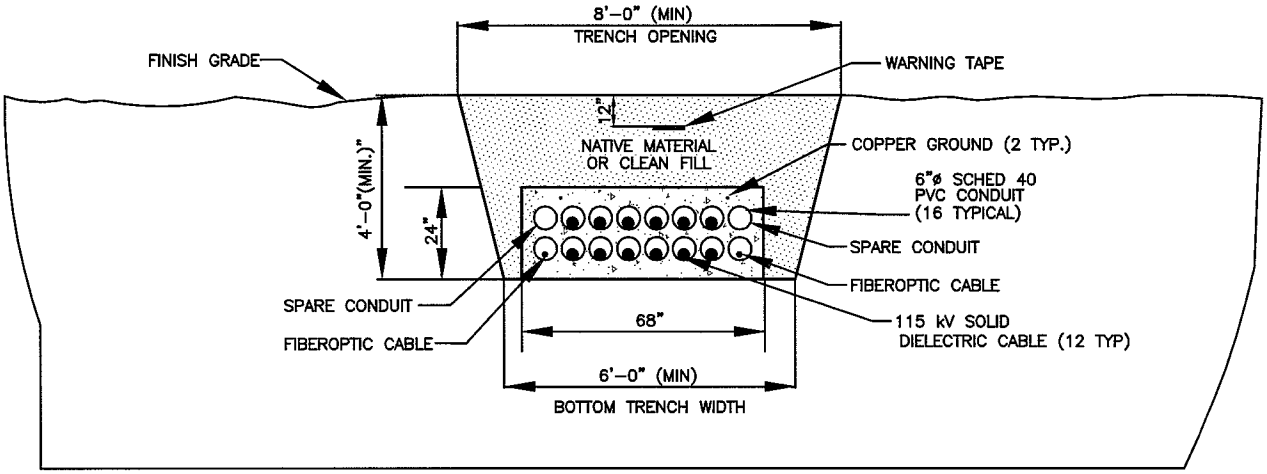

UPLAND CABLE TRENCH CROSS SECTION (IN R.O.W.)
CONCRETE ENCASED DUCTBANK

NOTE:
NATIVE MATERIAL TO BE USED ONLY IF DETERMINED TO HAVE APPROPRIATE THERMAL RESISTIVITY AND TO BE ACCEPTABLE IN ACCORDANCE WITH THE SOIL MANAGEMENT PLAN.

Scale: (Not to Scale)

Purpose: Wind Energy Generation and Submarine/ Overland Transmission Cable Project	**Typical "8-over-8" Ductbank Cross Section** **Cape Wind Project**	**SHEET NO. 15 of 18** **DATE: 02/15/07**
Cape Wind™ Energy for Life.	At: Yarmouth, Barnstable County, Massachusetts In: Nantucket Sound Applicant: Cape Wind Associates, LLC	**PROJECT NO. E159-504**

DATE: Jan 11, 2008 - 12:03PM
FILENAME: H:\E159\ACOE 2008\E159-ACOE-08_Fig-15-16-17-18.dwg

ESS Group Inc.

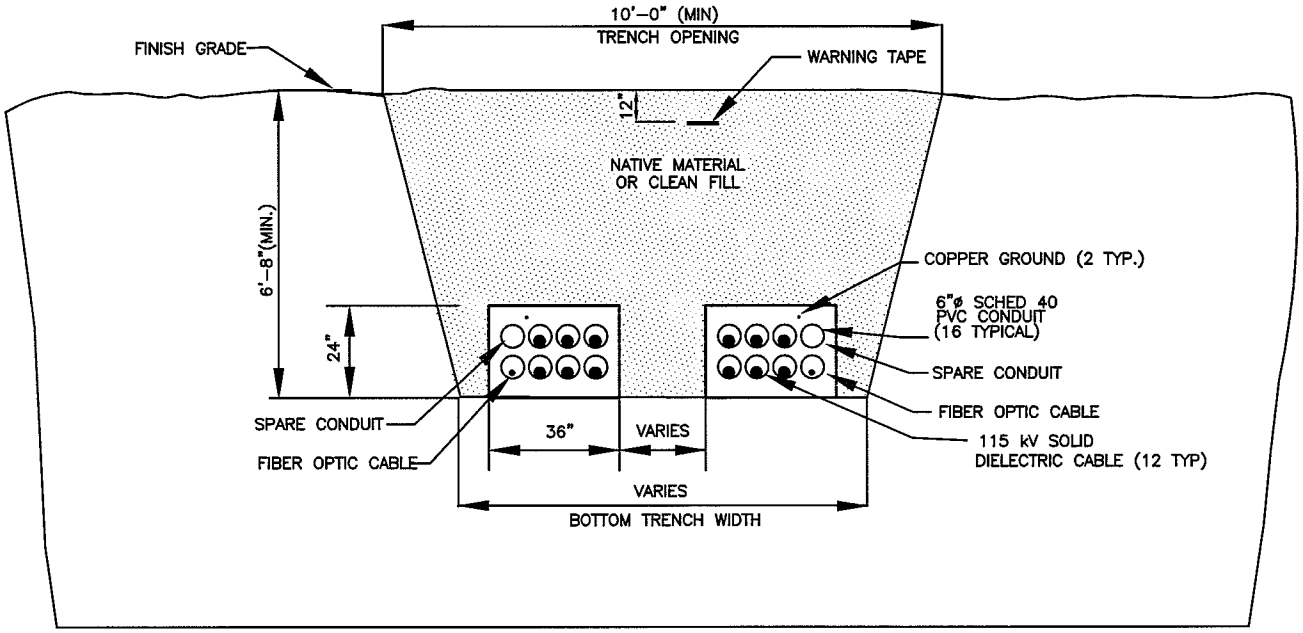

UPLAND CABLE TRENCH 4-OVER-4 CROSS-SECTION (IN ROADWAYS)

CONCRETE ENCASED DUCTBANK

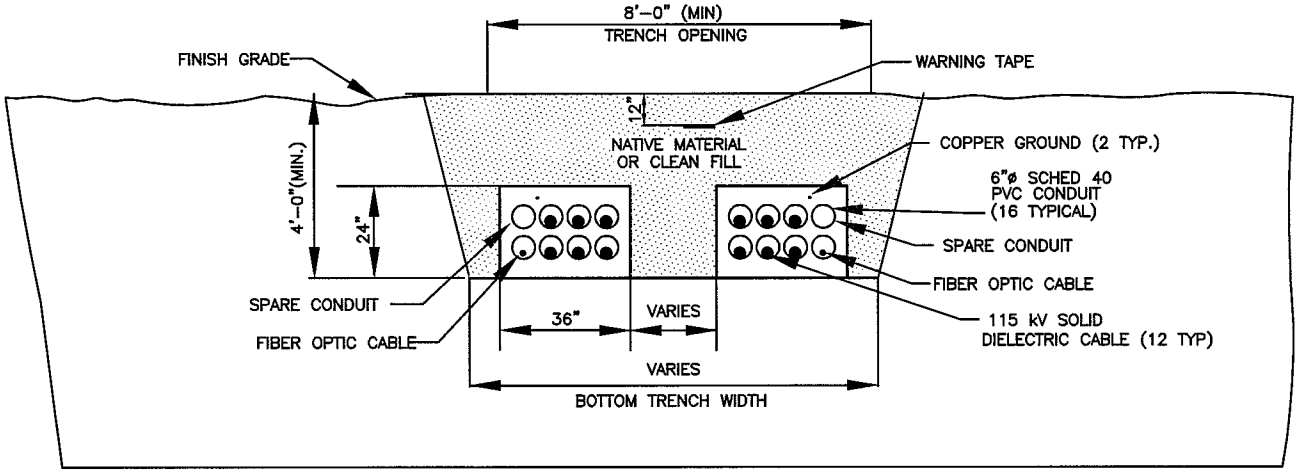

UPLAND CABLE TRENCH 4-OVER-4 CROSS SECTION (IN R.O.W.)

CONCRETE ENCASED DUCTBANK

NOTE:
NATIVE MATERIAL TO BE USED ONLY IF DETERMINED TO HAVE APPROPRIATE THERMAL RESISTIVITY AND TO BE ACCEPTABLE IN ACCORDANCE WITH THE SOIL MANAGEMENT PLAN.

Scale: (Not to Scale)

Purpose: Wind Energy Generation and Submarine/ Overland Transmission Cable Project	**Typical "4-over-4" Ductbank Cross Section** **Cape Wind Project**	**SHEET NO. 16 of 18** **DATE: 02/15/07**
Cape Wind™ Energy for Life.	At: Yarmouth, Barnstable County, Massachusetts In: Nantucket Sound Applicant: Cape Wind Associates, LLC	**PROJECT NO. E159-504**

DATE: Jan 11, 2008 - 12:03PM
FILENAME: H:\E159\ACOE 2008\E159-ACOE-08_Fig-15-16-17-18.dwg

ESS Group Inc.

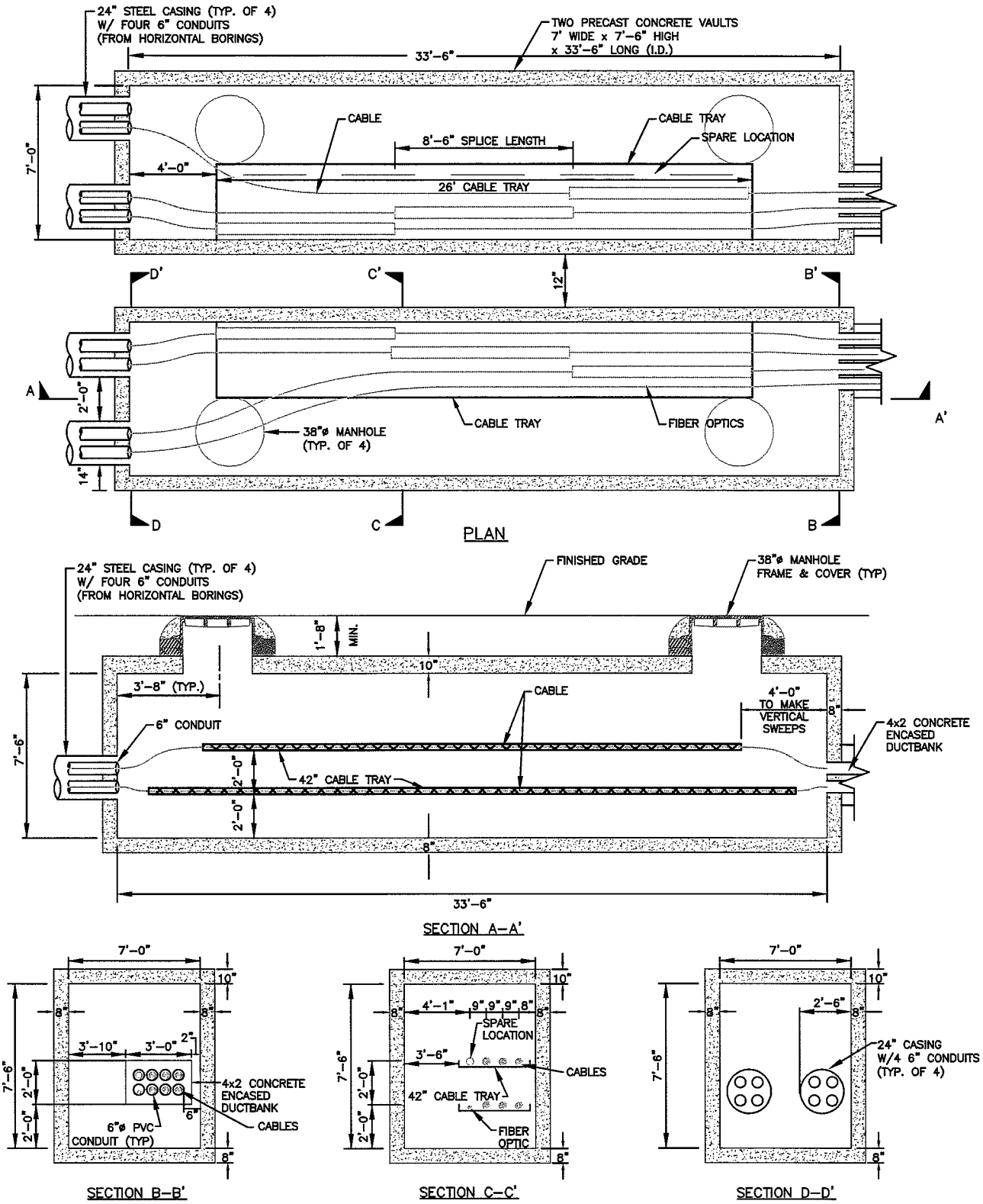

Scale: (Not to Scale)

Purpose: Wind Energy Generation and Submarine/ Overland Transmission Cable Project	**115 kV Upland Transition Vault** **Cape Wind Project**	**SHEET NO. 17 of 18** **DATE: 02/15/07**
Cape Wind™ Energy for Life.	At: Yarmouth, Barnstable County, Massachusetts In: Nantucket Sound Applicant: Cape Wind Associates, LLC	**PROJECT NO. E159-504**

DATE: Jan 11, 2008 – 12:04PM
FILENAME: H:\E159\ACOE 2008\E159-ACOE-08_Fig-15-16-17-18.dwg

ESS Group Inc.

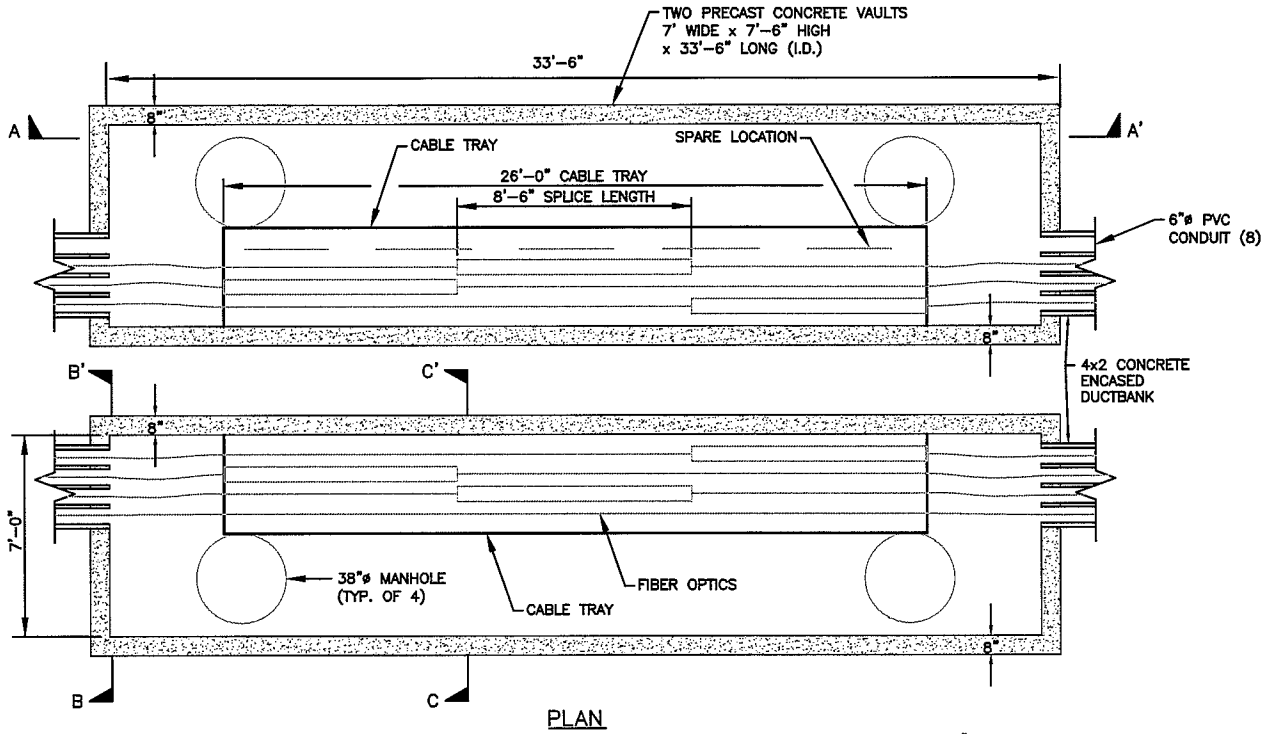

PLAN

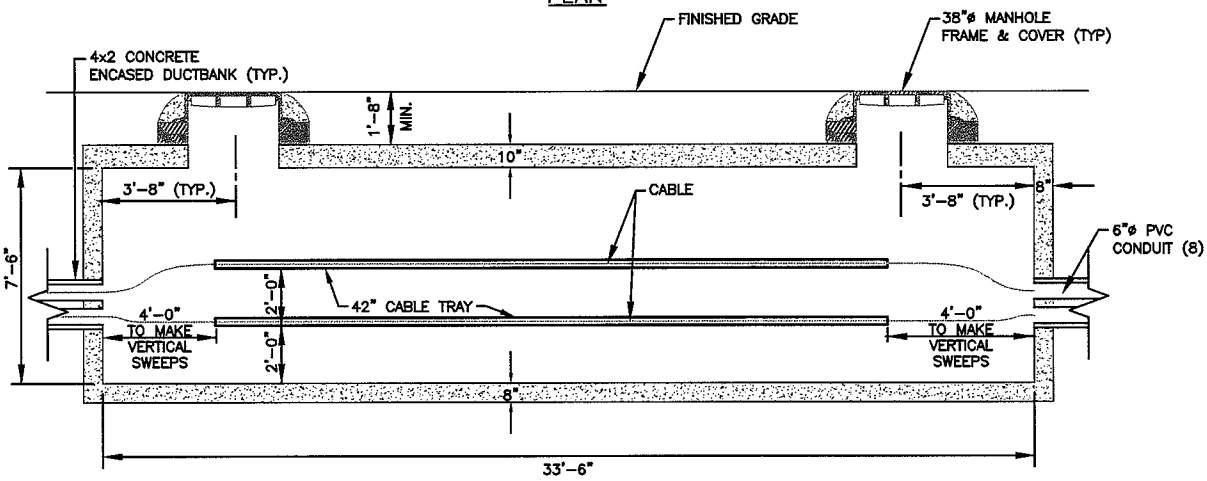

SECTION A–A'

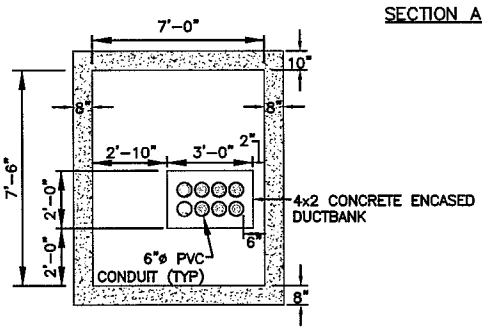

SECTION B–B'

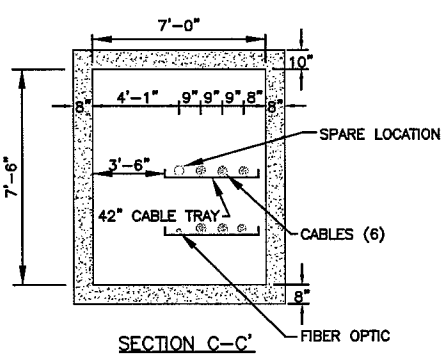

SECTION C–C'

Scale: (Not to Scale)

Purpose: Wind Energy Generation and Submarine/ Overland Transmission Cable Project	**115 kV Upland Splice Vault** **Cape Wind Project**	**SHEET NO. 18 of 18** **DATE: 02/15/07**
Cape Wind™ Energy for Life.	At: Yarmouth, Barnstable County, Massachusetts In: Nantucket Sound Applicant: Cape Wind Associates, LLC	**PROJECT NO. E159-504**

DATE: Jan 11, 2008 – 12:04PM
FILENAME: H:\E159\ACOE 2008\E159-ACOE-08_Fig-15-16-17-18.dwg

ESS Group Inc.