PUBLIC NOTICE

US Army Corps of Engineers ®
New England District

696 Virginia Road
Concord, MA 01742-2751

Date: November 20, 2007
Comment Period Ends: December 21, 2007
File Number: NAE-2007-1290
In Reply Refer To: Paul J. Sneeringer 978-318-8491
Or by e-mail: paul.j.sneeringer@usace.army.mil

The District Engineer has received a permit application from the applicant below to **conduct work in waters of the United States** as described below. The Corps is soliciting comments on both the project itself and the range of issues to be addressed in the environmental documentation.

APPLICANT: MassHighway – Boundary Street Bridge Replacement over the Assabet River

ACTIVITY: To discharge dredged and/or fill material in waters of the United States, including jurisdictional wetlands, associated with the Assabet River in order to replace the Boundary Street Bridge. MassHighway is currently reviewing several replacement alternatives for this bridge. MassHighway's preferred alternative (Alternative 1) includes impacts to 72 square meters (0.018 acres) of waters of the United States. The work is described on the enclosed plans entitled "MARLBOROUGH BOUNDARY STREET OVER THE ASSABET RIVER," on a total of 22 sheets, and dated "NOVEMBER 2007."

WATERWAY AND LOCATION OF THE PROPOSED WORK:
This work is proposed in Assabet River at Boundary Street in Marlborough and Northborough, Massachusetts. The proposed location on the USGS Marlborough quadrangle sheet at 42.341340° N, 71.616978° W.

AUTHORITY:
Permits are required pursuant to:
_____Section 10 of the Rivers and Harbors Act of 1899
_XX_ Section 404 of the Clean Water Act
_____Section 103 of the Marine Protection, Research and Sanctuaries Act.

The decision whether to issue a permit will be based on an evaluation of the probable impact of the proposed activity on the public interest. That decision will reflect the national concern for both protection and utilization of important resources. The benefit which may reasonably accrue from the proposal must be balanced against its reasonably foreseeable detriments. All factors which may be relevant to the proposal will be considered, including the cumulative effects thereof; among those are: conservation, economics, aesthetics, general environmental concerns, wetlands, cultural value, fish and wildlife values, flood hazards, flood plain value, land use, navigation, shoreline erosion and accretion, recreation, water supply and conservation, water quality, energy needs, safety, food production and, in general, the needs and welfare of the people.

The Corps of Engineers is soliciting comments from the public; Federal, state, and local agencies and officials; Indian Tribes; and other interested parties in order to consider and evaluate the impacts of this proposed activity. Any comments received will be considered by the Corps of Engineers to determine whether to issue,

modify, condition or deny a permit for this proposal. To make this decision, comments are used to assess impacts on endangered species, historic properties, water quality, general environmental effects, and the other public interest factors listed above. Comments are used in the preparation of an Environmental Assessment and/or an Environmental Impact Statement pursuant to the National Environmental Policy Act. Comments are also used to determine the need for a public hearing and to determine the overall public interest of the proposed activity.

Where the activity involves the discharge of dredged or fill material into waters of the United States or the transportation of dredged material for the purpose of disposing it in ocean waters, the evaluation of the impact of the activity in the public interest will also include application of the guidelines promulgated by the Administrator, U.S Environmental Protection Agency, under authority of Section 404(b) of the Clean Water Act, and/or Section 103 of the Marine Protection Research and Sanctuaries Act of 1972 as amended.

SECTION 106 COORDINATION:
Based on his initial review, the District Engineer has determined that little likelihood exists for the proposed work to impinge upon properties with cultural or Native American significance, or listed in, or eligible for listing in, the National Register of Historic Places. Therefore, no further consideration of the requirements of Section 106 of the National Historic Preservation Act of 1966, as amended, is necessary. This determination is based upon one or more of the following:

a. The permit area has been extensively modified by previous work.
b. The permit area has been recently created.
c. The proposed activity is of limited nature and scope.
d. Review of the latest published version of the National Register shows that no presence of registered properties listed as being eligible for inclusion therein are in the permit area or general vicinity.
e. Coordination with the State Historic Preservation Officer and/or Tribal Historic Preservation Officer(s)

The States of Connecticut, Maine, Massachusetts, New Hampshire and Rhode Island have approved **Coastal Zone Management Programs**. Where applicable the applicant states that any proposed activity will comply with and will be conducted in a manner that is consistent with the approved Coastal Zone Management Program. By this Public Notice, we are requesting the State concurrence or objection to the applicant's consistency statement.

The following authorizations have been applied for, or have been, or will be obtained:

( ) Permit, License or Assent from State.
( ) Permit from Local Wetland Agency or Conservation Commission.
(XX) Water Quality Certification in accordance with Section 401 of the Clean Water Act.

In order to properly evaluate the proposal, we are seeking public comment. Anyone wishing to comment is encouraged to do so. **Comments should be submitted in writing by the above date.** If you have any questions, please contact Paul Sneeringer at (978) 318-8491, (800) 343-4789 or (800) 362-4367, if calling from within Massachusetts.

Any person may request, in writing, within the comment period specified in this notice, that a public hearing be held to consider the application. Requests for a public hearing shall specifically state the reasons for holding a public hearing. The Corps holds public hearings for the purpose of obtaining public comments when that is the best means for understanding a wide variety of concerns from a diverse segment of the public.

The initial determinations made herein will be reviewed in light of facts submitted in response to this notice. All comments will be considered a matter of public record. Copies of letters of objection will be forwarded to the applicant who will normally be requested to contact objectors directly in an effort to reach an understanding.

For more information on the New England District Corps of Engineers programs, visit our website at http://www.nae.usace.army.mil.

THIS NOTICE IS NOT AN AUTHORIZATION TO DO ANY WORK.

Karen K. Adams
Chief, Permits and Enforcement Branch
Regulatory Division

If you would prefer not to continue receiving Public Notices, please contact Ms. Tina Chaisson at (978) 318-8058 or e-mail her at bettina.m.chaisson@usace.army.mil. You may also check here ( ) and return this portion of the Public Notice to: Bettina Chaisson, Regulatory Division, U.S. Army Corps of Engineers, 696 Virginia Road, Concord, MA 01742-2751.

NAME: _____
ADDRESS: _____

DESCRIPTION OF ALTERNATIVES

The alternatives described below are intended to define a range of practicable alternatives for replacing the bridge at this location. Flood elevations from the Hydrology/Hydraulic report prepared by Metcalf & Eddy dated December 1987 were used in the preparation of the alternatives. These elevations were converted from feet and NGVD datum to meters and NAVD datum of 1988 for this report. For Alternates III & IV, the limits of the project extended beyond the existing ground survey that was available. For areas where information was needed beyond the survey limits, the information was estimated.

Alternative I

This alternative represents the project as currently designed. The span of the bridge is approximately 18 meters and the roadway profile remains the same as the existing roadway profile which is approximately 0.8 meters below the 10 year flood elevation of 68.5 at Station 1+80. The roadway width is 8 meters at the bridge and then tapers to meet the existing roadway width of 6 meters. The roadway construction extends approximately 58.5 meters each side of the bridge for a total project length of 135 meters. The proposed low chord is approximately 175 mm lower than existing, but the span is approximately 5 meters longer and therefore provides approximately the same hydraulic opening as the existing bridge. The average low chord elevation is approximately 200 mm below the Ordinary High Water Elevation of 66.5.

Alternative II

This alternative raises the bottom chord of the bridge superstructure above the Ordinary High Water elevation. The span of the bridge is approximately 18 meters and the roadway profile at the bridge will be raised by approximately 0.8 meters above the existing roadway elevation of 67.73 at Station 1+80 which makes it approximately the same as the 10 year flood elevation of 68.5. The roadway width is 8 meters along the length of the construction until the last 15 meters at each end where it tapers to meet the existing roadway width of 6 meters. The limits of the construction are extended to approximately 103.5 meters west of the bridge to approximately 90.5 meters east of the bridge for a total project length of 212 meters. The proposed extreme low chord elevation of 67.121 is approximately 620 mm above the Ordinary High Water elevation of 66.5. The extreme low chord is at the southwest corner of the bridge. Due to the cross slope and the raising profile of the roadway, all of the other corners of the bridge are higher.

Alternative III

This alternative raises the bottom chord of the bridge superstructure above the 10 year flood elevation of 68.5. The span of the bridge is approximately 30.5 meters and the roadway profile at the bridge will be raised by approximately 2.8 meters above the existing roadway elevation of 67.73 to elevation 70.5 at Station 1+80. The roadway width is 8 meters along the length of the construction until the last 15 meters at each end where it tapers to meet the existing roadway width of 6 meters. The limits of the construction are extended to approximately 167.5 meters west of the existing bridge to approximately 134.5 meters east of the existing bridge for a total project length of 320 meters. The proposed extreme low chord elevation of 68.589 is slightly higher than the 10 year flood elevation of 68.5. The extreme low chord is at the southwest corner of the bridge. Due to the cross slope and the raising profile of the roadway, all of the other corners of the bridge are higher.

Alternative IV

This alternative is similar to Alternative III and raises the bottom chord of the bridge superstructure above the 10 year flood elevation of 68.5. The span of the bridge is approximately 30.5 meters and the roadway profile at the bridge will be raised by approximately 2.8 meters above the existing roadway elevation of 67.73 to elevation 70.5 at Station 1+80. The roadway width is 8 meters along the length of the construction until the last 15 meters at each end where it tapers to meet the existing roadway width of 6 meters. This alternate uses retaining walls along the edge of the roadway to limit the impacts to the wetlands and the surrounding vegetation. The limits of the construction are extended to approximately 167.5 meters west of the existing bridge to approximately 134.5 meters east of the existing bridge for a total project length of 320 meters. The proposed extreme low chord elevation of 68.589 is slightly higher than the 10 year flood elevation of 68.5. The extreme low chord is at the southwest corner of the bridge. Due to the cross slope and the raising profile of the roadway, all of the other corners of the bridge are higher.

COMPARISON OF ALTERNATIVES

The following table shows the comparison of particular items for the four alternatives

Item	Alternate I	Alternate II	Alternate III	Alternate IV
Length of Roadway Construction (M)	135 M	212 M	320 M	320 M
*Impacts to Vegetation	625 SM	1990 SM	3775 SM	2125 SM
Impacts to Wetlands	0	79 SM	288 SM	0
Fee Takings	42 SM	334 SM	454 SM	699 SM
Temporary Impacts to LUW	36 SM	36 SM	0	0
Permanent Impacts to LUW	36 SM	36 SM	0	0
Roadway Costs	$370,000	$550,000	$770,000	$650,000
Bridge Costs	$975,000	$975,000	$1,423,000	$1,423,000
Retaining Wall Costs	$0	$0	$0	$692,300
Total Cost	$1,345,000	$1,525,000	$2,193,000	$2,765,300
Roadway Above 10 yr flood	No	Yes	Yes	Yes
Low Chord Above OHW	No	Yes	Yes	Yes

*** The area around the Boundary Street Bridge is heavily wooded with lots of trees. Some of the trees are very large and are near the roadway. Alternates II, III & IV removes an increasing amount of trees and vegetation. Removing the trees and vegetation would largely impact the appearance of the landscape.**

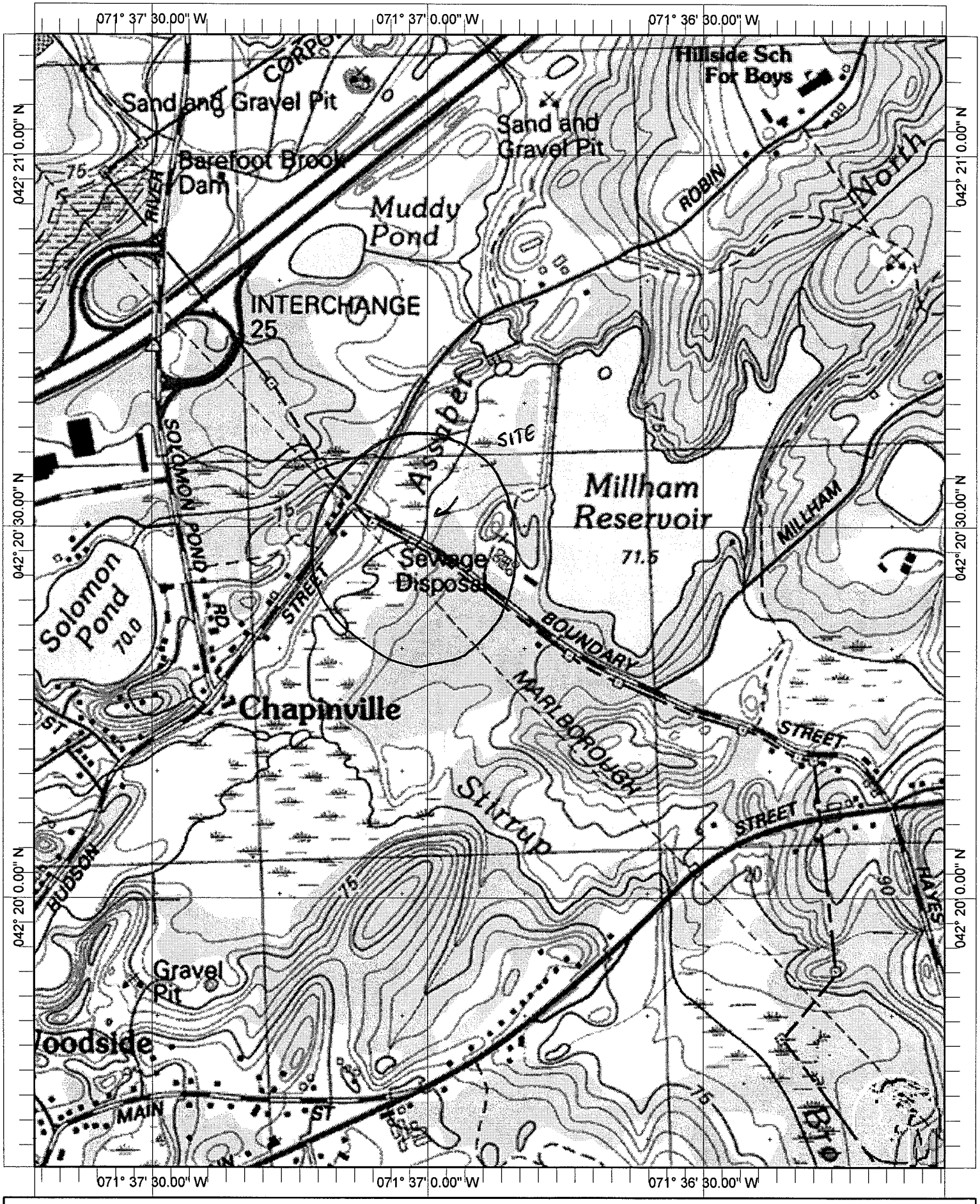

Name: MARLBOROUGH
Date: 11/14/107
Scale: 1 inch equals 1000 feet

Location: 042° 20' 23.9" N 071° 36' 53.2" W
Caption: NAE-2007-1290
MARLBOROUGH BOUNDARY
STREET OVER ASSABET RIVER

Copyright (C) 1997, Maptech, Inc.

MARLBOROUGH
BOUNDARY STREET OVER ASSABET RIVER

STATE	FED. AID PROJ. NO.	FISCAL YEAR	SHEET NO.	TOTAL SHEETS
MASS	NFA	2008		
PROJECT FILE NO. 603506				

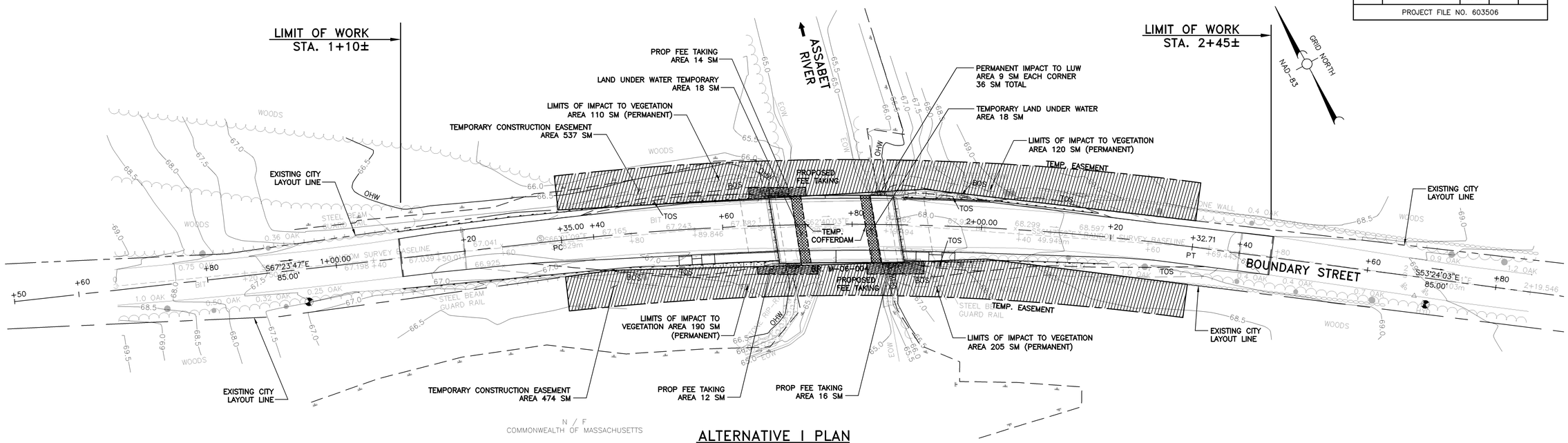

ALTERNATIVE I PLAN
(CURRENT DESIGN)

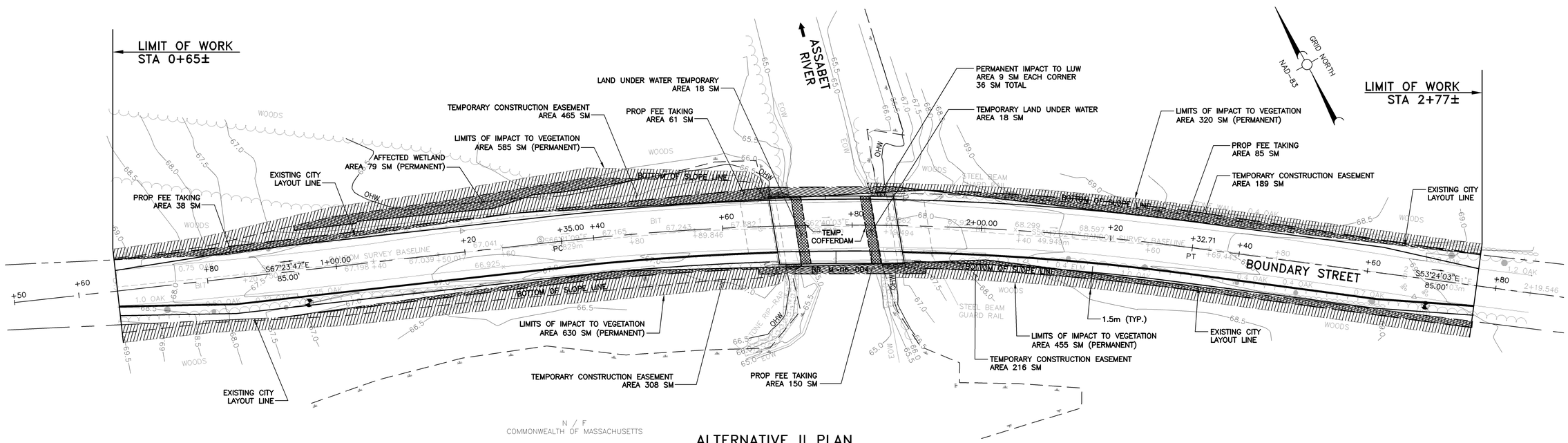

ALTERNATIVE II PLAN
(RAISE PROFILE 0.8m)

GRAPHIC SCALE
(IN METERS)

1 : 300

MARLBOROUGH
BOUNDARY STREET OVER ASSABET RIVER

STATE	FED. AID PROJ. NO.	FISCAL YEAR	SHEET NO.	TOTAL SHEETS
MASS	NFA	2008		
PROJECT FILE NO. 603506				

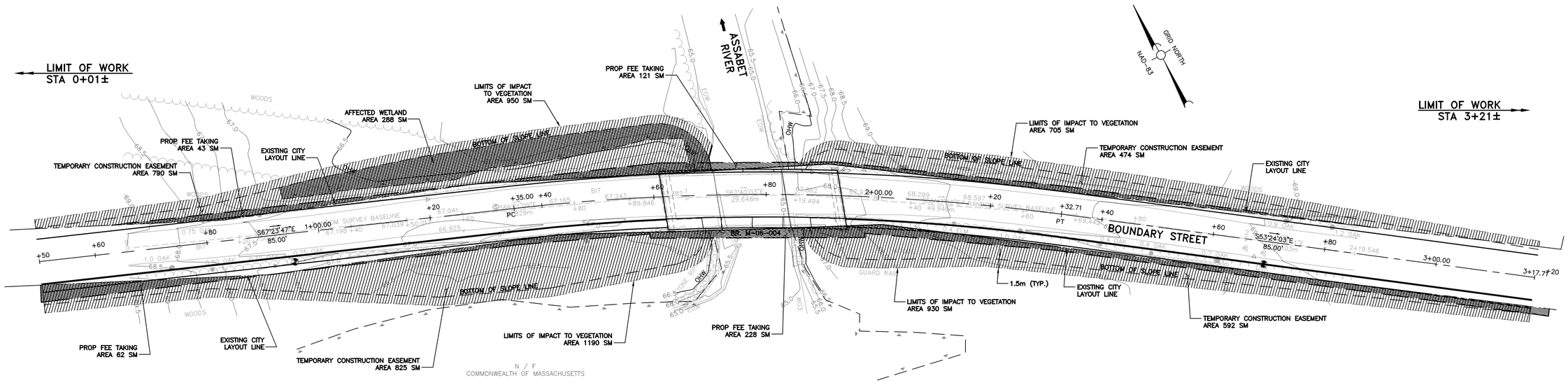

ALTERNATIVE III PLAN

(RAISE PROFILE 2.8m WITHOUT WALLS)

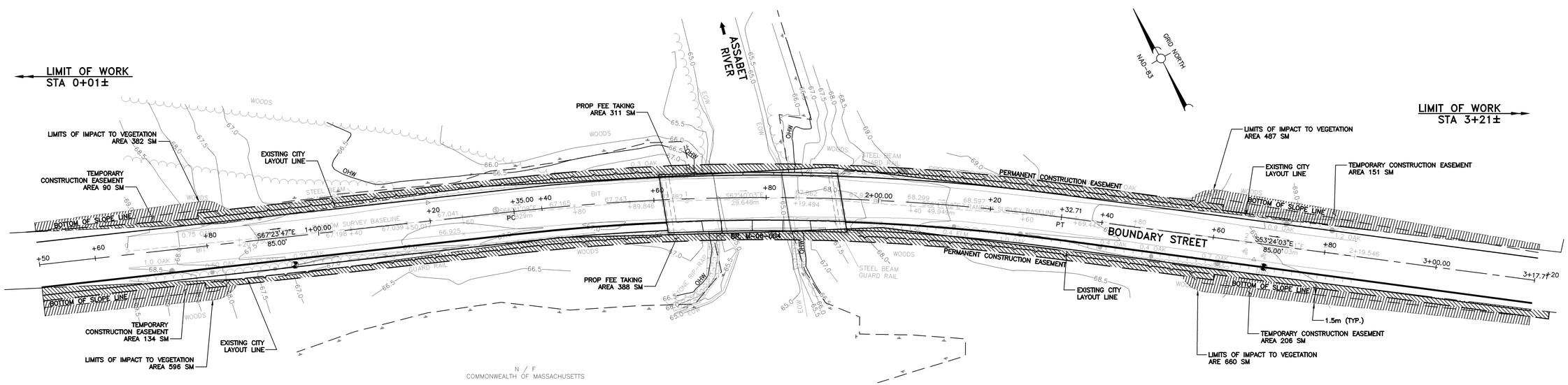

ALTERNATIVE IV PLAN

(RAISE PROFILE 2.8m WITH WALL)

GRAPHIC SCALE

(IN METERS)

1 : 350

MARLBOROUGH
BOUNDARY STREET OVER ASSABET RIVER

STATE	FED. AID PROJ. NO.	FISCAL YEAR	SHEET NO.	TOTAL SHEETS
MASS	NFA	2008		
PROJECT FILE NO. 603506				

PROFILE
ALTERNATIVE I

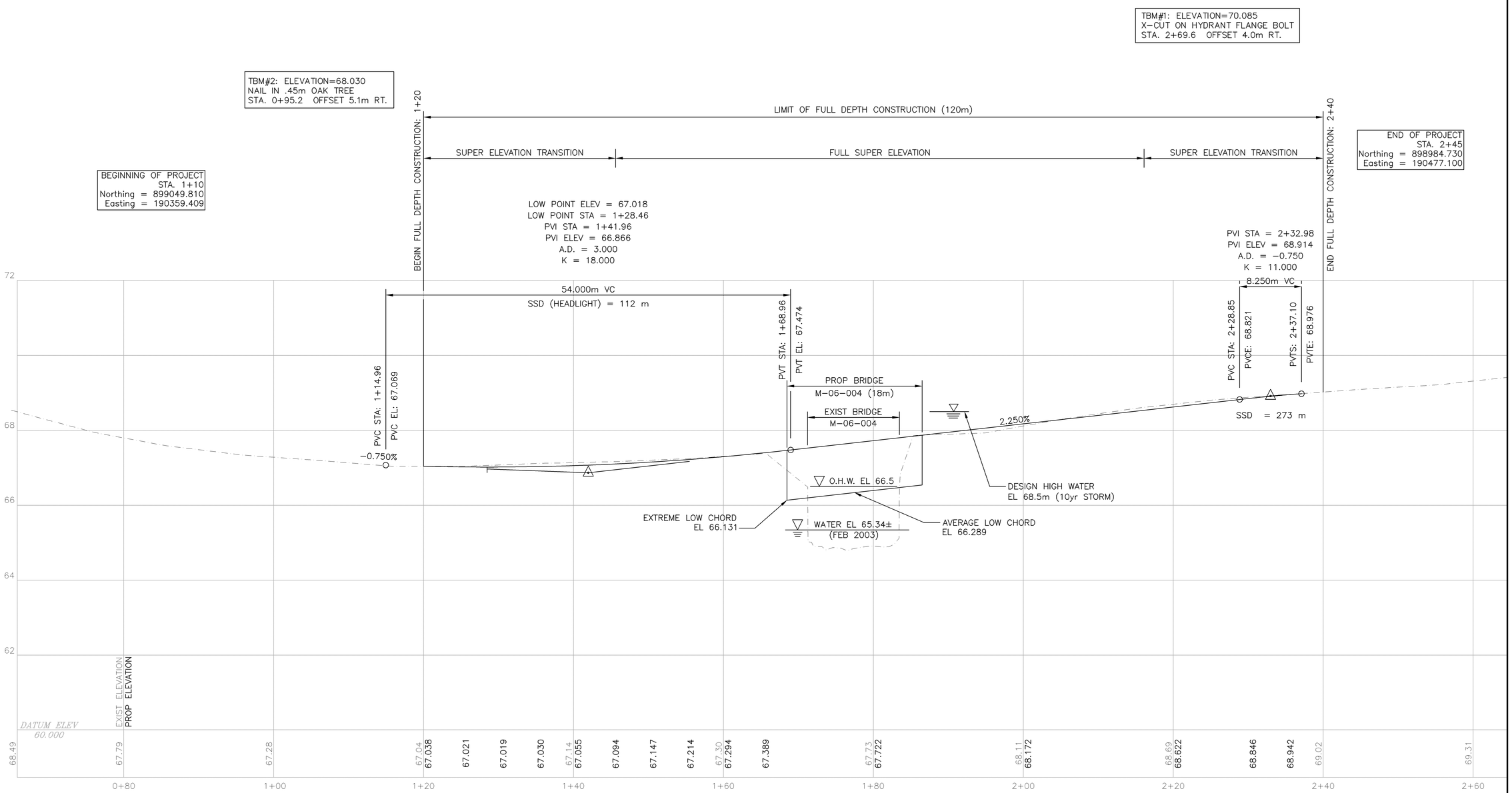

PROFILE SCALE: 1:50 (V)
1:250 (H)

NOTE: STATIONS & ELEVATIONS ARE IN METERS
ELEVATIONS ARE BASED ON NAVD OF 1988

MARLBOROUGH
BOUNDARY STREET OVER ASSABET RIVER

STATE	FED. AID PROJ. NO.	FISCAL YEAR	SHEET NO.	TOTAL SHEETS
MASS	NFA	2008		
PROJECT FILE NO. 603506				

PROFILE
ALTERNATIVE II

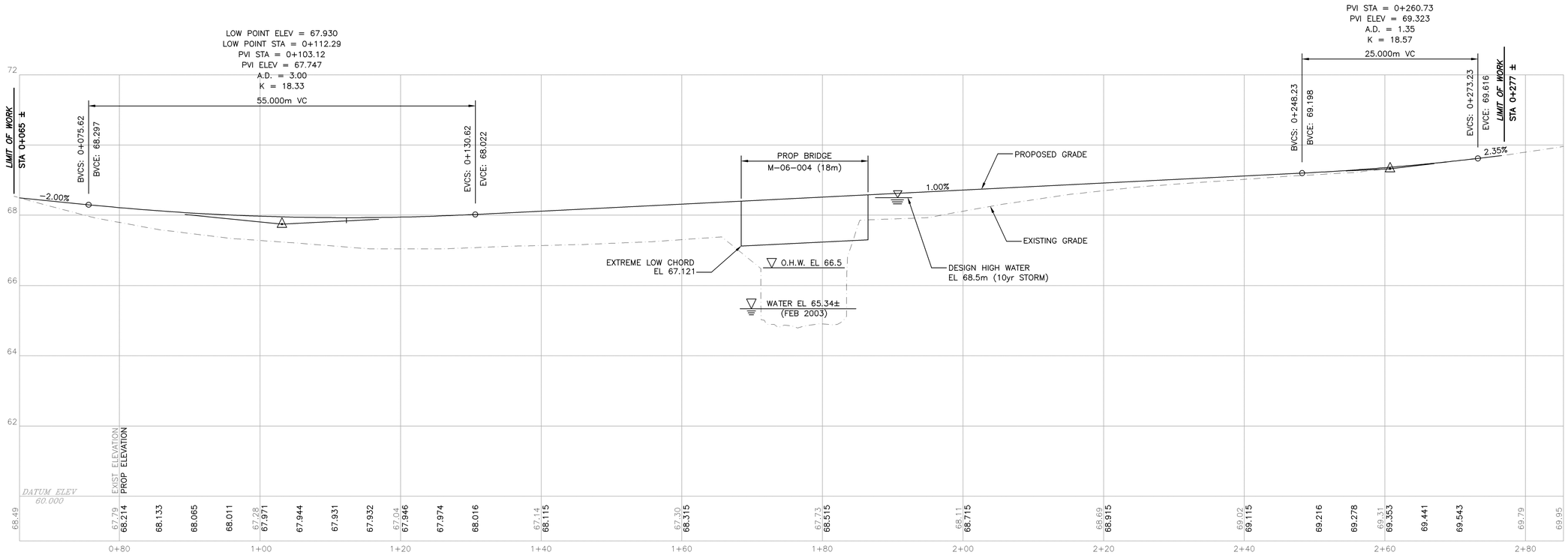

SCALE: 1:60 VERTICAL
1:300 HORIZONTAL

NOTE: STATIONS & ELEVATIONS ARE IN METERS
ELEVATIONS ARE BASED ON NAVD OF 1988

MARLBOROUGH
BOUNDARY STREET OVER ASSABET RIVER

STATE	FED. AID PROJ. NO.	FISCAL YEAR	SHEET NO.	TOTAL SHEETS
MASS	NFA	2008		
PROJECT FILE NO. 603506				

PROFILE
ALTERNATIVE III & IV

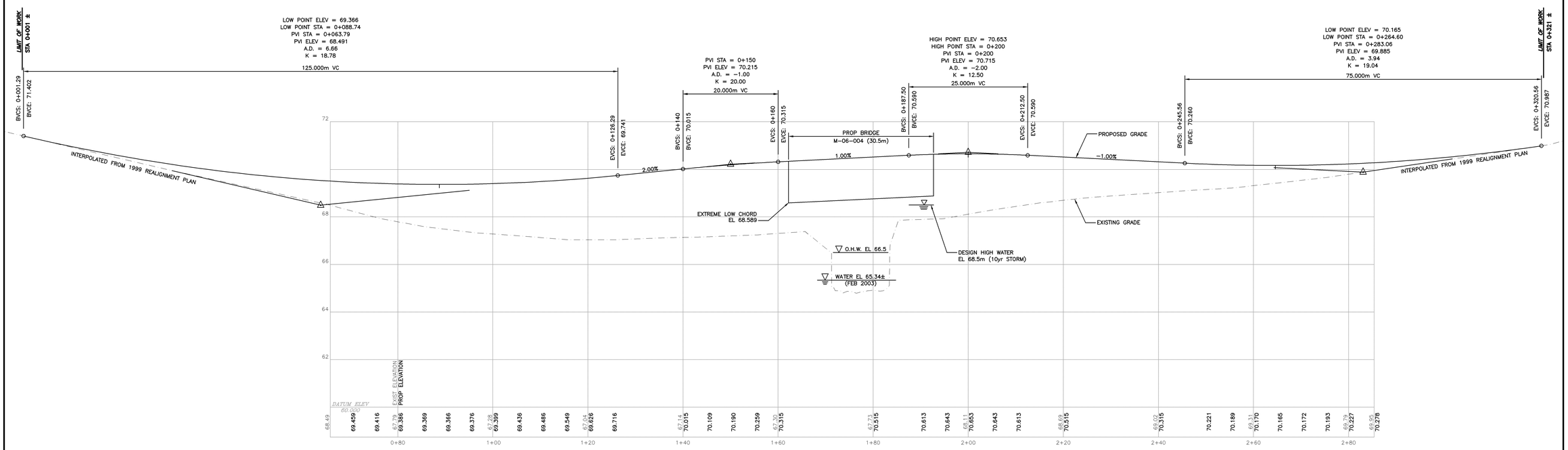

SCALE: 1:80 VERTICAL
1:400 HORIZONTAL

NOTE: STATIONS & ELEVATIONS ARE IN METERS
ELEVATIONS ARE BASED ON NAVD OF 1988

MARLBOROUGH
BOUNDARY STREET OVER ASSABET RIVER

STATE	FED. AID PROJ. NO.	FISCAL YEAR	SHEET NO.	TOTAL SHEETS
MASS	NFA	2008		
PROJECT FILE NO. 603506				

CROSS SECTIONS
ALTERNATIVE I

SUPERELEVATION NOTES:

STA 1+20 – MATCH EXISTING PAVEMENT. (APPROXIMATELY 0.157% LEFT, 2.820% RIGHT)
STA 1+20 – STA 1+37.753 – TRANSITION TO INTERMEDIATE SUPERELEVATION (2.820%)
STA 1+37.753 – STA 1+45.62 – TRANSITION TO FULL SUPERELEVATION (4.0%)
STA 1+45.62 – STA 2+16.113 – MAINTAIN FULL SUPERELEVATION (4.0%)
STA 2+16.113 – STA 2+31.78 – TRANSITION TO INTERMEDIATE SUPERELEVATION (1.650%).
STA 2+31.78 – STA 2+40 – TRANSITION TO MATCH EXISTING PAVEMENT (APPROXIMATELY 1.650% LEFT, .417% RIGHT)

1+40

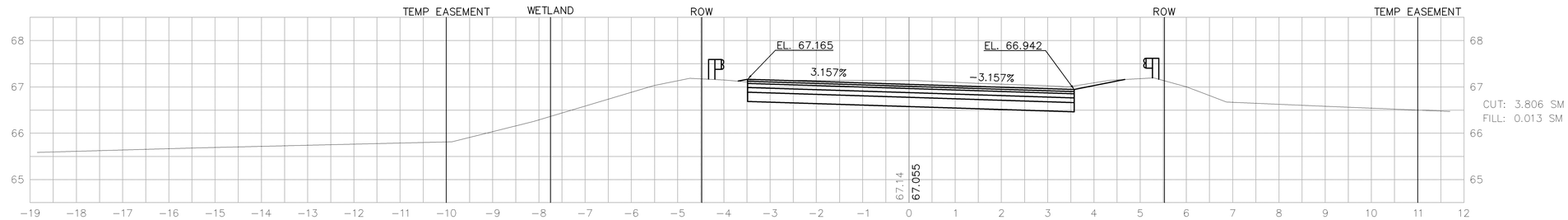

1+30

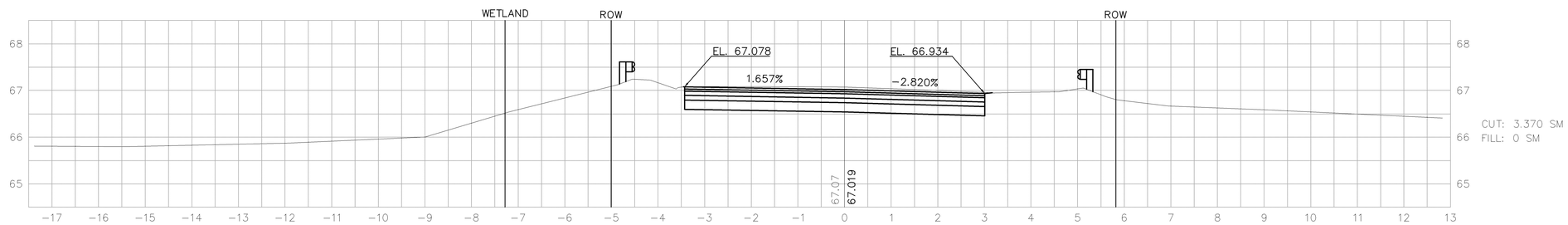

P.C. STA. = 1=35.000
R = 400.00'
P.T. = STA. 2+32.710

1+20

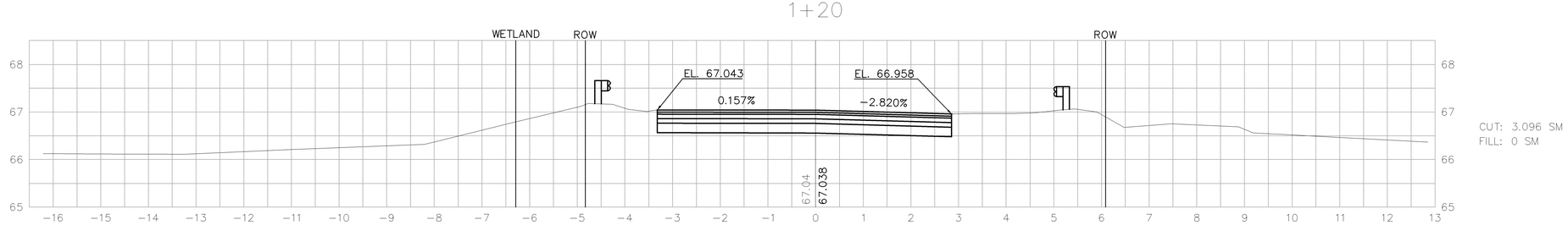

HORIZONTAL SCALE 1:50
VERTICAL SCALE 1:50

CROSS-SECTIONS – _____
PRELIMINARY
PLOTTED BY _____ DATE _____ 20___
CHECKED BY _____ DATE _____ 20___
NOTE BOOK NO. _____ PAGE _____
TEMPLATES
PLOTTED BY _____ DATE _____ 20___
CHECKED BY _____ DATE _____ 20___
CALC. BOOK NO. _____ PAGE _____

MARLBOROUGH
BOUNDARY STREET OVER ASSABET RIVER

STATE	FED. AID PROJ. NO.	FISCAL YEAR	SHEET NO.	TOTAL SHEETS
MASS	NFA	2008		
PROJECT FILE NO. 603506				

CROSS SECTIONS
ALTERNATIVE I

SUPERELEVATION NOTES:

STA 1+20 – MATCH EXISTING PAVEMENT. (APPROXIMATELY 0.157% LEFT, 2.820% RIGHT)
STA 1+20 – STA 1+37.753 – TRANSITION TO INTERMEDIATE SUPERELEVATION (2.820%)
STA 1+37.753 – STA 1+45.62 – TRANSITION TO FULL SUPERELEVATION (4.0%)
STA 1+45.62 – STA 2+16.113 – MAINTAIN FULL SUPERELEVATION (4.0%)
STA 2+16.113 – STA 2+31.78 – TRANSITION TO INTERMEDIATE SUPERELEVATION (1.650%).
STA 2+31.78 – STA 2+40 – TRANSITION TO MATCH EXISTING PAVEMENT (APPROXIMATELY 1.650% LEFT, .417% RIGHT)

1+70

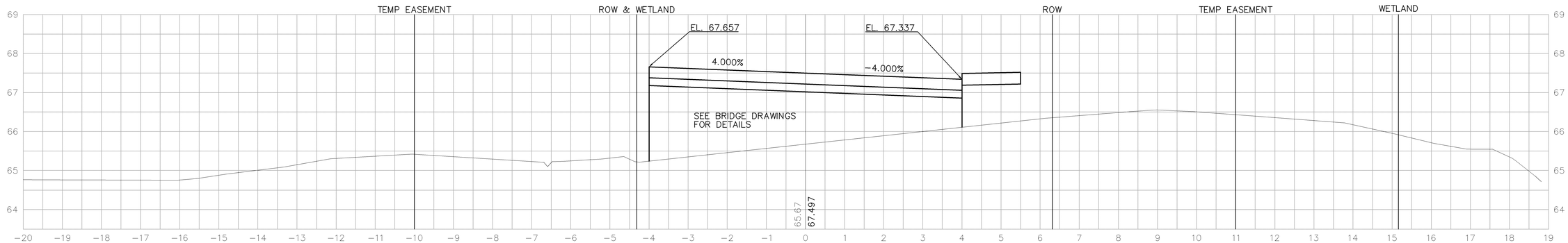

1+60

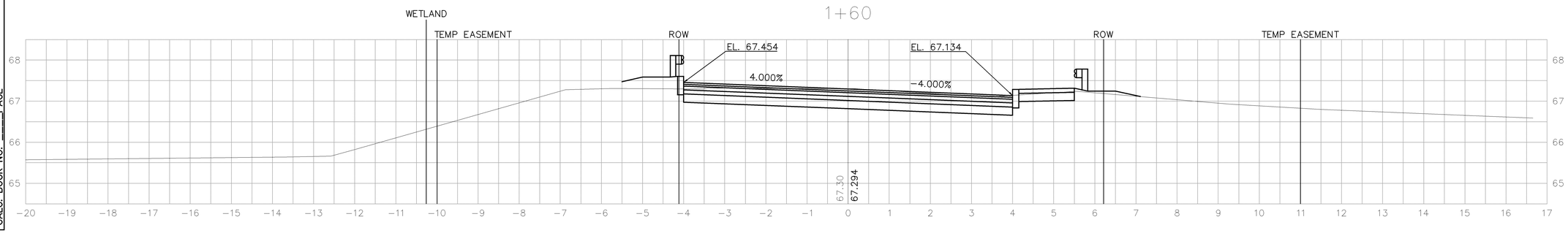

CUT: 3.792 SM
FILL: 0.421 SM

1+50

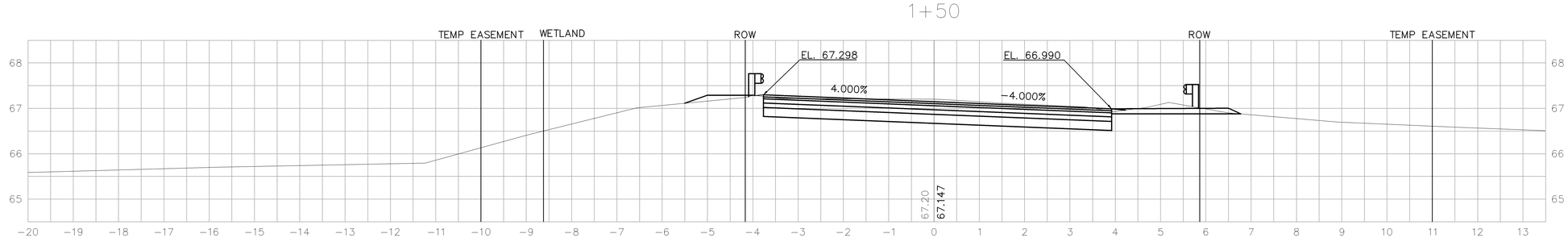

CUT: 3.758 SM
FILL: 0.208 SM

HORIZONTAL SCALE 1:50
VERTICAL SCALE 1:50

CROSS-SECTIONS – _____
PRELIMINARY
PLOTTED BY _____ DATE _____ 20___
CHECKED BY _____ DATE _____ 20___
NOTE BOOK NO. _____ PAGE _____
TEMPLATES
PLOTTED BY _____ DATE _____ 20___
CHECKED BY _____ DATE _____ 20___
CALC. BOOK NO. _____ PAGE _____

MARLBOROUGH
BOUNDARY STREET OVER ASSABET RIVER

STATE	FED. AID PROJ. NO.	FISCAL YEAR	SHEET NO.	TOTAL SHEETS
MASS	NFA	2008		
PROJECT FILE NO. 603506				

CROSS SECTIONS
ALTERNATIVE I

SUPERELEVATION NOTES:

STA 1+20 – MATCH EXISTING PAVEMENT. (APPROXIMATELY 0.157% LEFT, 2.820% RIGHT)
STA 1+20 – STA 1+37.753 – TRANSITION TO INTERMEDIATE SUPERELEVATION (2.820%)
STA 1+37.753 – STA 1+45.62 – TRANSITION TO FULL SUPERELEVATION (4.0%)
STA 1+45.62 – STA 2+16.113 – MAINTAIN FULL SUPERELEVATION (4.0%)
STA 2+16.113 – STA 2+31.78 – TRANSITION TO INTERMEDIATE SUPERELEVATION (1.650%).
STA 2+31.78 – STA 2+40 – TRANSITION TO MATCH EXISTING PAVEMENT (APPROXIMATELY 1.650% LEFT, .417% RIGHT)

CUT: 4.261 SM
FILL: 0.285 SM

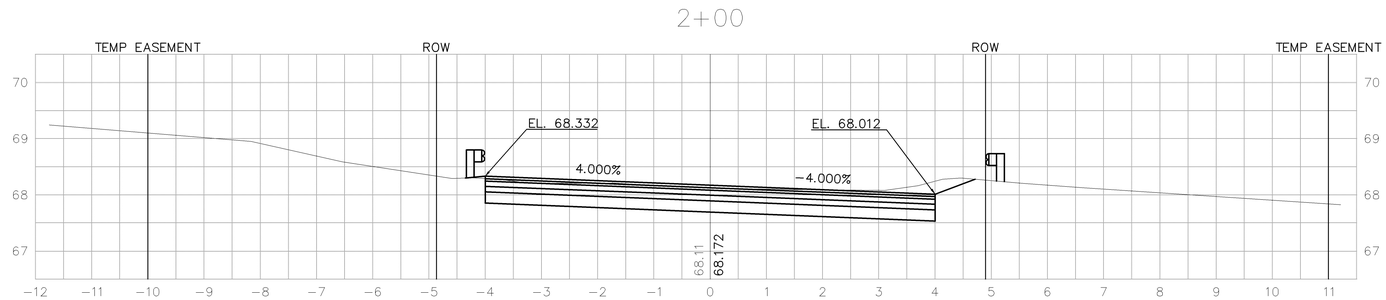

P.C. STA. = 1=35.000
R = 400.00'
P.T. = STA. 2+32.710

CUT: 3.613 SM
FILL: 0.931 SM

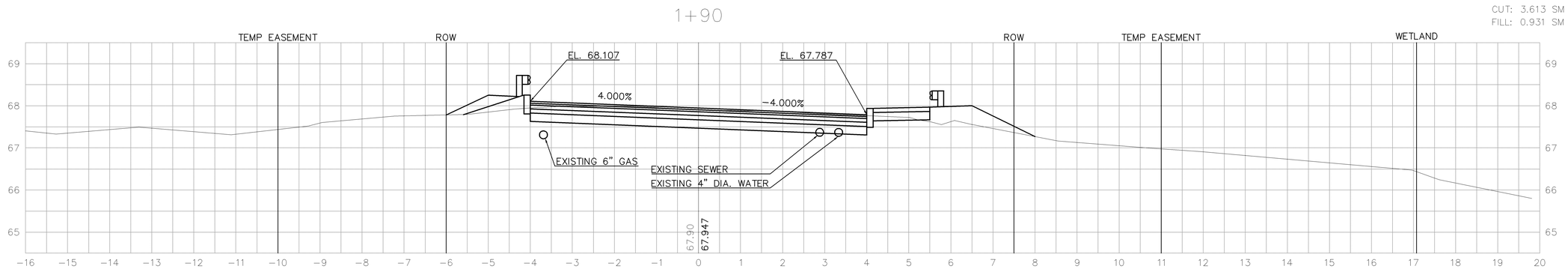

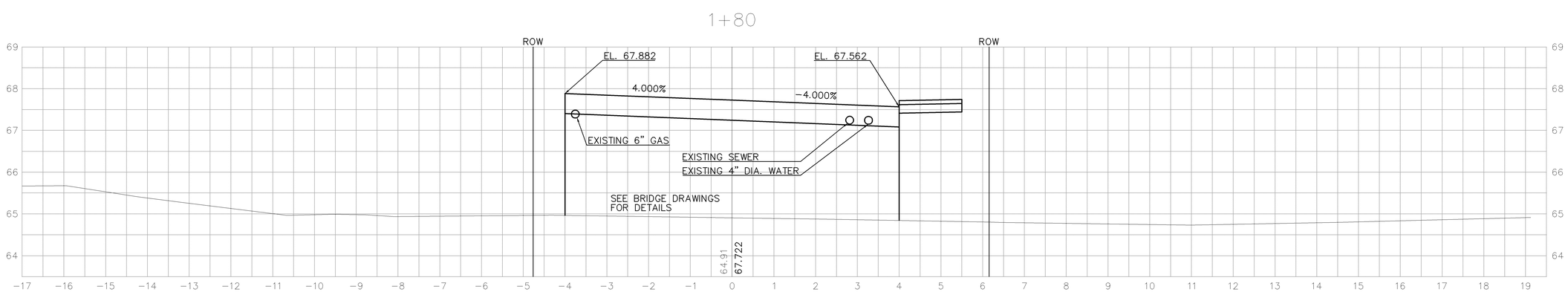

CROSS-SECTIONS –
PRELIMINARY
PLOTTED BY _____ DATE _____ 20__
CHECKED BY _____ DATE _____ 20__
NOTE BOOK NO. _____ PAGE _____
TEMPLATES
PLOTTED BY _____ DATE _____ 20__
CHECKED BY _____ DATE _____ 20__
CALC. BOOK NO. _____ PAGE _____

HORIZONTAL SCALE 1:50
VERTICAL SCALE 1:50

MARLBOROUGH
BOUNDARY STREET OVER ASSABET RIVER

STATE	FED. AID PROJ. NO.	FISCAL YEAR	SHEET NO.	TOTAL SHEETS
MASS	NFA	2008		
PROJECT FILE NO. 603506				

CROSS SECTIONS
ALTERNATIVE I

SUPERELEVATION NOTES:

STA 1+20 – MATCH EXISTING PAVEMENT. (APPROXIMATELY 0.157% LEFT, 2.820% RIGHT)
STA 1+20 – STA 1+37.753 – TRANSITION TO INTERMEDIATE SUPERELEVATION (2.820%)
STA 1+37.753 – STA 1+45.62 – TRANSITION TO FULL SUPERELEVATION (4.0%)
STA 1+45.62 – STA 2+16.113 – MAINTAIN FULL SUPERELEVATION (4.0%)
STA 2+16.113 – STA 2+31.78 – TRANSITION TO INTERMEDIATE SUPERELEVATION (1.650%).
STA 2+31.78 – STA 2+40 – TRANSITION TO MATCH EXISTING PAVEMENT (APPROXIMATELY 1.650% LEFT, .417% RIGHT)

2+40

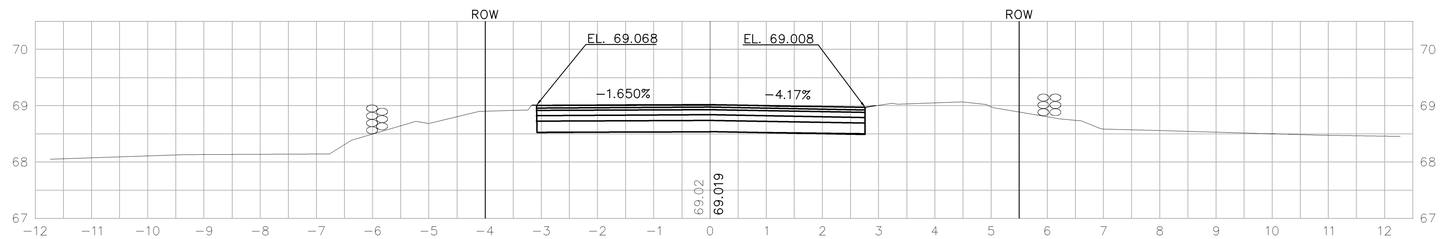

CUT: 2.86 SM
FILL: 0 SM

2+30

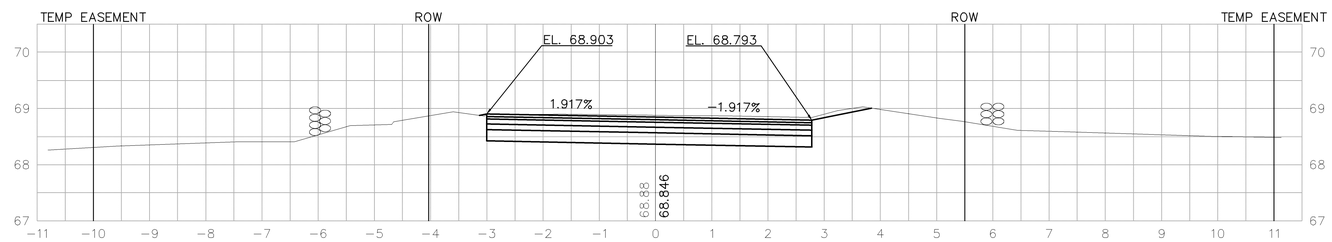

CUT: 2.942 SM
FILL: 0.003 SM

P.C. STA. = 1=35.000
R = 400.00'
P.T. = STA. 2+32.710

2+20

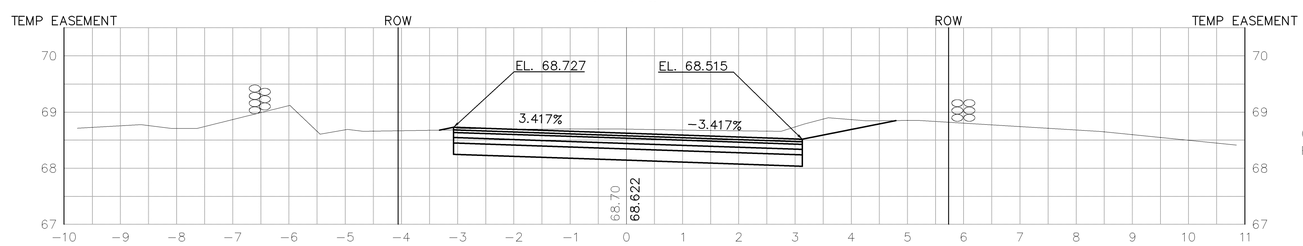

CUT: 3.642 SM
FILL: 0.015 SM

2+10

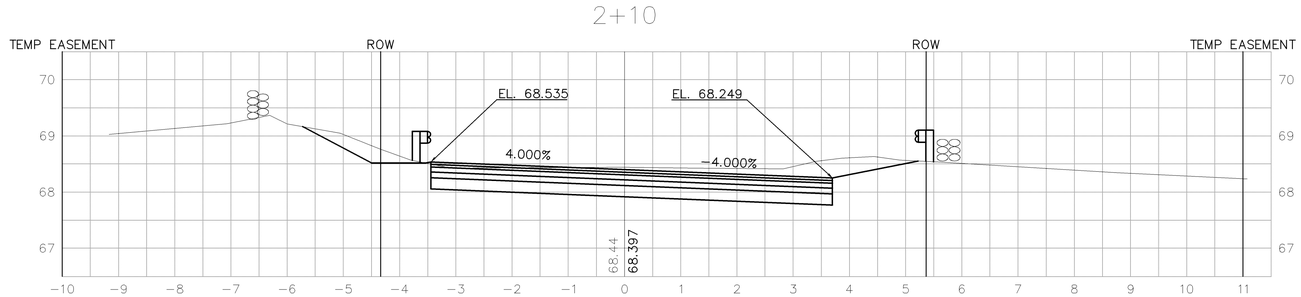

CUT: 5.203 SM
FILL: 0.127 SM

HORIZONTAL SCALE 1:50
VERTICAL SCALE 1:50

CROSS–SECTIONS – _____
PRELIMINARY
PLOTTED BY _____ DATE _____ 20___
CHECKED BY _____ DATE _____ 20___
NOTE BOOK NO. _____ PAGE _____
TEMPLATES
PLOTTED BY _____ DATE _____ 20___
CHECKED BY _____ DATE _____ 20___
CALC. BOOK NO. _____ PAGE _____

MARLBOROUGH
BOUNDARY STREET OVER ASSABET RIVER

STATE	FED. AID PROJ. NO.	FISCAL YEAR	SHEET NO.	TOTAL SHEETS
MASS	NFA	2008		
PROJECT FILE NO. 603506				

CROSS SECTIONS
ALTERNATIVE II

CROSS-SECTIONS - _____
PRELIMINARY
PLOTTED BY _____ DATE _____20____
CHECKED BY _____ DATE _____20____
NOTE BOOK NO. _____PAGE _____
TEMPLATES
PLOTTED BY _____ DATE _____20____
CHECKED BY _____ DATE _____20____
CALC. BOOK NO. _____PAGE _____

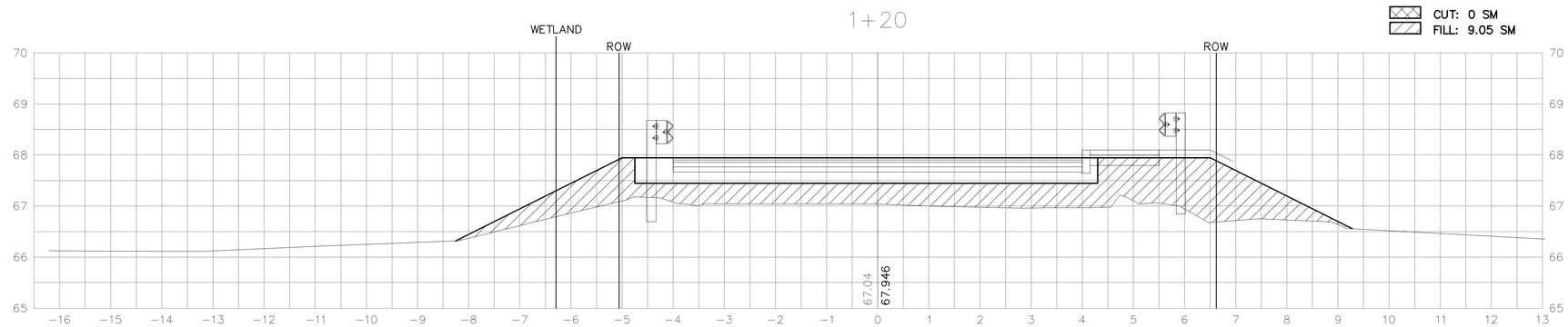

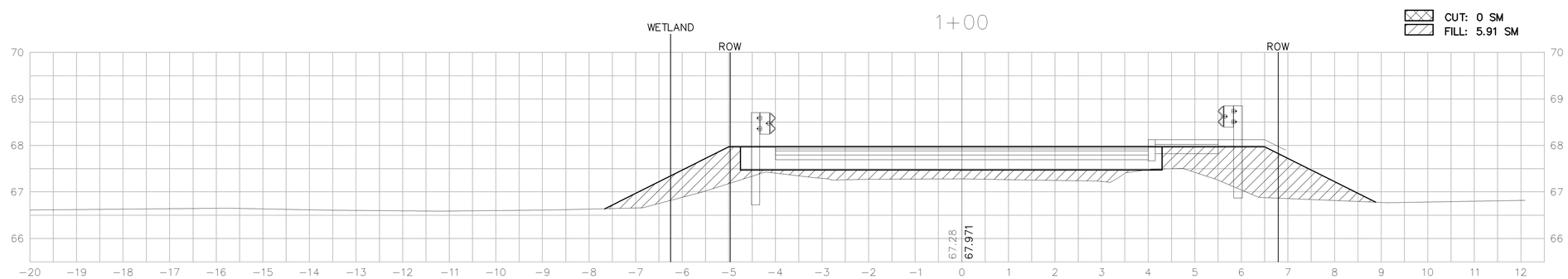

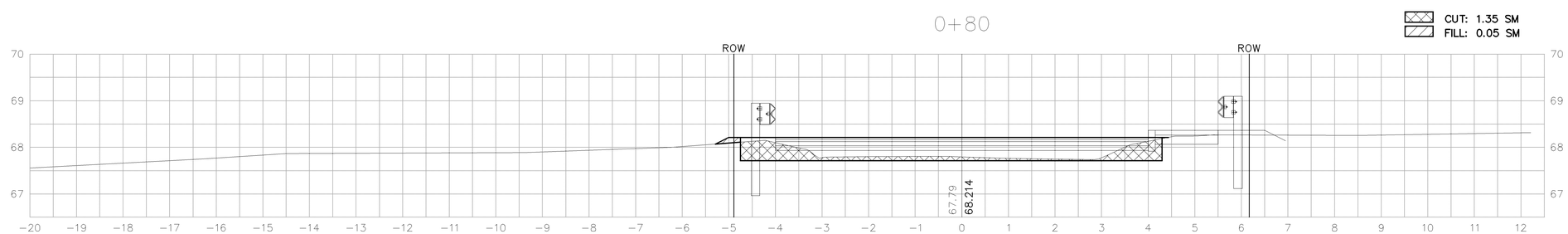

HORIZONTAL SCALE 1:50
VERTICAL SCALE 1:50

MARLBOROUGH
BOUNDARY STREET OVER ASSABET RIVER

STATE	FED. AID PROJ. NO.	FISCAL YEAR	SHEET NO.	TOTAL SHEETS
MASS	NFA	2008		
PROJECT FILE NO. 603506				

CROSS SECTIONS
ALTERNATIVE II

CROSS-SECTIONS – _____
PRELIMINARY
PLOTTED BY _____ DATE _____20____
CHECKED BY _____ DATE _____20____
NOTE BOOK NO. _____PAGE _____
TEMPLATES
PLOTTED BY _____ DATE _____20____
CHECKED BY _____ DATE _____20____
CALC. BOOK NO. _____PAGE _____

1+60

CUT: 0 SM
FILL: 10.46 SM

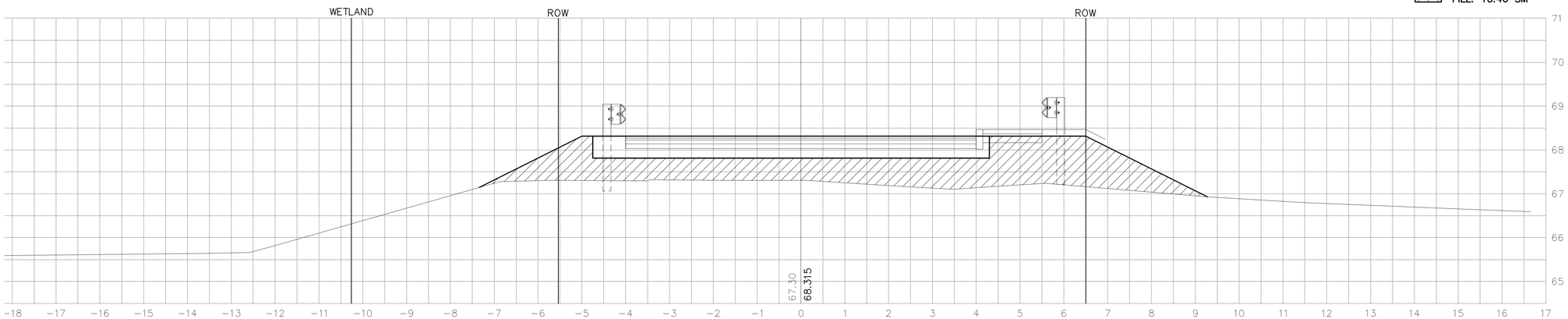

1+40

CUT: 0 SM
FILL: 11.41 SM

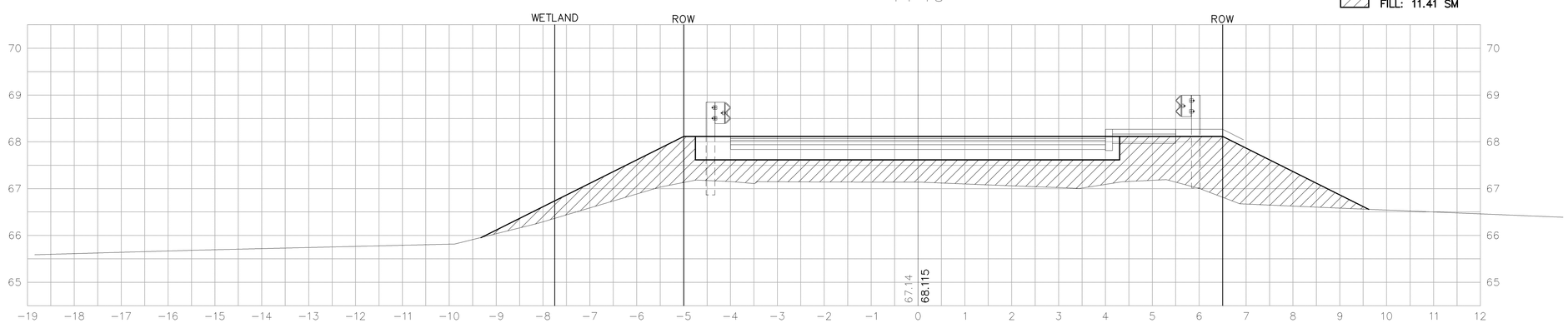

HORIZONTAL SCALE 1:50
VERTICAL SCALE 1:50

MARLBOROUGH
BOUNDARY STREET OVER ASSABET RIVER

STATE	FED. AID PROJ. NO.	FISCAL YEAR	SHEET NO.	TOTAL SHEETS
MASS	NFA	2008		
PROJECT FILE NO. 603506				

CROSS SECTIONS
ALTERNATIVE II

CROSS-SECTIONS – _____
PRELIMINARY
PLOTTED BY _____ DATE _____ 20___
CHECKED BY _____ DATE _____ 20___
NOTE BOOK NO. _____ PAGE _____
TEMPLATES
PLOTTED BY _____ DATE _____ 20___
CHECKED BY _____ DATE _____ 20___
CALC. BOOK NO. _____ PAGE _____

2+20

CUT: 2.63 SM
FILL: 0.35 SM

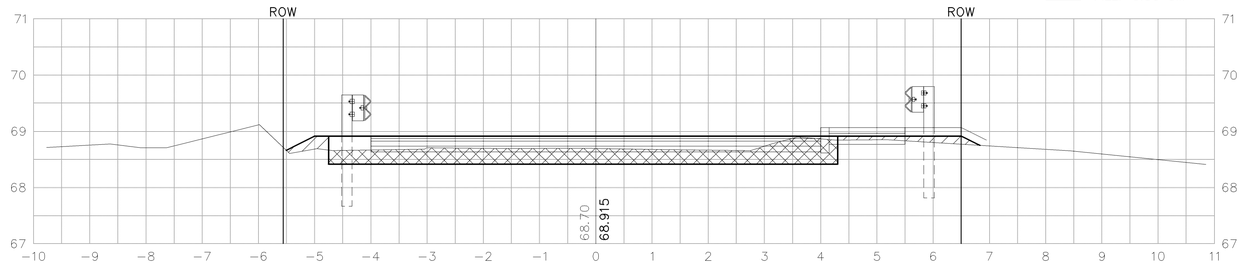

2+00

CUT: 0.98 SM
FILL: 2.18 SM

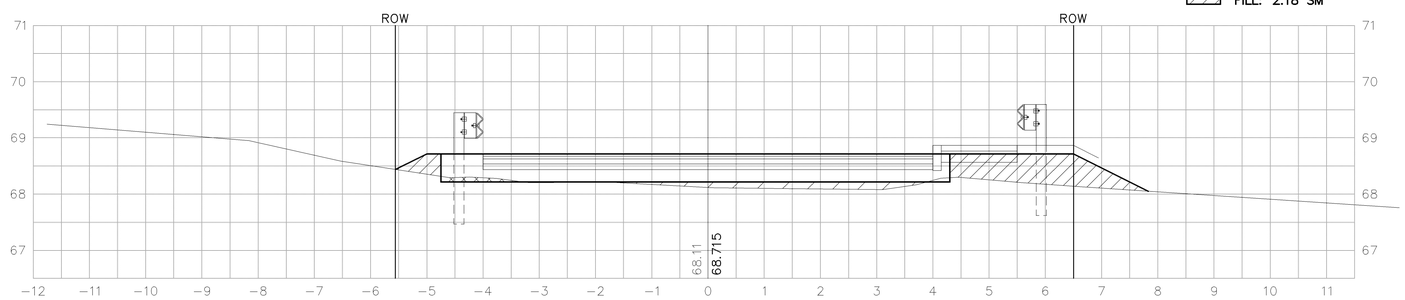

1+80

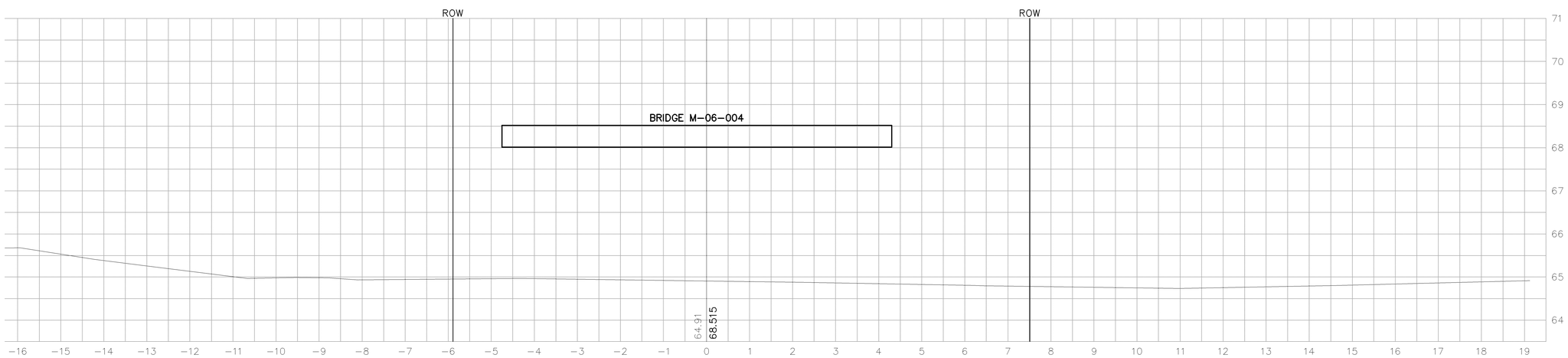

HORIZONTAL SCALE 1:50
VERTICAL SCALE 1:50

MARLBOROUGH
BOUNDARY STREET OVER ASSABET RIVER

STATE	FED. AID PROJ. NO.	FISCAL YEAR	SHEET NO.	TOTAL SHEETS
MASS	NFA	2008		
PROJECT FILE NO. 603506				

CROSS SECTIONS
ALTERNATIVE II

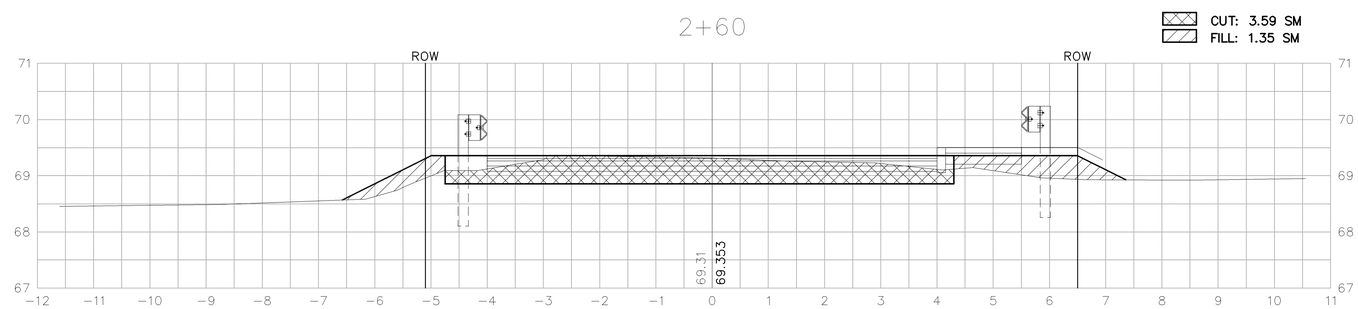

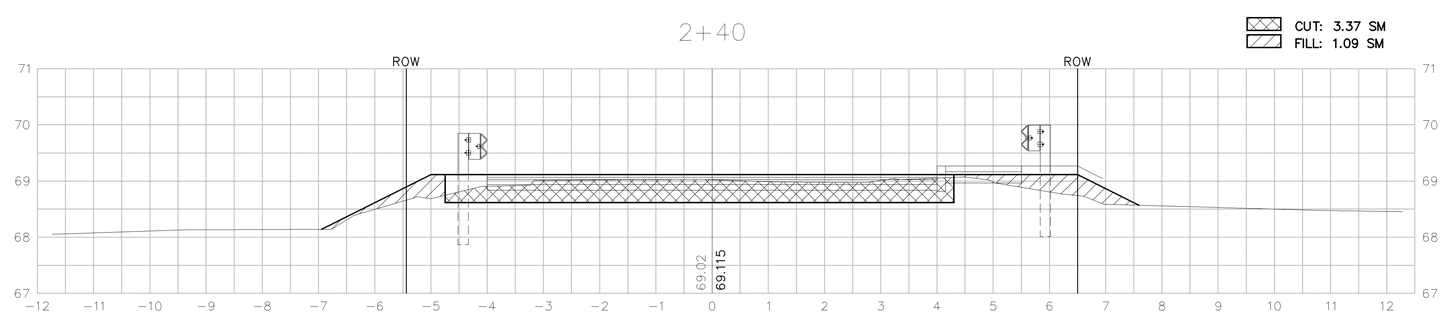

CROSS-SECTIONS – _____
PRELIMINARY
PLOTTED BY _____ DATE _____20____
CHECKED BY _____ DATE _____20____
NOTE BOOK NO. _____PAGE _____
TEMPLATES
PLOTTED BY _____ DATE _____20____
CHECKED BY _____ DATE _____20____
CALC. BOOK NO. _____PAGE _____

HORIZONTAL SCALE 1:50
VERTICAL SCALE 1:50

MARLBOROUGH
BOUNDARY STREET OVER ASSABET RIVER

STATE	FED. AID PROJ. NO.	FISCAL YEAR	SHEET NO.	TOTAL SHEETS
MASS	NFA	2008		
PROJECT FILE NO. 603506				

CROSS SECTIONS
ALTERNATIVE III

CUT: 0 SM
FILL: 44.74 SM

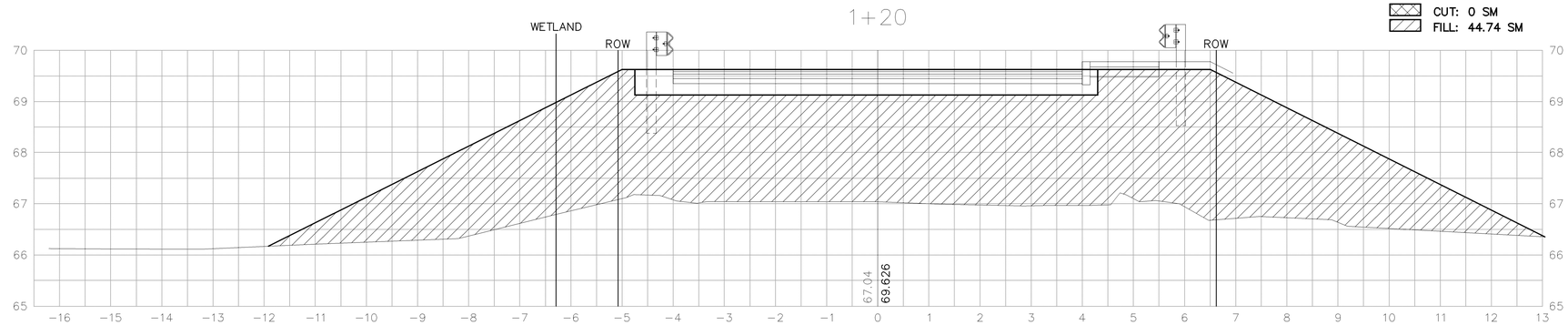

CUT: 0 SM
FILL: 33.66 SM

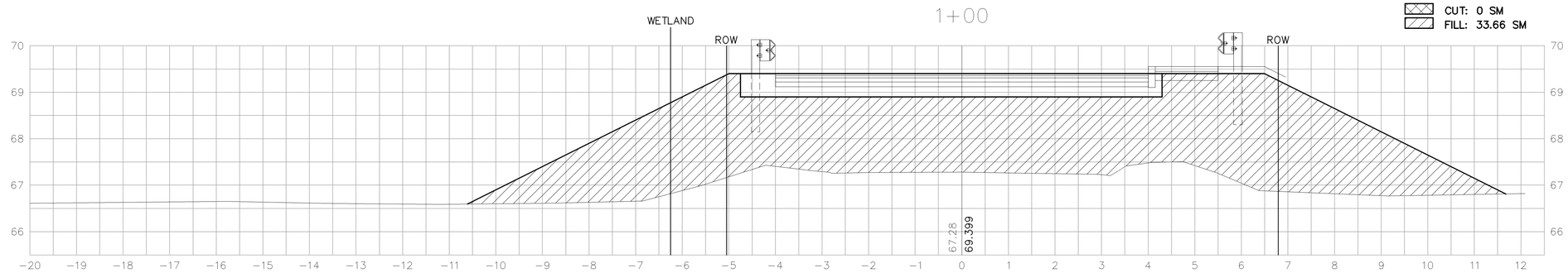

CUT: 0 SM
FILL: 15.25 SM

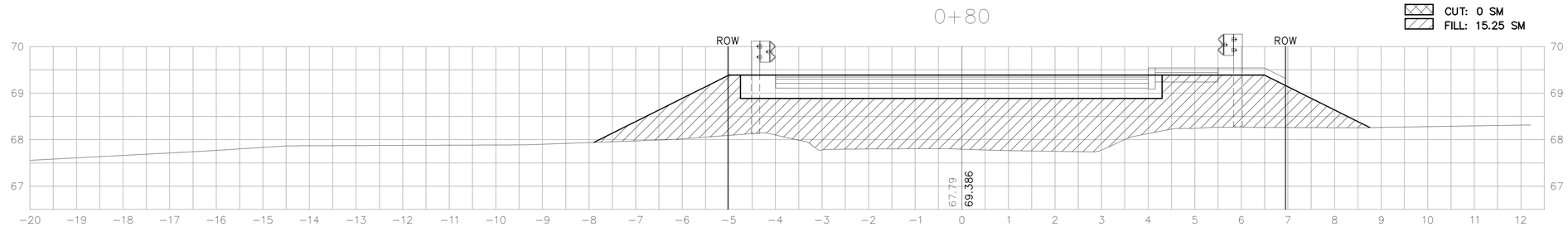

HORIZONTAL SCALE 1:50
VERTICAL SCALE 1:50

CROSS-SECTIONS - _____
PRELIMINARY
PLOTTED BY _____ DATE _____ 20___
CHECKED BY _____ DATE _____ 20___
NOTE BOOK NO. _____ PAGE _____
TEMPLATES
PLOTTED BY _____ DATE _____ 20___
CHECKED BY _____ DATE _____ 20___
CALC. BOOK NO. _____ PAGE _____

MARLBOROUGH
BOUNDARY STREET OVER ASSABET RIVER

STATE	FED. AID PROJ. NO.	FISCAL YEAR	SHEET NO.	TOTAL SHEETS
MASS	NFA	2008		
PROJECT FILE NO. 603506				

CROSS SECTIONS
ALTERNATIVE III

CROSS-SECTIONS – _____
PRELIMINARY
PLOTTED BY _____ DATE _____20____
CHECKED BY _____ DATE _____20____
NOTE BOOK NO. _____PAGE _____
TEMPLATES
PLOTTED BY _____ DATE _____20____
CHECKED BY _____ DATE _____20____
CALC. BOOK NO. _____PAGE _____

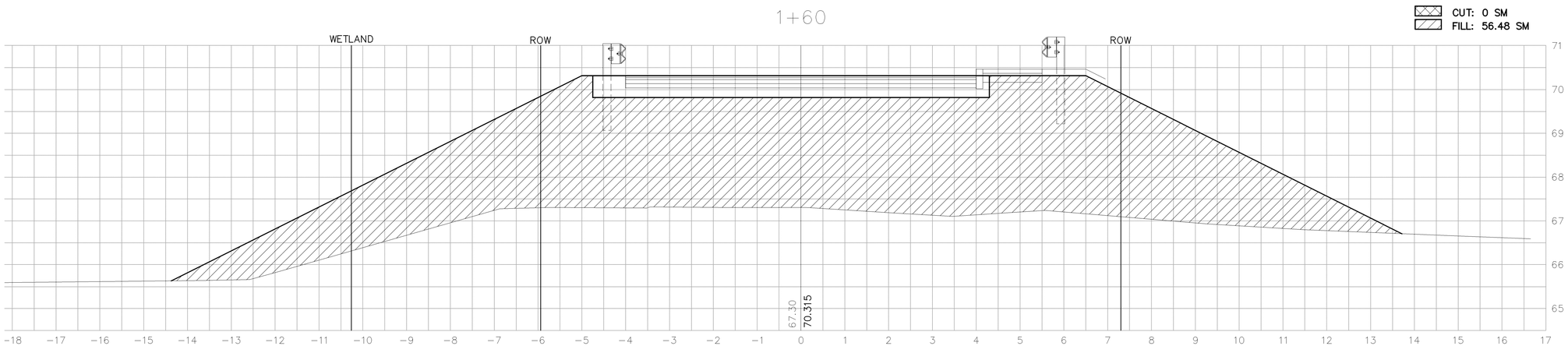

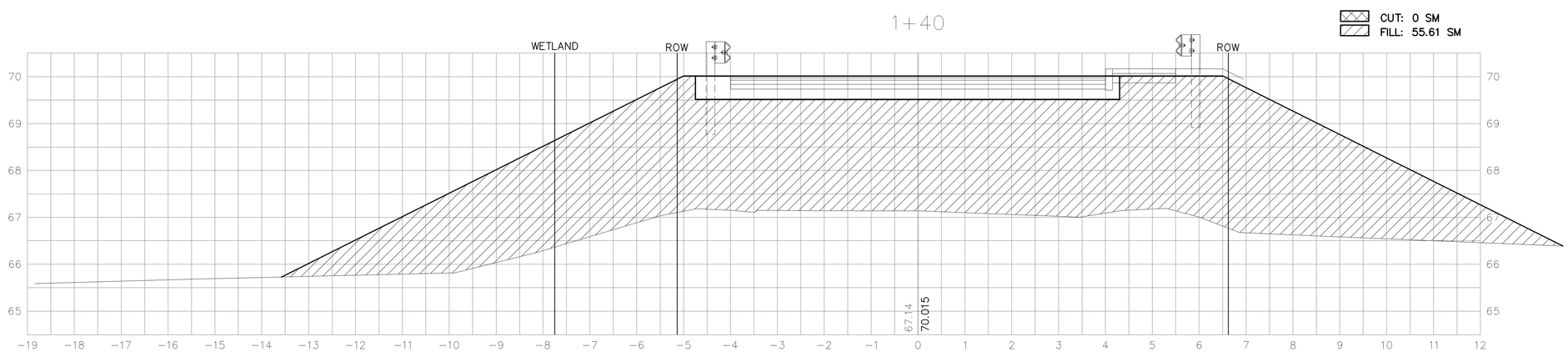

HORIZONTAL SCALE 1:50
VERTICAL SCALE 1:50

MARLBOROUGH
BOUNDARY STREET OVER ASSABET RIVER

STATE	FED. AID PROJ. NO.	FISCAL YEAR	SHEET NO.	TOTAL SHEETS
MASS	NFA	2008		
PROJECT FILE NO. 603506				

CROSS SECTIONS
ALTERNATIVE III

CROSS-SECTIONS – _____
PRELIMINARY
PLOTTED BY _____ DATE _____ 20___
CHECKED BY _____ DATE _____ 20___
NOTE BOOK NO. _____ PAGE _____
TEMPLATES
PLOTTED BY _____ DATE _____ 20___
CHECKED BY _____ DATE _____ 20___
CALC. BOOK NO. _____ PAGE _____

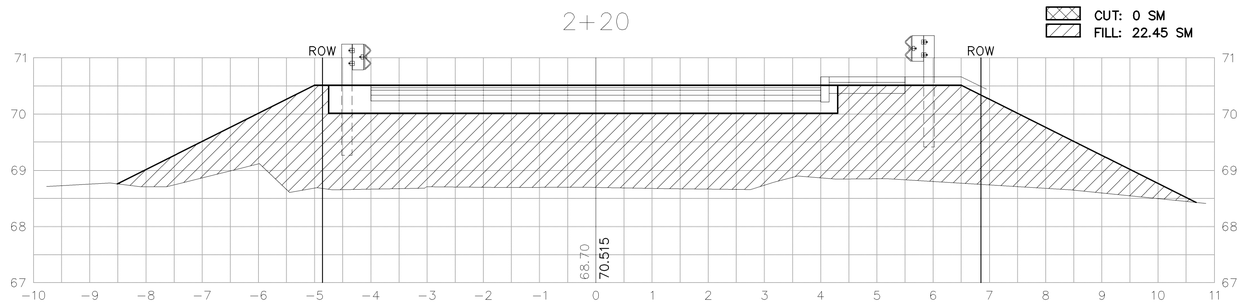

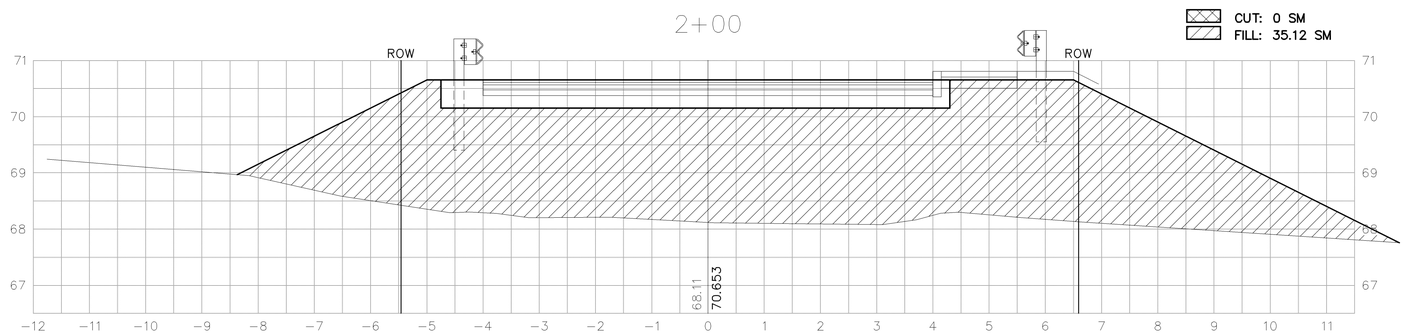

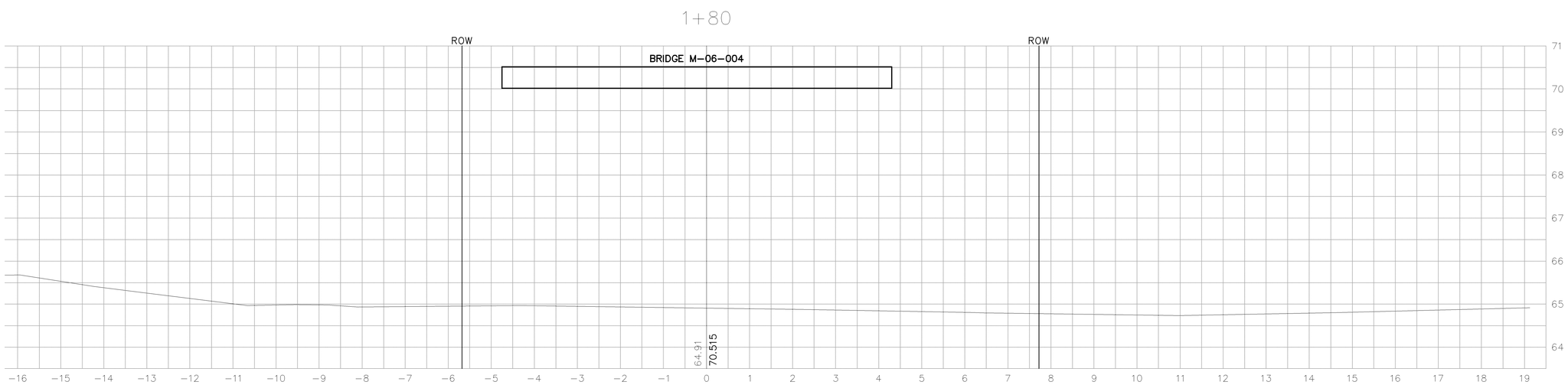

HORIZONTAL SCALE 1:50
VERTICAL SCALE 1:50

MARLBOROUGH
BOUNDARY STREET OVER ASSABET RIVER

STATE	FED. AID PROJ. NO.	FISCAL YEAR	SHEET NO.	TOTAL SHEETS
MASS	NFA	2008		
PROJECT FILE NO. 603506				

CROSS SECTIONS
ALTERNATIVE III

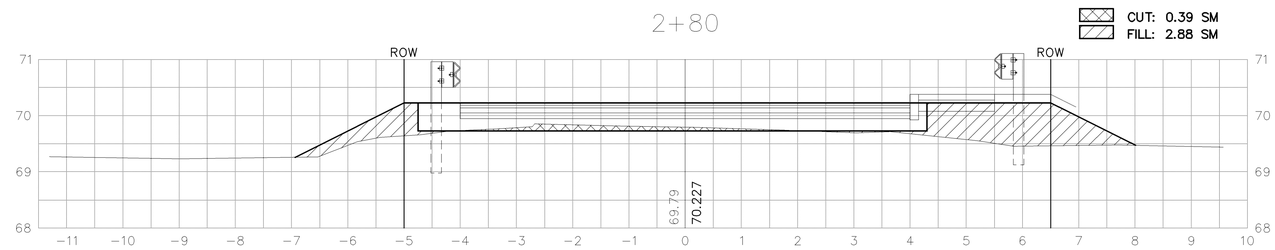

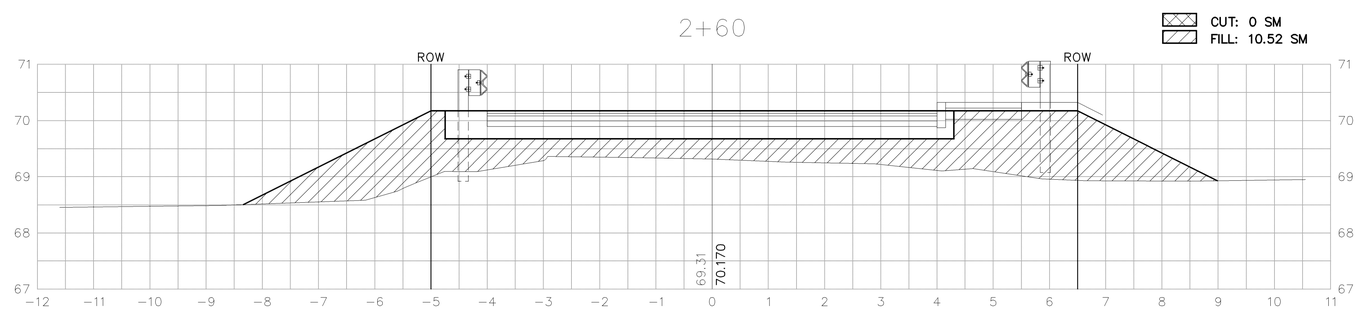

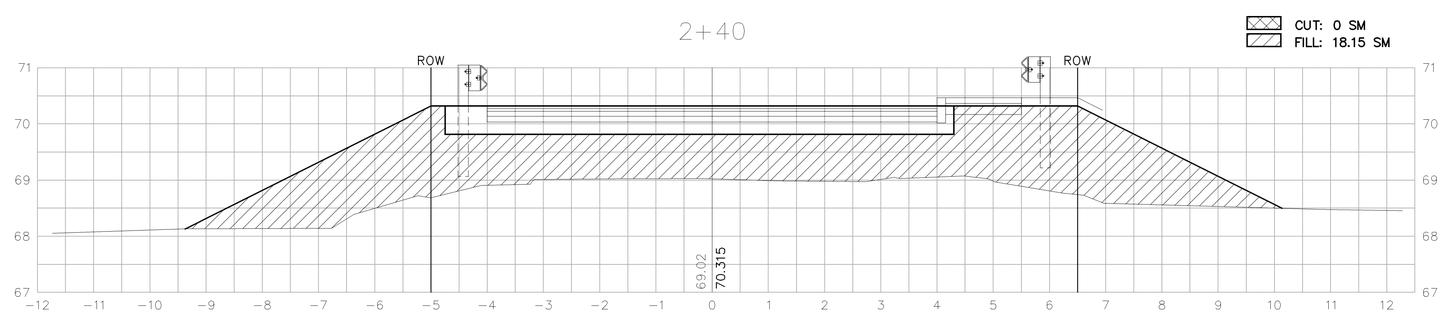

CROSS-SECTIONS – _____
PRELIMINARY

PLOTTED BY _____ DATE _____ 20___
CHECKED BY _____ DATE _____ 20___
NOTE BOOK NO. _____ PAGE _____

TEMPLATES

PLOTTED BY _____ DATE _____ 20___
CHECKED BY _____ DATE _____ 20___
CALC. BOOK NO. _____ PAGE _____

HORIZONTAL SCALE 1:50
VERTICAL SCALE 1:50

MARLBOROUGH
BOUNDARY STREET OVER ASSABET RIVER

STATE	FED. AID PROJ. NO.	FISCAL YEAR	SHEET NO.	TOTAL SHEETS
MASS	NFA	2008		
PROJECT FILE NO. 603506				

CROSS SECTIONS
ALTERNATIVE IV

CROSS-SECTIONS – _____
PRELIMINARY
PLOTTED BY _____ DATE _____ 20___
CHECKED BY _____ DATE _____ 20___
NOTE BOOK NO. _____ PAGE _____
TEMPLATES
PLOTTED BY _____ DATE _____ 20___
CHECKED BY _____ DATE _____ 20___
CALC. BOOK NO. _____ PAGE _____

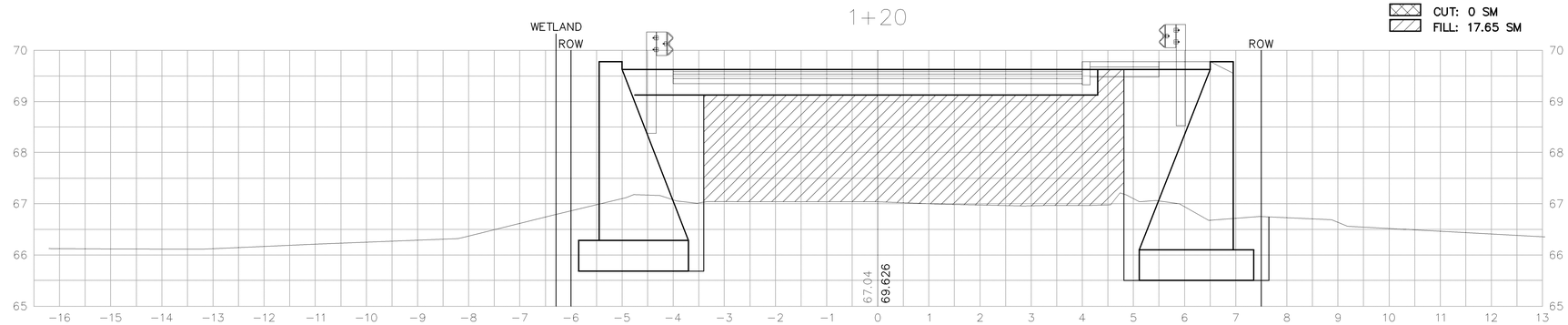

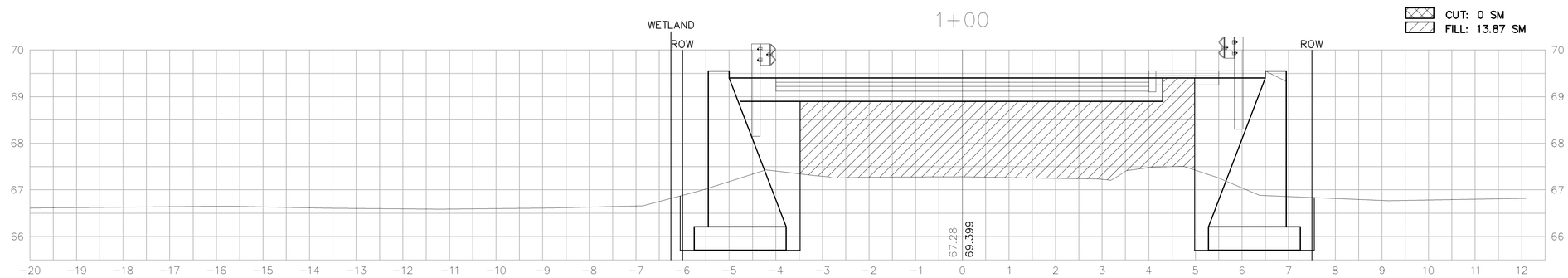

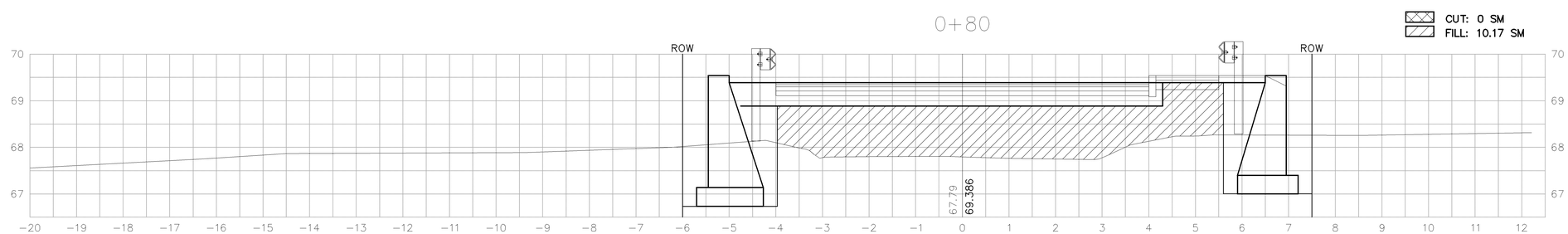

HORIZONTAL SCALE 1:50
VERTICAL SCALE 1:50

MARLBOROUGH
BOUNDARY STREET OVER ASSABET RIVER

STATE	FED. AID PROJ. NO.	FISCAL YEAR	SHEET NO.	TOTAL SHEETS
MASS	NFA	2008		
PROJECT FILE NO. 603506				

CROSS SECTIONS
ALTERNATIVE IV

CROSS-SECTIONS – _____
PRELIMINARY
PLOTTED BY _____ DATE _____20____
CHECKED BY _____ DATE _____20____
NOTE BOOK NO. _____PAGE _____
TEMPLATES
PLOTTED BY _____ DATE _____20____
CHECKED BY _____ DATE _____20____
CALC. BOOK NO. _____PAGE _____

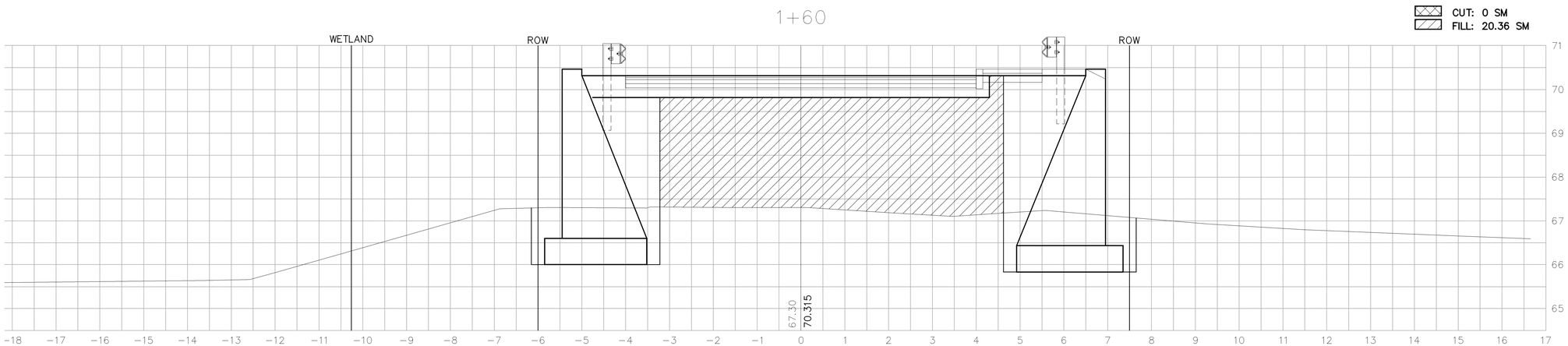

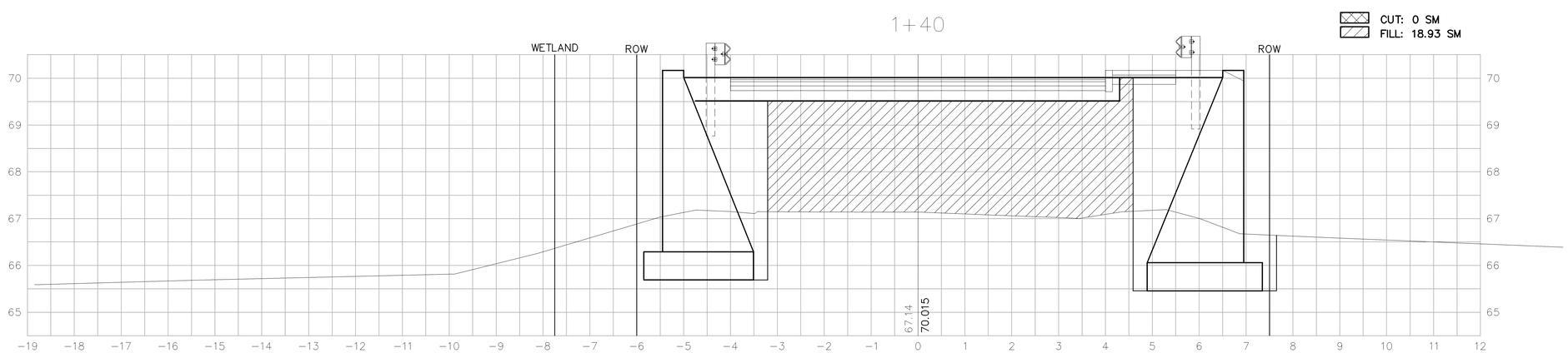

HORIZONTAL SCALE 1:50
VERTICAL SCALE 1:50

MARLBOROUGH
BOUNDARY STREET OVER ASSABET RIVER

STATE	FED. AID PROJ. NO.	FISCAL YEAR	SHEET NO.	TOTAL SHEETS
MASS	NFA	2008		
PROJECT FILE NO. 603506				

CROSS SECTIONS
ALTERNATIVE IV

CROSS-SECTIONS – _____
PRELIMINARY
PLOTTED BY _____ DATE _____ 20___
CHECKED BY _____ DATE _____ 20___
NOTE BOOK NO. _____ PAGE _____
TEMPLATES
PLOTTED BY _____ DATE _____ 20___
CHECKED BY _____ DATE _____ 20___
CALC. BOOK NO. _____ PAGE _____

2+20

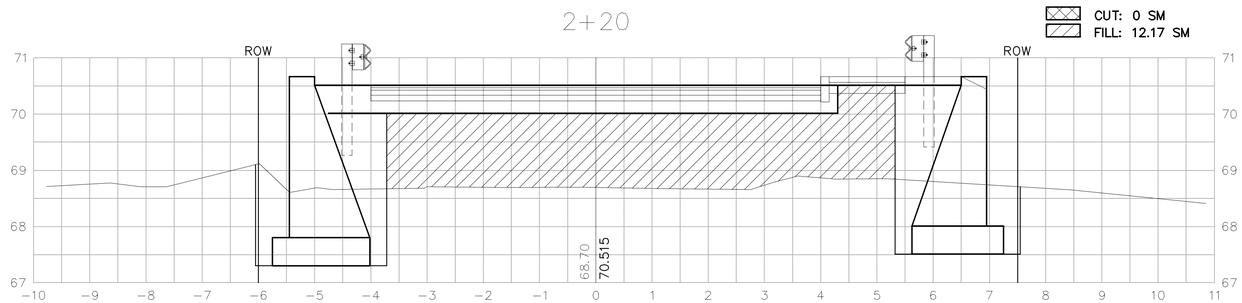

2+00

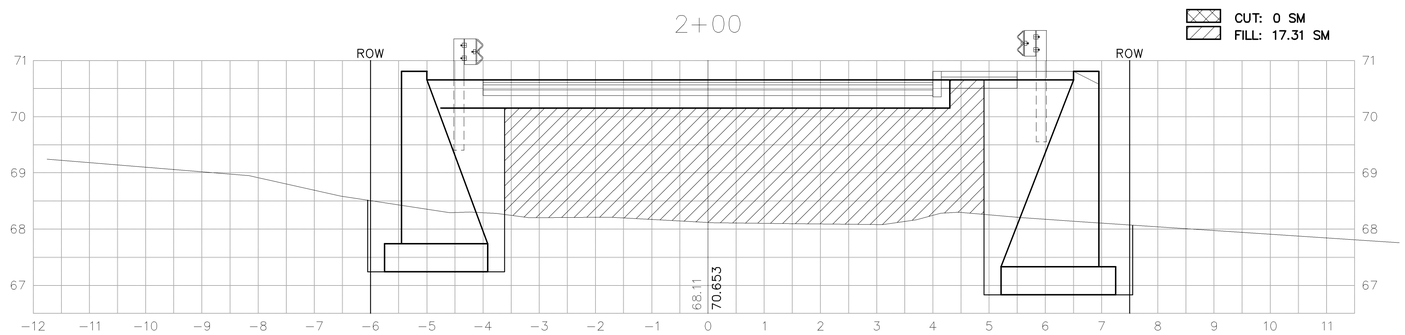

1+80

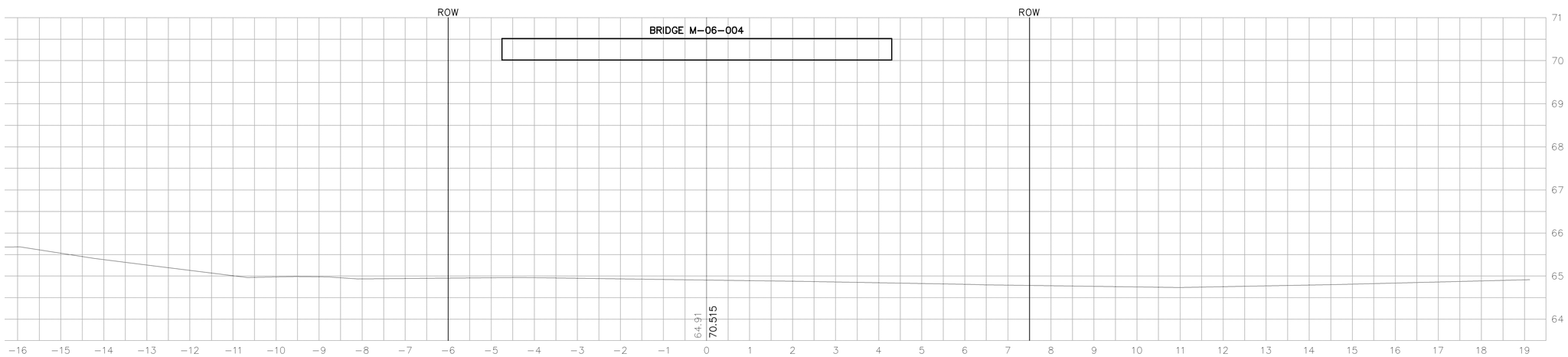

HORIZONTAL SCALE 1:50
VERTICAL SCALE 1:50

MARLBOROUGH
BOUNDARY STREET OVER ASSABET RIVER

STATE	FED. AID PROJ. NO.	FISCAL YEAR	SHEET NO.	TOTAL SHEETS
MASS	NFA	2008		
PROJECT FILE NO. 603506				

CROSS SECTIONS
ALTERNATIVE IV

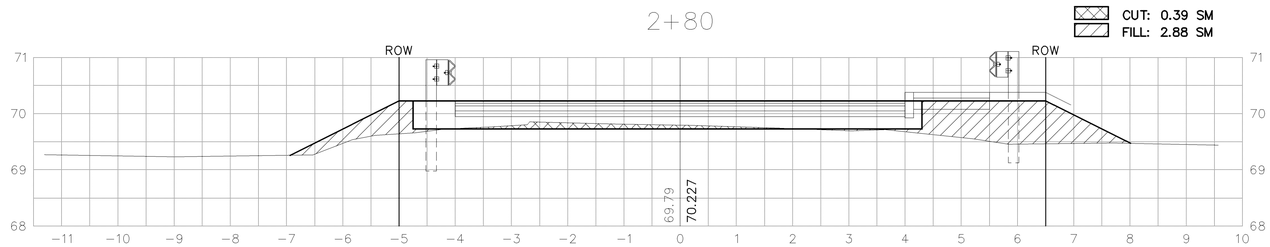

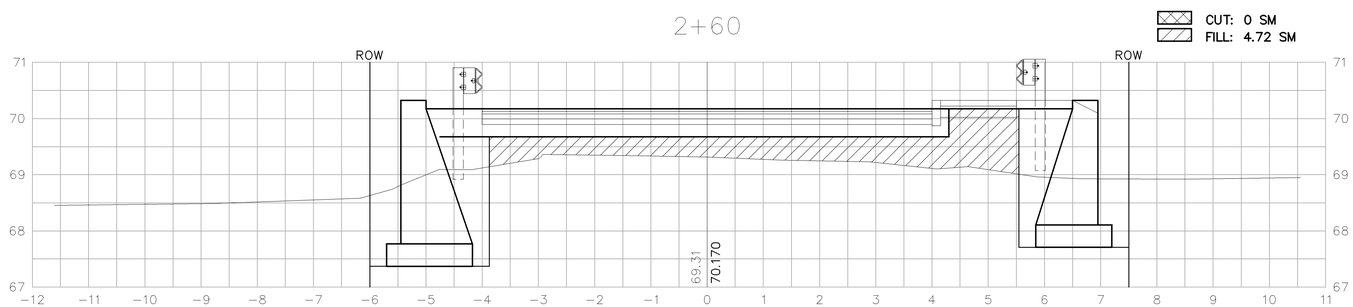

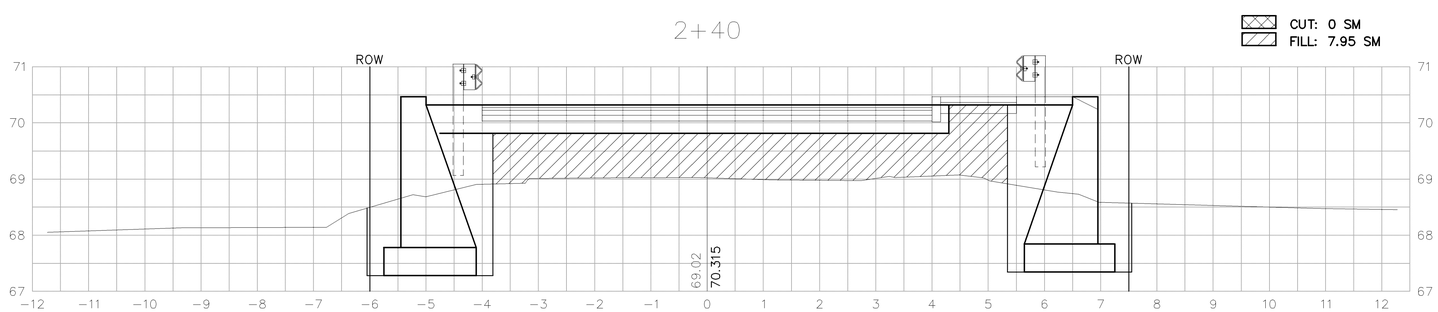

CROSS-SECTIONS – _____
PRELIMINARY
PLOTTED BY _____ DATE _____ 20___
CHECKED BY _____ DATE _____ 20___
NOTE BOOK NO. _____ PAGE _____
TEMPLATES
PLOTTED BY _____ DATE _____ 20___
CHECKED BY _____ DATE _____ 20___
CALC. BOOK NO. _____ PAGE _____

HORIZONTAL SCALE 1:50
VERTICAL SCALE 1:50