PUBLIC NOTICE

US Army Corps of Engineers®
New England District

696 Virginia Road
Concord, MA 01742-2751

Date: March 3, 2009
Comment Period Ends: April 2, 2009
File Number: NAE-2008-02247
In Reply Refer To: Richard Kristoff
Or by e-mail: Richard.C.Kristoff@usace.army.mil

The District Engineer has received a permit application from the applicant below to **conduct work in waters of the United States** as described below.

APPLICANT
Hyannis Building & Developing Association, Inc.
1 South Street
Hyannis, Massachusetts 02601

ACTIVITY
It is proposed to dredge the area as shown on the plan "HYANNIS BUILDING & DEVELOPING ASSOCIATES INC." on sheet 3 of 4 and dated "JANUARY 26, 2009" to -5 MLW for the majority of the site and to -6.0 MLW towards the seaward end. The maximum volume of material that will be removed is 1,900 cubic yards. In square footage the dredging will total 20,500 square feet with a 8,700 square feet being maintenance dredging. The material will be offloaded at the Baxter Boat House parking area and then trucked to the Town of Barnstable Rifle Range. Also, it is proposed to reconfigure the existing marina by extending the main pier by installing a 4 foot x 145 float and removing the existing pier to the eastern side of the main pier. Furthermore, off of the main pier will be two 4 foot x 14 foot finger floats, four 4 foot x 21 foot finger floats, and eight 4 foot x 24 foot finger floats. A 4 foot x 16 foot gangway, with a 6 foot by 16 foot float, will be constructed leading down to the main pier. All structures will be pile supported. Lastly, the applicant is applying for a reconfiguration zone for the whole foot print of the facility. There is no mitigation proposed at this time.

The work is described on the enclosed plans entitled "HYANNIS BUILDING & DEVELOPING ASSOCIATES INC.," on 5 sheets, dated "SEPTEMBER 6, 2006" and "FEBRUARY 20, 2009."

WATERWAY AND LOCATION OF THE PROPOSED WORK
This work is proposed in Hyannis Inner Harbor at 1 South Street, Hyannis, Massachusetts. The proposed location on the USGS Hyannis quadrangle sheet is at UTM coordinates 239674.82 N and 934554.76 E towards the most seaward side, 239771.11 N and 934488.08 E at the eastern side of the site, and 239706.72 N and 934610.74 E at the western side of the site

AUTHORITY
Permits are required pursuant to:
__X_ Section 10 of the Rivers and Harbors Act of 1899
____ Section 404 of the Clean Water Act
_____ Section 103 of the Marine Protection, Research and Sanctuaries Act).

The decision whether to issue a permit will be based on an evaluation of the probable impact of the proposed activity on the public interest. That decision will reflect the national concern for both protection and utilization of important resources. The benefit which may reasonably accrue from the proposal must be balanced against its reasonably foreseeable detriments. All factors which may be relevant to the proposal will be considered, including the cumulative effects thereof; among those are: conservation, economics, aesthetics, general environmental concerns, wetlands, cultural value, fish and wildlife values, flood hazards, flood plain value, land use, navigation, shoreline erosion and accretion, recreation, water supply and conservation, water quality, energy needs, safety, food production and, in general, the needs and welfare of the people.

The Corps of Engineers is soliciting comments from the public; Federal, state, and local agencies and officials; Indian Tribes; and other interested parties in order to consider and evaluate the impacts of this proposed activity. Any comments received will be considered by the Corps of Engineers to determine whether to issue, modify, condition or deny a permit for this proposal. To make this decision, comments are used to assess impacts on endangered species, historic properties, water quality, general environmental effects, and the other public interest factors listed above. Comments are used in the preparation of an Environmental Assessment and/or an Environmental Impact Statement pursuant to the National Environmental Policy Act. Comments are also used to determine the need for a public hearing and to determine the overall public interest of the proposed activity.

Where the activity involves the discharge of dredged or fill material into waters of the United States or the transportation of dredged material for the purpose of disposing it in ocean waters, the evaluation of the impact of the activity in the public interest will also include application of the guidelines promulgated by the Administrator, U.S Environmental Protection Agency, under authority of Section 404(b) of the Clean Water Act, and/or Section 103 of the Marine Protection Research and Sanctuaries Act of 1972 as amended.

ESSENTIAL FISH HABITAT

The Magnuson-Stevens Fishery Conservation and Management Act, as amended by the Sustainable Fisheries Act of 1996 (Public Law 104-267), requires all federal agencies to consult with the National Marine Fisheries Service on all actions, or proposed actions, permitted, funded, or undertaken by the agency, that may adversely affect Essential Fish Habitat (EFH).

The dredging portion of this project will impact approximately 20,500 SF of Essential Fish Habitat. Habitat at this site can be described as sand and silt. Loss of this habitat may adversely affect Atlantic cod (adults), winter flounder (eggs, larvae, juveniles, adults), windowpane flounder (adults), long finned squid (juveniles, adults) Atlantic butterfish (eggs, larvae, juveniles, adults), Atlantic mackerel (eggs, larvae, juveniles, adults), summer flounder (eggs, larvae, juveniles, adults), scup (juveniles, adults), black sea bass (larvae, juveniles, adults), surf clam (juveniles, adults), king mackerel (eggs, larvae, juveniles, adults), Spanish mackerel (eggs, larvae, juveniles, adults), and Cobia (eggs, larvae, juveniles, adults). However the District Engineer has made a preliminary determination that the site-specific adverse effect will not be substantial. Further consultation with the National Marine Fisheries Service regarding EFH conservation recommendations is being conducted and will be concluded prior to the final decision.

SECTION 106 COORDINATION
Based on his initial review, the District Engineer has determined that little likelihood exists for the proposed work to impinge upon properties with cultural or Native American significance, or listed in, or eligible for listing in, the National Register of Historic Places. Therefore, no further consideration of the requirements of Section 106 of the National Historic Preservation Act of 1966, as amended, is necessary. This determination is based upon one or more of the following:

a. The permit area has been extensively modified by previous work.
b. The permit area has been recently created.
c. The proposed activity is of limited nature and scope.
d. Review of the latest published version of the National Register shows that no presence of registered properties listed as being eligible for inclusion therein are in the permit area or general vicinity.
e. Coordination with the State Historic Preservation Officer and/or Tribal Historic Preservation Officer(s)

The States of Connecticut, Maine, Massachusetts, New Hampshire and Rhode Island have approved **Coastal Zone Management Programs**. Where applicable the applicant states that any proposed activity will comply with and will be conducted in a manner that is consistent with the approved Coastal Zone Management Program. By this Public Notice, we are requesting the State concurrence or objection to the applicant's consistency statement.

The following authorizations have been applied for, or have been, or will be obtained:

(X) Permit, License or Assent from State.
(X) Permit from Local Wetland Agency or Conservation Commission.
( ) Water Quality Certification in accordance with Section 401 of the Clean Water Act.

In order to properly evaluate the proposal, we are seeking public comment. Anyone wishing to comment is encouraged to do so. **Comments should be submitted in writing by the above date.** If you have any questions, please contact Richard Kristoff at (978) 318-8171, (800) 343-4789 or (800) 362-4367, if calling from within Massachusetts.

Any person may request, in writing, within the comment period specified in this notice, that a public hearing be held to consider the application. Requests for a public hearing shall specifically state the reasons for holding a public hearing. The Corps holds public hearings for the purpose of obtaining public comments when that is the best means for understanding a wide variety of concerns from a diverse segment of the public.

The initial determinations made herein will be reviewed in light of facts submitted in response to this notice. All comments will be considered a matter of public record. Copies of letters of objection will be forwarded to the applicant who will normally be requested to contact objectors directly in an effort to reach an understanding.

For more information on the New England District Corps of Engineers programs, visit our website at http://www.nae.usace.army.mil.

CENAE-R
FILE NO. NAE-2008-02247

THIS NOTICE IS NOT AN AUTHORIZATION TO DO ANY WORK.

Karen Kirk Adams
Chief, Permits and Enforcement Branch
Regulatory Division

If you would prefer not to continue receiving Public Notices, please contact Ms. Tina Chaisson at (978) 318-8058 or e-mail her at bettina.m.chaisson@usace.army.mil. You may also check here ( ) and return this portion of the Public Notice to: Bettina Chaisson, Regulatory Division, U.S. Army Corps of Engineers, 696 Virginia Road, Concord, MA 01742-2751.

NAME: _____
ADDRESS: _____

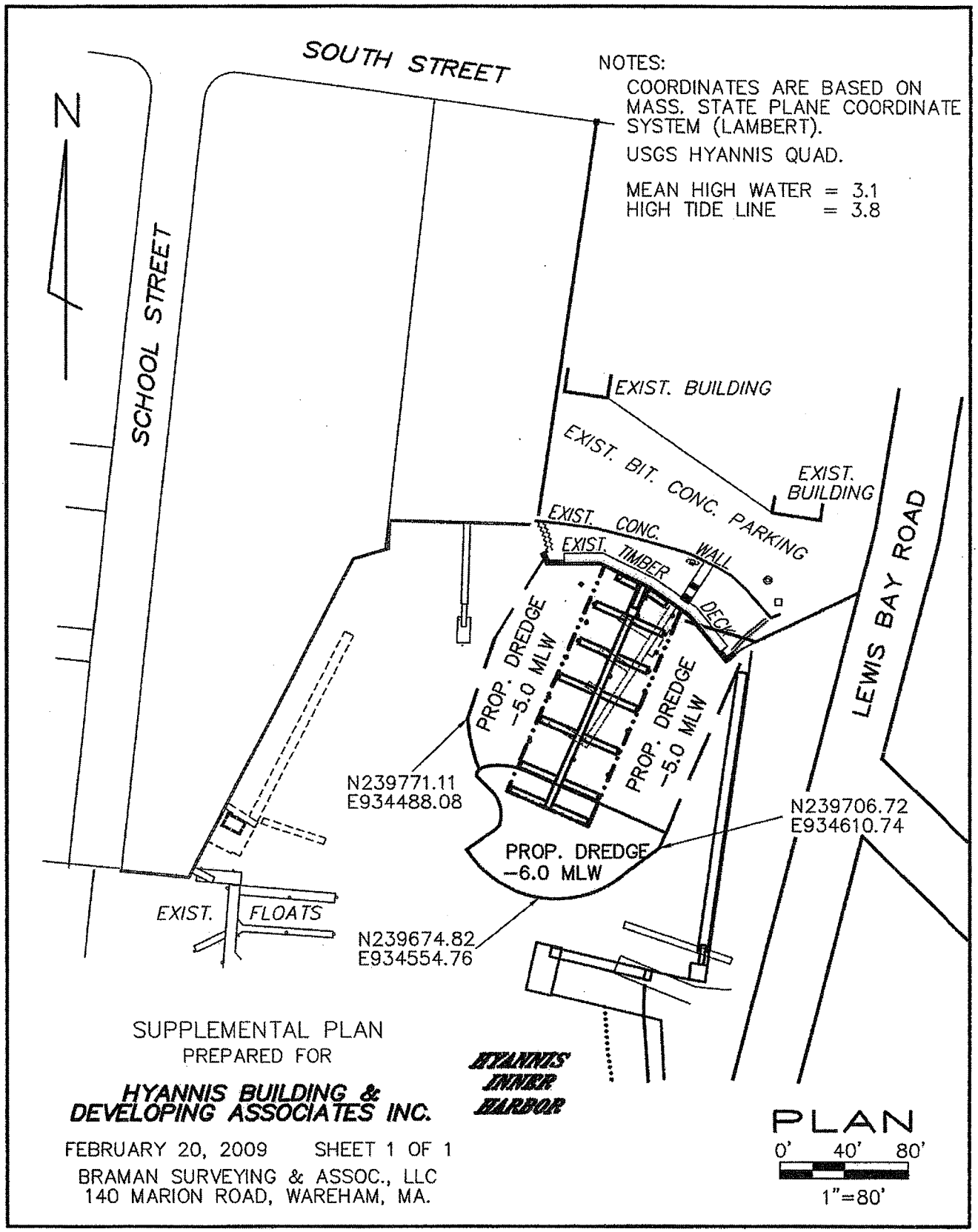
SOUTH STREET
NOTES:
COORDINATES ARE BASED ON MASS. STATE PLANE COORDINATE SYSTEM (LAMBERT).
USGS HYANNIS QUAD.
MEAN HIGH WATER = 3.1
HIGH TIDE LINE = 3.8
N
SCHOOL STREET
EXIST. BUILDING
EXIST. BIT. CONC. PARKING
EXIST. BUILDING
EXIST. CONC. WALL
EXIST. TIMBER DECK
LEWIS BAY ROAD
PROP. DREDGE -5.0 MLW
PROP. DREDGE -5.0 MLW
N239771.11
E934488.08
N239706.72
E934610.74
PROP. DREDGE -6.0 MLW
EXIST. FLOATS
N239674.82
E934554.76
SUPPLEMENTAL PLAN
PREPARED FOR
HYANNIS BUILDING & DEVELOPING ASSOCIATES INC.
HYANNIS INNER HARBOR
FEBRUARY 20, 2009 SHEET 1 OF 1
BRAMAN SURVEYING & ASSOC., LLC
140 MARION ROAD, WAREHAM, MA.
PLAN
0' 40' 80'
1"=80'

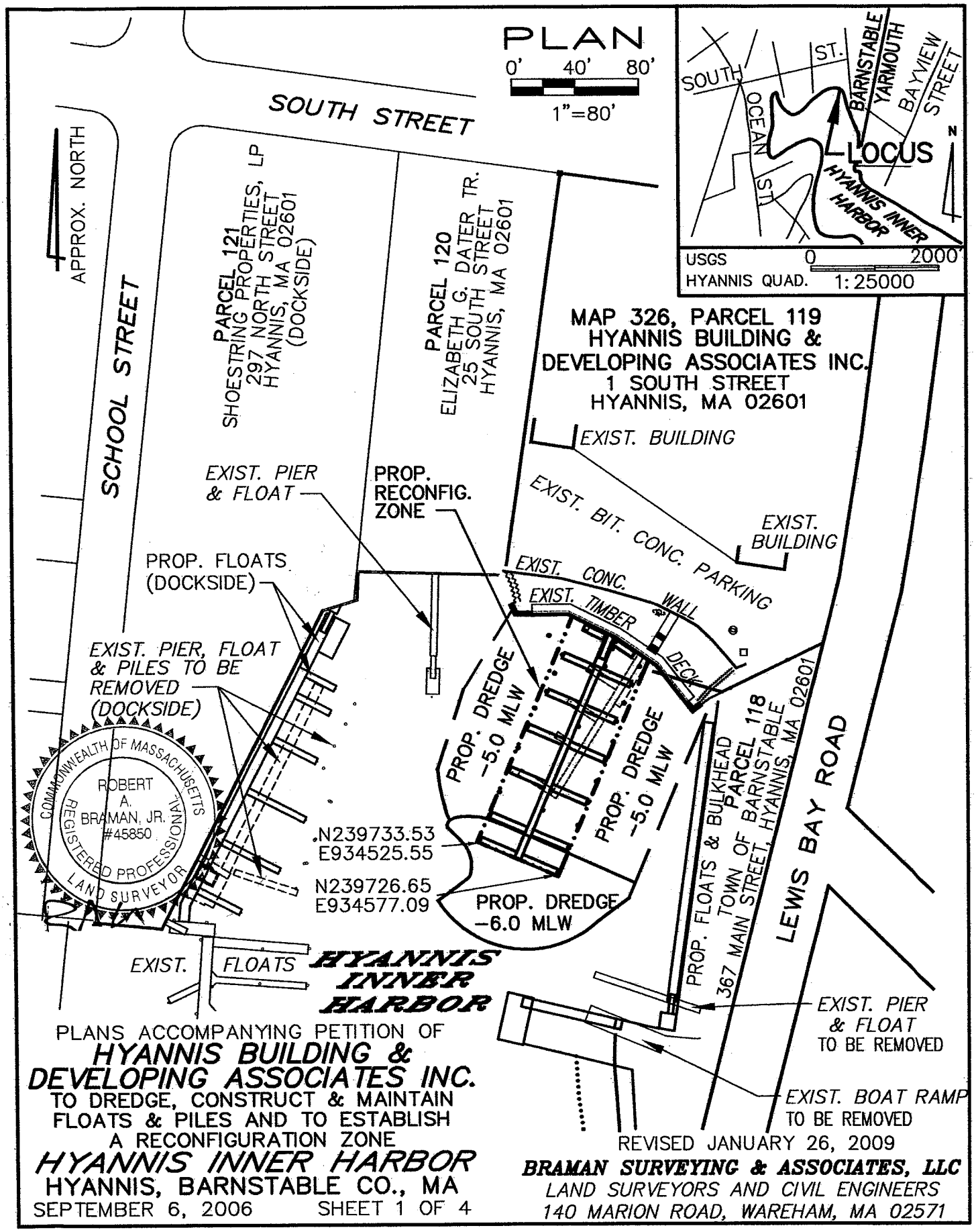

PLANS ACCOMPANYING PETITION OF

HYANNIS BUILDING & DEVELOPING ASSOCIATES INC.

TO DREDGE, CONSTRUCT & MAINTAIN FLOATS & PILES AND TO ESTABLISH A RECONFIGURATION ZONE

HYANNIS INNER HARBOR

HYANNIS, BARNSTABLE CO., MA

SEPTEMBER 6, 2006 SHEET 1 OF 4

REVISED JANUARY 26, 2009

BRAMAN SURVEYING & ASSOCIATES, LLC

LAND SURVEYORS AND CIVIL ENGINEERS

140 MARION ROAD, WAREHAM, MA 02571

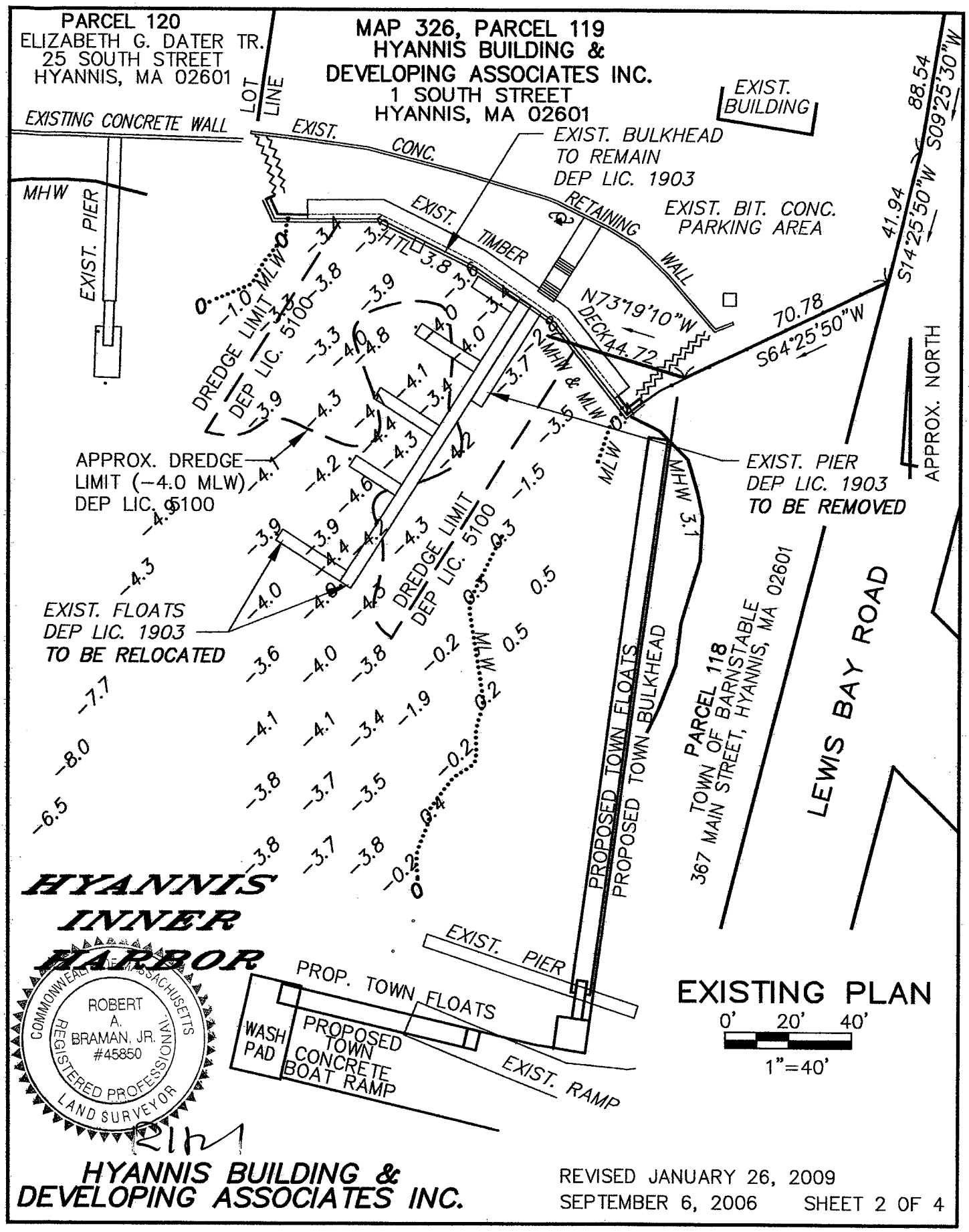

HYANNIS BUILDING &
DEVELOPING ASSOCIATES INC.

REVISED JANUARY 26, 2009
SEPTEMBER 6, 2006 SHEET 2 OF 4

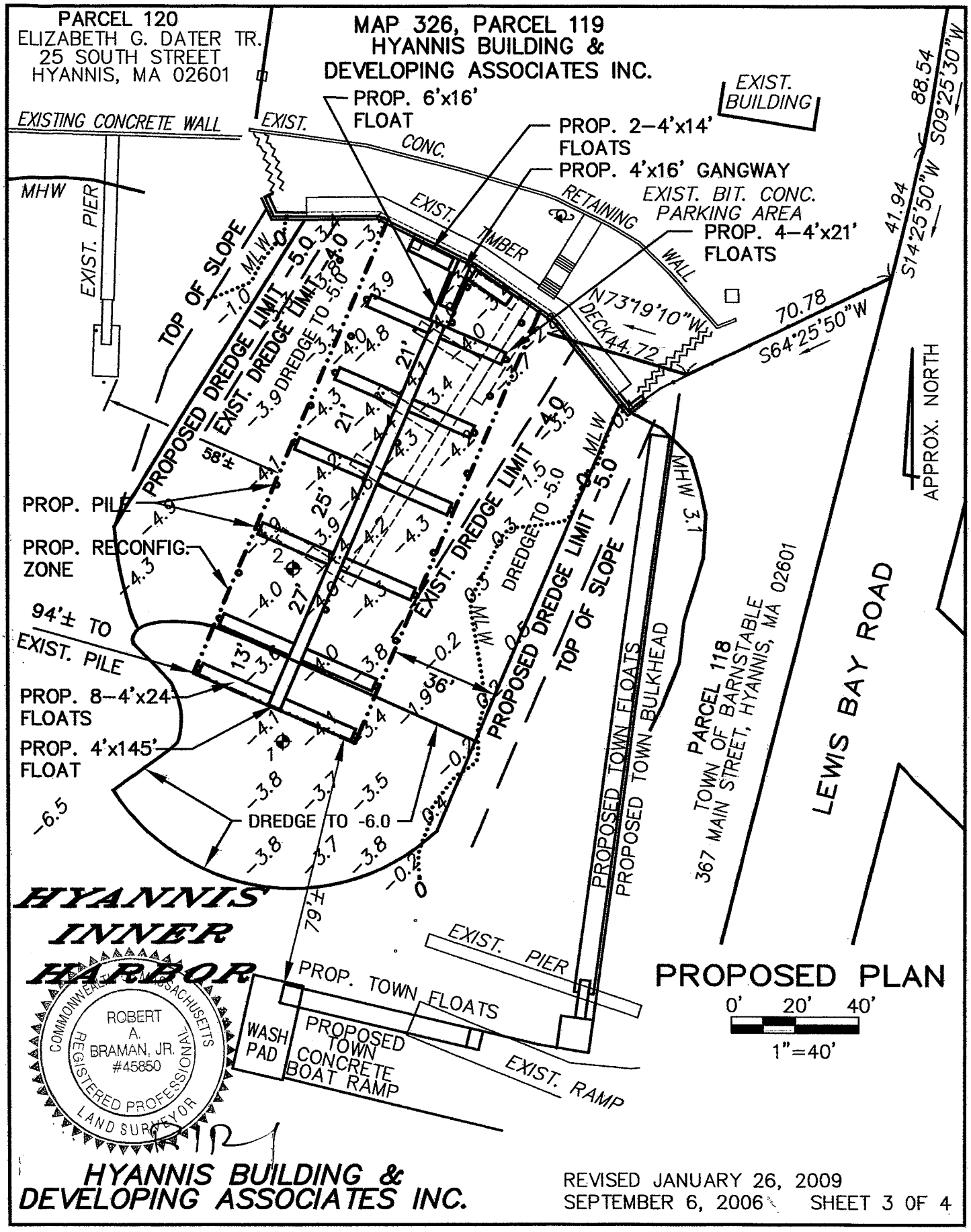

HYANNIS BUILDING & DEVELOPING ASSOCIATES INC.

REVISED JANUARY 26, 2009
SEPTEMBER 6, 2006 SHEET 3 OF 4

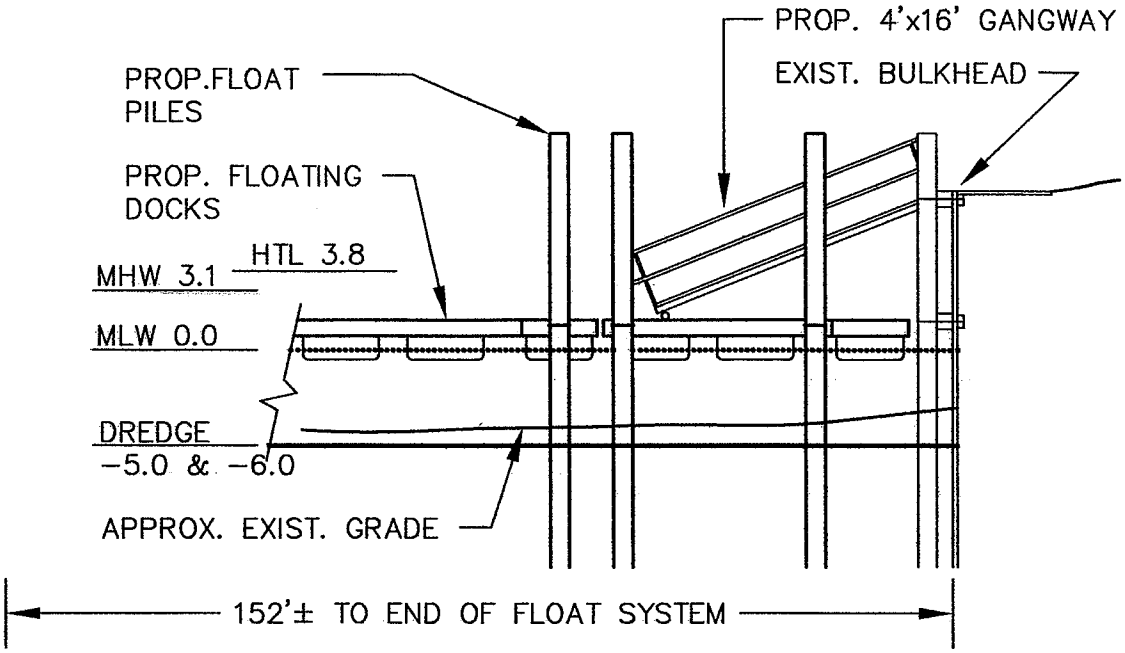

FLOATING DOCK PROFILE

0' 5' 10'

1"=10'

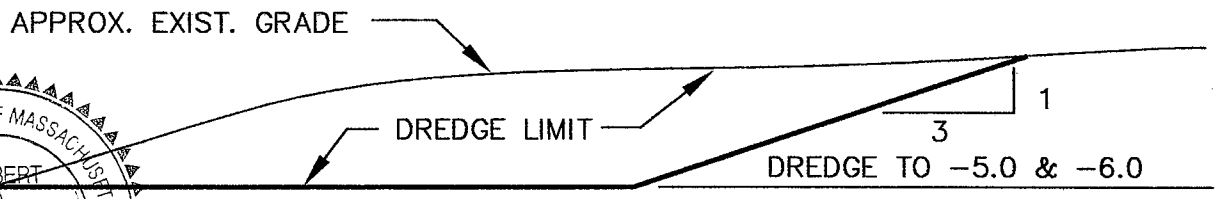

DREDGE SECTION

0' 2' 4'

1"=4'

COMMONWEALTH OF MASSACHUSETTS
ROBERT A. BRAMAN, JR. #45850
REGISTERED PROFESSIONAL LAND SURVEYOR

RIP

FLOAT SECTION

0' 1' 2'

1"=2'

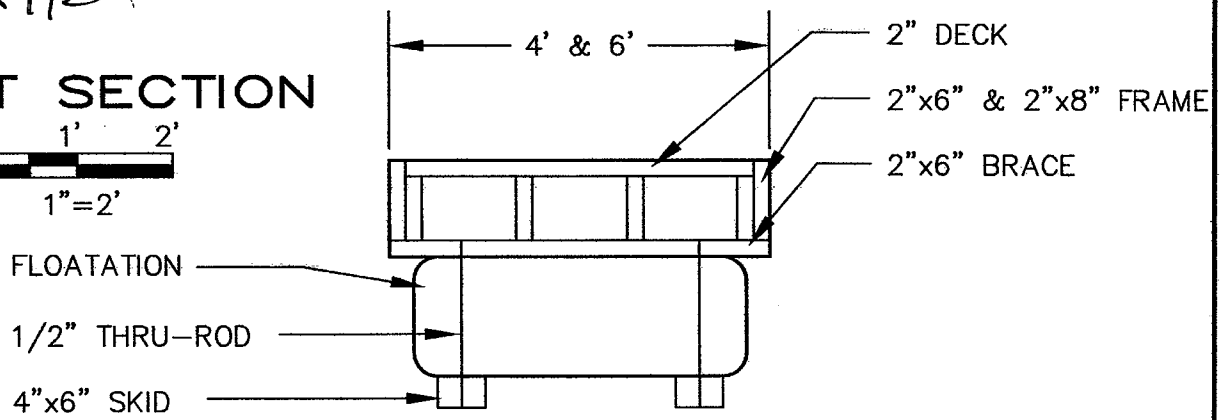

HYANNIS BUILDING & DEVELOPING ASSOCIATES INC.

REVISED JANUARY 26, 2009
SEPTEMBER 6, 2006 SHEET 4 OF 4