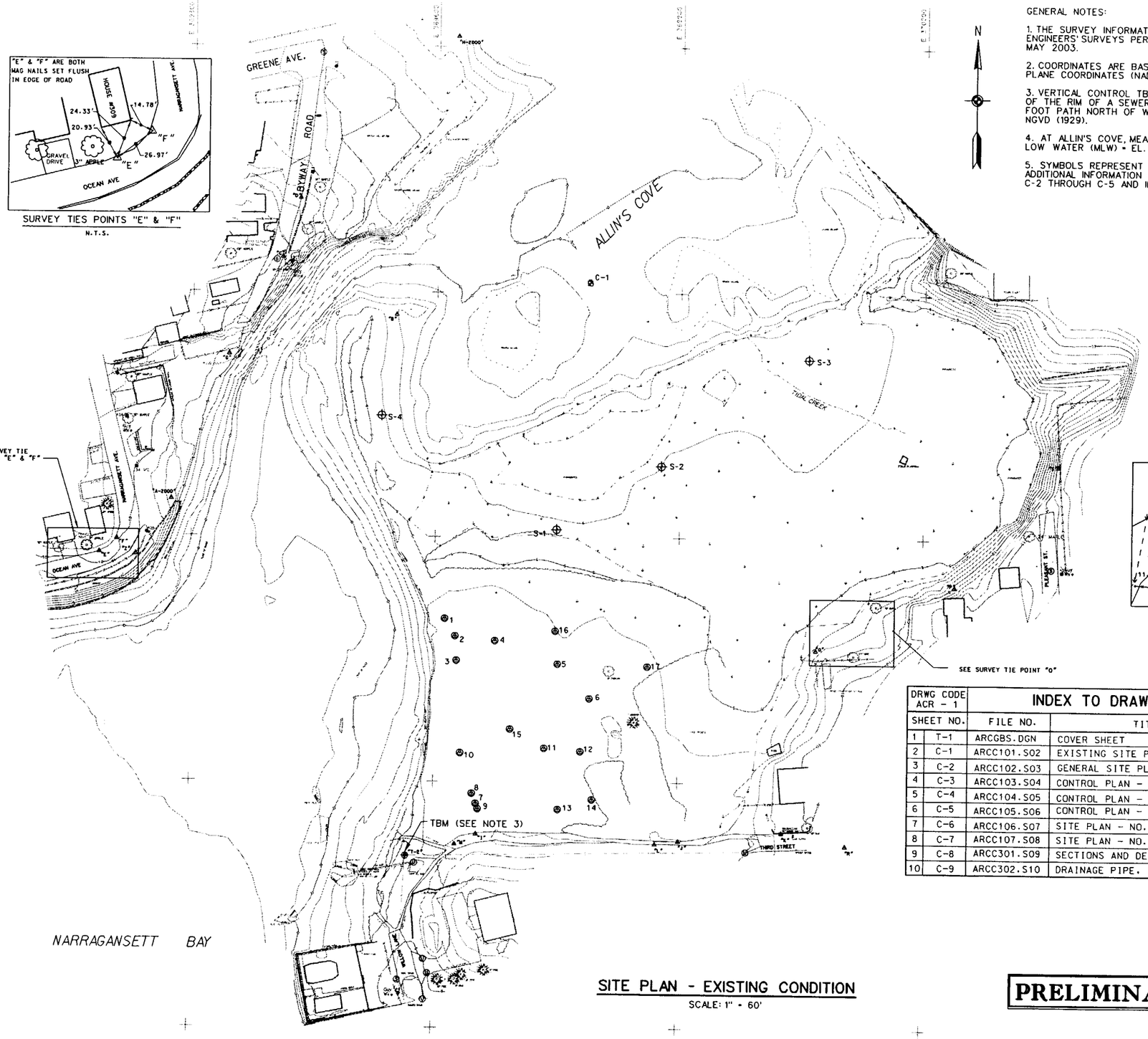

SURVEY TIES POINTS "E" & "F"

N.T.S.

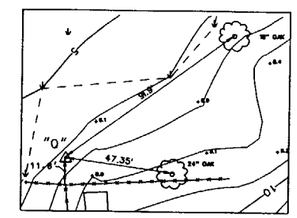

SURVEY TIES POINT "Q"

N.T.S.

GENERAL NOTES:

1. THE SURVEY INFORMATION IS FROM THE CORPS OF ENGINEERS' SURVEYS PERFORMED ON OCTOBER 2000 AND MAY 2003.

2. COORDINATES ARE BASED ON THE RHODE ISLAND STATE PLANE COORDINATES (NAD 1980).

3. VERTICAL CONTROL TBM IS AN "X" CUT IN THE NORTH SIDE OF THE RIM OF A SEWER MANHOLE. LOCATED WEST OF A FOOT PATH NORTH OF WILLOW LANE ELEVATION 6.64 NGVD (1929).

4. AT ALLIN'S COVE, MEAN HIGH WATER (MHW) - EL. 2.9 AND MEAN LOW WATER (MLW) - EL. -1.5 (ALL REFER TO FT NGVD 29)

5. SYMBOLS REPRESENT SURFACE EXPLORATION LOCATIONS. ADDITIONAL INFORMATION IS INCLUDED ON SHEETS C-2 THROUGH C-5 AND IN THE SPECIFICATIONS.

DRWG CODE ACR - 1		INDEX TO DRAWINGS	
SHEET NO.		FILE NO.	TITLE
1	T-1	ARCGBS.DGN	COVER SHEET
2	C-1	ARCC101.S02	EXISTING SITE PLAN, SURVEY TIES, NOTES AND INDEX
3	C-2	ARCC102.S03	GENERAL SITE PLAN AND LEGEND
4	C-3	ARCC103.S04	CONTROL PLAN - NO. 1
5	C-4	ARCC104.S05	CONTROL PLAN - NO. 2
6	C-5	ARCC105.S06	CONTROL PLAN - NO. 3/ SITE PLAN NO. 1
7	C-6	ARCC106.S07	SITE PLAN - NO. 2
8	C-7	ARCC107.S08	SITE PLAN - NO. 3
9	C-8	ARCC301.S09	SECTIONS AND DETAILS
10	C-9	ARCC302.S10	DRAINAGE PIPE, PLAN, SECTION AND DETAILS

SITE PLAN - EXISTING CONDITION

SCALE: 1" - 60'

PRELIMINARY

GRAPHIC SCALE: 1" - 60' 60 0 30 120

US Army Corps of Engineers
New England District

Symbol	Description	Date	Appr.	Symbol	Description	Date	Appr.

U.S. ARMY ENGINEER DISTRICT
CORPS OF ENGINEERS
CONCORD, MASSACHUSETTS

Designed by:
Drawn by:
Reviewed by:
Submitted by:
Chief, Civil Engrg Sect
JENNY TAN

Date:
Rev.
Solicitation no.: DACW33-B-YY-****
Drawing code:
Drawing code:
File name:
Plot date:
Plot scale:

WATER RESOURCES DEVELOPMENT PROJECT
BARRINGTON, RHODE ISLAND
SECTION 1135
COASTAL WETLAND ECOSYSTEM RESTORATION

SITE PLAN - EXISTING CONDITION INDEX TO DRAWINGS, LEDGEND AND NOTES

Reference number:
C-1
Sheet 2 of 10

...\1135\ri\Allin\PS\acrc101.s02 02/18/2004 07:40:23 AM

NOTE:

FOR INDIVIDUAL CONTROL AND DETAIL SITE PLANS SEE FOLLOWING SHEETS:

SHEET C-3: CONTROL PLAN - NO. 1 (CHANNEL, LOW MARSHLAND & HIGH MARSHLAND)

SHEET C-4: CONTROL PLAN - NO. 2 (UPLAND DISPOSAL AREA & SOUTH SAND SPIT)

SHEET C-5: CONTROL PLAN - NO. 3/ SITE PLAN -NO. 1 (NORTH SAND SOURCE & NORTH SAND SPIT)

SHEET C-6: SITE PLAN - NO. 2 (UPLAND DISPOSAL AREA & SOUTH SAND SPIT)

SHEET C-7: SITE PLAN - NO. 3 (CHANNEL, LOW MARSHLAND & HIGH MARSHLAND)

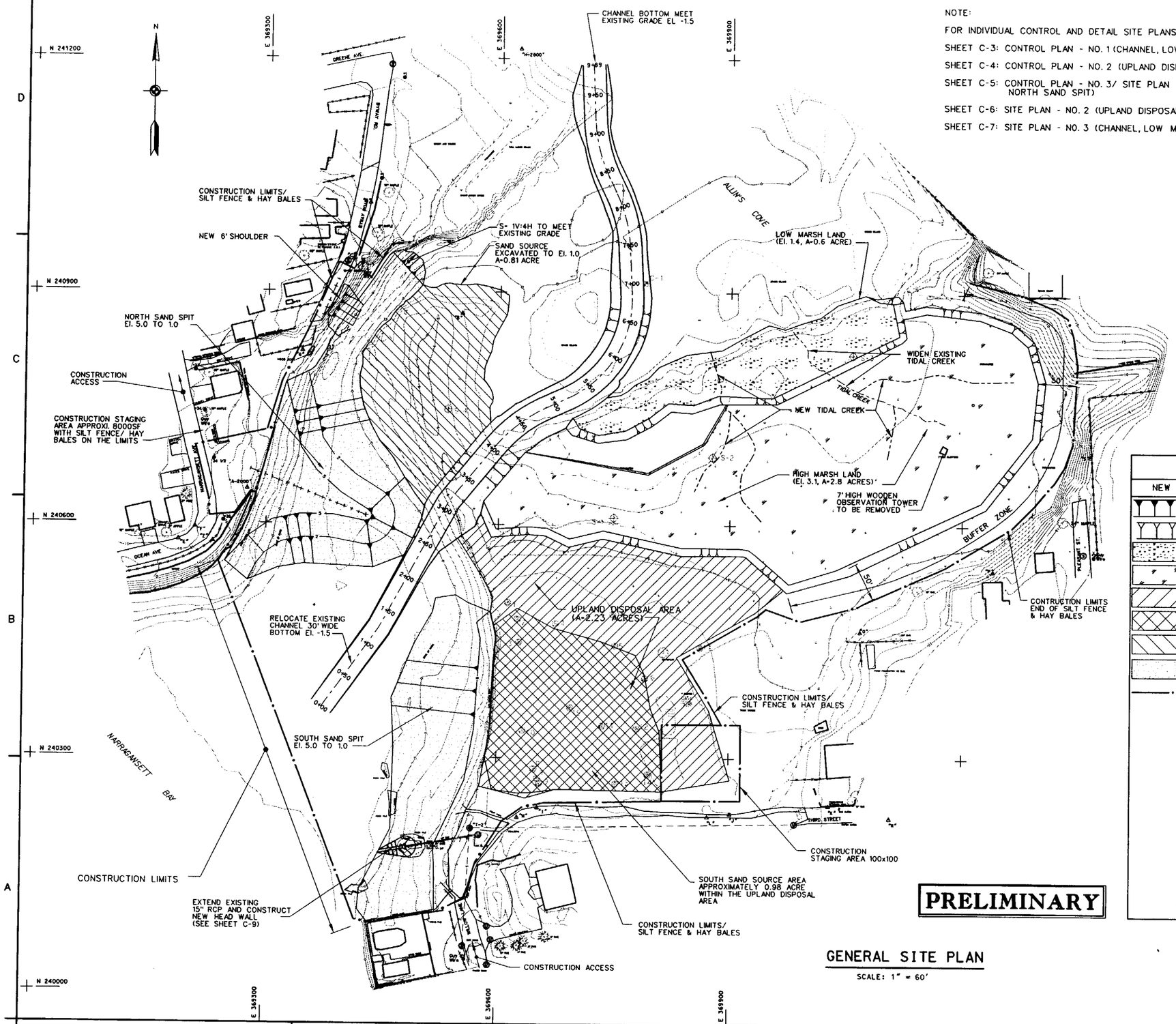

PRELIMINARY

LEGEND

NEW	EXISTING	DISTRIPTION
		FILL SLOPE
		CUT SLOPE
		LOW MARSHLAND
		HIGH MARSHLAND
		UPLAND DISPOSAL AREA
		SOUTH SAND SOURCE AREA WITHIN UPLAND DISPOASL
		SAND SOURCE AREA
		SAND SPIT
		LIMITS FOR BUFFER ZONE, STAGING AREA AND CONSTRUCTION
		LIMITS OF PHRAGMITES
		CHAIN LINK FENCE
	12	2003 RI CRMC TEST HOLE NUMBER
	S-1	2001 EXPLORATION
	C-1	2003 EXPLORATION
	34 1/2	UTILITY POLE & NUMBER
		EVERGREEN TREE
		TREE
		SURVEY CONTROL POINT
	"A-2000"	2000 SURVEY CONTROL

GENERAL SITE PLAN

SCALE: 1" = 60'

GRAPHIC SCALE: 1" = 60' 60 0 30 120

US Army Corps of Engineers New England District

Symbol	Description	Date	Appr.	Symbol	Description	Date	Appr.

Designed by: | Date: | Rev.
Drawn by: Jenny Tan | Solicitation no. DACW33-B-YY-****
Reviewed by: Jenny Tan | Drawing code: Drawing code
Submitted by: Chief, Civil Engrg Sect | File name: T - 60' Plot date: Plot scale:

U.S. ARMY ENGINEER DISTRICT CORPS OF ENGINEERS CONCORD, MASSACHUSETTS

WATER RESOURCES DEVELOPMENT PROJECT BARRINGTON, RHODE ISLAND SECTION 1135 COASTAL WETLAND ECOSYSTEM RESTORATION

GENERAL SITE PLAN, NOTES AND LEGEND

Reference number: C-2

Sheet 3 of 10

...\1135\ri\Allin\PS\acrc102.s03 02/10/2004 05:11:37 PM

CONTROL DATA - TIDAL CREEK					
PT. NO.	COORDINATES	REMARKS	PT. NO.	COORDINATES	REMARKS
T1	N 240,824.4 E 369,873.8	BEGINNING NEW TIDAL CREEK	T11	N 240,669.8 E 369,865.7	
T2	N 240,778.6 E 369,887.6		T12	N 240,644.2 E 369,854.5	END NEW TIDAL CREEK
T3	N 240,761.0 E 369,886.7		T13	N 240,774.3 E 370,064.6	NEW TIDAL CREEK INTERSECT EXISTING
T4	N 240,746.3 E 369,900.3	INTERSECTION TIDAL CREEKS	T14	N 240,791.1 E 370,093.1	
T5	N 240,698.2 E 369,932.0		T15	N 240,789.0 E 370,132.1	
T6	N 240,664.6 E 369,914.7		T16	N 240,797.1 E 370,170.5	
T7	N 240,636.7 E 369,914.2		T17	N 240,787.6 E 370,216.9	
T8	N 240,605.2 E 369,940.7	END NEW TIDAL CREEK	T18	N 240,788.5 E 370,263.9	END NEW TIDAL CREEK
T9	N 240,715.1 E 369,896.0		T19	N 240,757.3 E 370,109.3	NEW TIDAL CREEK INTERSECT EXISTING
T10	N 240,686.8 E 369,883.0		T20	N 240,686.4 E 370,102.6	END NEW TIDAL CREEK

CONTROL DATA - HIGH MARSH					
PT. NO.	COORDINATES	PT. NO.	COORDINATES	PT. NO.	COORDINATES
H1	N 240,868.9 E 370,122.6	H10	N 240,594.5 E 369,597.1	H19	N 240,546.0 E 370,051.4
H2	N 240,842.8 E 370,127.0	H11	N 240,597.4 E 369,637.4	H20	N 240,630.6 E 370,223.8
H3	N 240,836.8 E 370,120.4	H12	N 240,595.5 E 369,663.2	H21	N 240,715.1 E 370,289.3
H4	N 240,757.6 E 369,960.5	H13	N 240,582.0 E 369,691.8	H22	N 240,786.8 E 370,296.1
H5	N 240,755.9 E 369,896.9	H14	N 240,592.6 E 369,736.1	H23	N 240,834.1 E 370,282.8
H6	N 240,703.8 E 369,867.6	H15	N 240,570.8 E 369,837.9	H24	N 240,851.9 E 370,261.1
H7	N 240,664.7 E 369,793.6	H16	N 240,570.8 E 369,912.4	H25	N 240,868.0 E 370,222.1
H8	N 240,692.9 E 369,633.2	H17	N 240,569.1 E 369,924.4	H26	N 240,875.0 E 370,152.1
H9	N 240,629.8 E 369,580.5	H18	N 240,525.3 E 369,976.1		

CONTROL DATA - CHANNEL					
PT. NO.	COORDINATES	REMARKS	PT. NO.	COORDINATES	REMARKS
C1	N 240,362.9 E 369,372.8	CHANNEL BEGIN STA. 0+00	C7	N 240,898.2 E 369,770.1	CURVE 2 PT STA 6+86
C2	N 240,467.0 E 369,447.6	ANGLE POINT STA 1+26.50	C8	N 240,957.0 E 369,767.0	CURVE 3 PC STA 7+45
C3	N 240,629.0 E 369,536.1	ANGLE POINT STA 3+12	C9	N 241,029.6 E 369,748.0	CURVE 3 PT STA 8+21
C4	N 240,699.4 E 369,595.0	CURVE 1 PC STA 4+04	C10	N 241,047.3 E 369,739.6	CURVE 4 PC STA 7+43
C5	N 240,750.7 E 369,659.7	CURVE 1 PT STA 4+87.50	C11	N 241,121.7 E 369,720.4	CURVE 4 PT STA 9+18
C6	N 240,763.4 E 369,688.5	CURVE 2 PC STA 5+19	C12	N 241,192.5 E 369,717.2	APPROX. LOCATION OF END CHANNEL STA 9+88

CONTROL DATA - 2001 & 2003 EXPLORATIONS	
PT. NO.	COORDINATES
C-1	N 240,912.1 E 369,787.5
S-1	N 240,609.3 E 369,749.4
S-2	N 240,687.7 E 369,877.2
S-3	N 240,819.8 E 370,057.4
S-4	N 240,748.1 E 369,533.1

CURVE 1
N 240732.95
E 369621.49
R=185.00'
D= 30°58'14.49"
L=83.60'
T=42.52'

CURVE 2
N 240803.29
E 369775.27
R=140.00'
D= 40°55'32.00"
L=167.06'
T=95.09'

CURVE 3
N 240995.59
E 369765.35
R=185.00'
D= 30°58'14.49"
L=75.89'
T=38.48'

CURVE 4
N 241082.64
E 369722.04
R=185.00'
D= 30°58'14.49"
L=77.52'
T=39.34'

C-1 CENTER/ CONTROL LINE OF CHANNEL

CONTROL LINE OF LOW MARSHLAND AREA

LOW MARSHLAND AREA

NEW TIDAL CREEK

HIGH MARSHLAND AREA

CONTROL LINE OF HIGH MARSHLAND AREA

CENTER/ CONTROL LINE OF CHANNEL

OSPREY PLATFORM
N 240,758.6
E 370,212.8

OSPREY PLATFORM
N 240,618.1
E 369,811.6

S-1 S-2 S-3 S-4

CONTROL PLAN - NO. 1
CHANNEL, LOW MARSHLAND & HIGH MARSHLAND
SCALE: 1" = 40'

CONTROL DATA - LOW MARSH AREA													
PT. NO.	COORDINATES	PT. NO.	COORDINATES	PT. NO.	COORDINATES	PT. NO.	COORDINATES	PT. NO.	COORDINATES	PT. NO.	COORDINATES	PT. NO.	COORDINATES
L1	N 240,887.9 E 370,108.0	L5	N 240,869.3 E 370,014.5	L9	N 240,820.8 E 369,843.0	L13	N 240,773.3 E 369,767.0	L17	N 240,737.9 E 369,695.1	L21	N 240,738.5 E 369,794.7	L25	N 240,764.5 E 369,953.6
L2	N 240,890.0 E 370,090.5	L6	N 240,853.9 E 369,969.5	L10	N 240,804.2 E 369,807.0	L14	N 240,767.8 E 369,756.6	L18	N 240,725.1 E 369,702.0	L22	N 240,758.0 E 369,819.0	L26	N 240,845.5 E 370,116.4
L3	N 240,898.4 E 370,073.4	L7	N 240,859.1 E 369,948.6	L11	N 240,790.5 E 369,793.4	L15	N 240,765.1 E 369,739.7	L19	N 240,715.8 E 369,727.9	L23	N 240,756.2 E 369,853.6		
L4	N 240,885.9 E 370,037.4	L8	N 240,826.9 E 369,889.2	L12	N 240,782.0 E 369,776.9	L16	N 240,752.9 E 369,721.1	L20	N 240,721.6 E 369,763.0	L24	N 240,767.7 E 369,885.0		

PRELIMINARY

GRAPHIC SCALE:
40 0 40 80
1" = 40'

US Army Corps of Engineers
New England District

Rev.	Date	Description	Appr.	Symbol

Designed by: JENNY IAN	Solicitation no. DACW33-B-YY-****
Drawn by: JENNY IAN	Drawing code:
Reviewed by:	File name:
Submitted by: Chief, Civil Engrg Sect.	Plot date: Plot scale: 1" = 40'

U.S. ARMY ENGINEER DISTRICT
CORPS OF ENGINEERS
CONCORD, MASSACHUSETTS

WATER RESOURCES DEVELOPMENT PROJECT
BARRINGTON, RHODE ISLAND
SECTION 1135
COASTAL WETLAND ECOSYSTEM RESTORATION
CONTROL PLAN - NO. 1
CHANNEL, LOW MARSH & HIGH MARSH

Reference number:
C-3
Sheet 3 of 10

...\1135\ri\Allin\PS\acrc103.s04 03/22/2004 01:51:02 PM

CONTROL DATA - DISPOSAL AREA					
PT. NO.	COORDINATES (SHARED)	PT. NO.	COORDINATES	PT. NO.	COORDINATES
D1	N 240,487.7 E 369,933.1	SD10	N 240,455.1 E 369,598.3	D19	N 240,586.9 E 369,637.8
D2	N 240,429.9 E 369,832.5	SD11	N 240,488.3 E 369,590.8	D20	N 240,585.9 E 369,660.3
D3	N 240,362.3 E 369,874.3	D12	N 240,505.8 E 369,593.7	D21	N 240,571.4 E 369,689.9
D4	N 240,272.2 E 369,901.4	D13	N 240,530.2 E 369,581.2	D22	N 240,582.6 E 369,736.0
D5	N 240,257.7 E 369,813.7	D14	N 240,581.6 E 369,547.9	D23	N 240,561.2 E 369,836.9
D6	N 240,259.8 E 369,675.9	D15	N 240,596.8 E 369,569.6	D24	N 240,561.2 E 369,916.3
D7	N 240,248.3 E 369,637.7	D16	N 240,609.0 E 369,573.9	D25	N 240,560.5 E 369,921.3
SD8	N 240,263.0 E 369,578.0	D17	N 240,613.6 E 369,577.5	D26	N 240,517.0 E 369,969.0
SD9	N 240,334.9 E 369,590.8	D18	N 240,583.6 E 369,591.0		

CONTROL DATA - SOUTH SAND SOURCE EXCAVATION			
PT. NO.	COORDINATES	PT. NO.	COORDINATES
SE1	N 240,432.8 E 369,778.9	SE9	N 240,259.2 E 369,594.5
SE2	N 240,408.2 E 369,790.9	SE10	N 240,301.6 E 369,584.7
SE3	N 240,363.1 E 369,799.4	SD9	N 240,334.9 E 369,590.8
SE4	N 240,334.1 E 369,810.9	SD10	N 240,455.1 E 369,598.3
D5	N 240,257.7 E 369,813.7	SE13	N 240,470.0 E 369,595.2
D6	N 240,259.8 E 369,675.9	SE14	N 240,492.4 E 369,625.6
SE7	N 240,256.1 E 369,650.3	SE15	N 240,467.0 E 369,671.6
SE8	N 240,254.6 E 369,628.8	SE16	N 240,450.1 E 369,734.2

CONTROL DATA - SOUTH SAND SPIT					
PT. NO.	COORDINATES (SHARED)	PT. NO.	COORDINATES	PT. NO.	COORDINATES
SD8	N 240,263.0 E 369,578.0	SS4	N 240,127.0 E 369,542.8	SS12	N 240,445.9 E 369,493.7
SD9	N 240,334.9 E 369,590.8	SS5	N 240,105.0 E 369,525.5	SS13	N 240,486.3 E 369,517.0
SD10	N 240,455.1 E 369,598.3	SS6	N 240,089.6 E 369,434.2	SS14	N 240,503.9 E 369,520.6
SD11	N 240,488.3 E 369,590.8	SS7	N 240,104.6 E 369,422.8	SS15	N 240,508.0 E 369,545.4
		SS8	N 240,131.4 E 369,425.4	SS16	N 240,500.3 E 369,560.4
SS1	N 240,232.3 E 369,562.2	SS9	N 240,208.0 E 369,464.7	SS17	N 240,473.4 E 369,572.9
SS2	N 240,201.1 E 369,551.2	SS10	N 240,312.9 E 369,467.3		
SS3	N 240,181.3 E 369,540.3	SS11	N 240,376.5 E 369,464.7		

PT. NO.	COORDINATES	REMARKS
SS18	N 240,184.8 E 369,484.7	APPROX. LOCATION OF NEW HEADWALL/ END 20-LF OF 15" BCCMP TO BE VERIFIED IN THE FIELD
SS19	N 240,188.4 E 369,504.9	APPROXIMATE LOCATION OF EXISTING CONCRETE HEADWALL. ACTUAL LOCATION SHALL BE VERIFIED IN FIELD

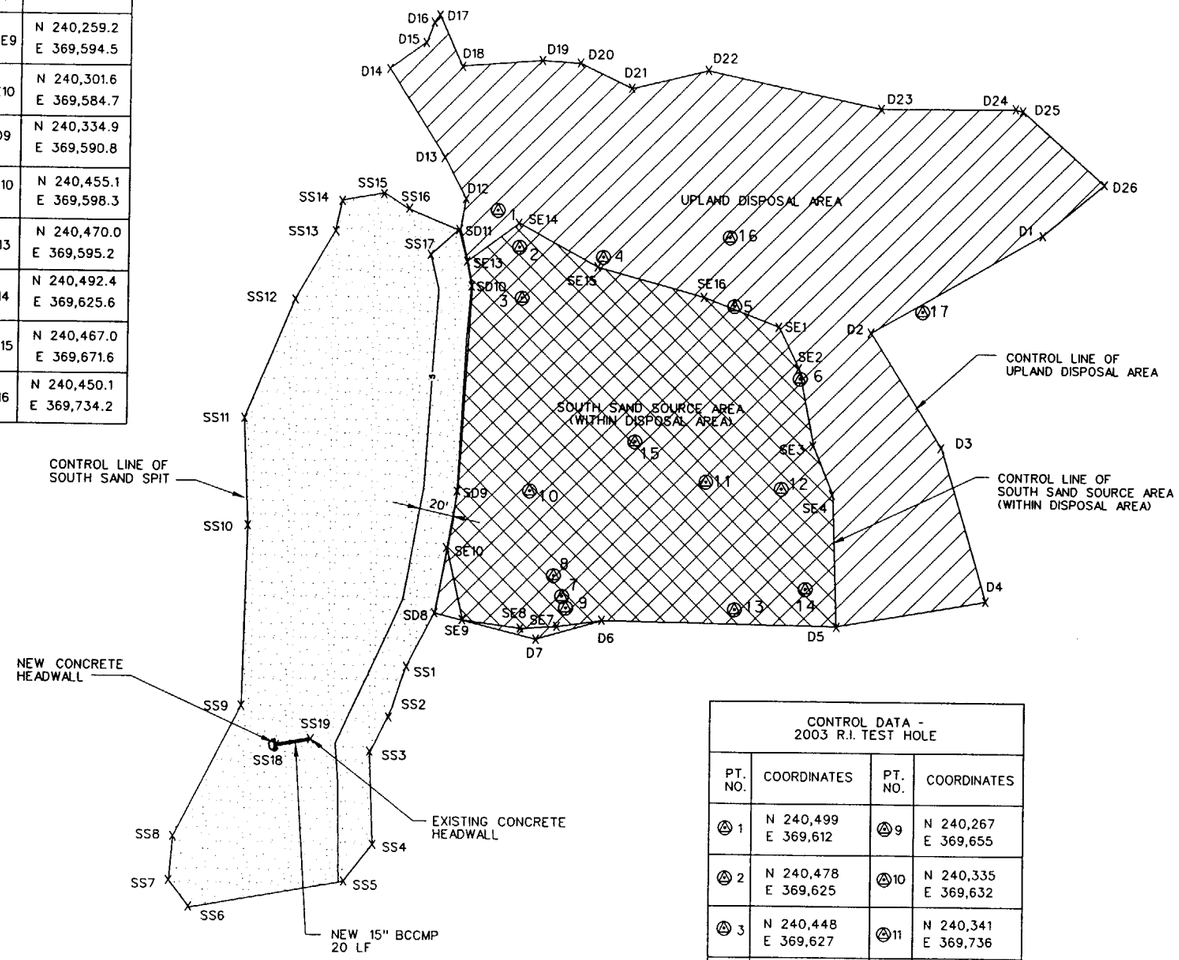

CONTROL DATA - 2003 R.I. TEST HOLE			
PT. NO.	COORDINATES	PT. NO.	COORDINATES
1	N 240,499 E 369,612	9	N 240,267 E 369,655
2	N 240,478 E 369,625	10	N 240,335 E 369,632
3	N 240,448 E 369,627	11	N 240,341 E 369,736
4	N 240,473 E 369,675	12	N 240,338 E 369,781
5	N 240,445 E 369,752	13	N 240,267 E 369,754
6	N 240,402 E 369,791	14	N 240,279 E 369,795
7	N 240,273 E 369,653	15	N 240,365 E 369,693
8	N 240,285 E 369,647	16	N 240,486 E 369,749

CONTROL PLAN - NO. 2
UPLAND DISPOSAL AREA, SOUTH SAND SOUCE & SOUTH SAND SPIT

SCALE: 1" = 40'

PRELIMINARY

GRAPHIC SCALE: 40 0 40 80
1" = 40'

US Army Corps of Engineers
New England District

U.S. ARMY ENGINEER DISTRICT CORPS OF ENGINEERS CONCORD, MASSACHUSETTS

Designed by: JENNY TAN
Drawn by: JENNY TAN
Reviewed by:
Submitted by: Chief, Civil Engrg Sect

Solicitation no. DACW33-8-YY-****
Drawing code:
File name: PNLDP** 50+
Plotted: 04-Feb-2004
Plot scale: 1" = 40'

WATER RESOURCES DEVELOPMENT PROJECT
BARRINGTON, RHODE ISLAND
COASTAL WETLAND ECOSYSTEM RESTORATION
SECTION 1135

CONTROL PLAN - NO. 2 UPLAND DISPOSAL, SOUTH SAND SPIT AND LOCATIONS OF TEST HOLES

Reference number: C-4
Sheet 5 of 10

...\1135\ri\Allin\PS\acrc104.s05 02/10/2004 05:06:34 PM

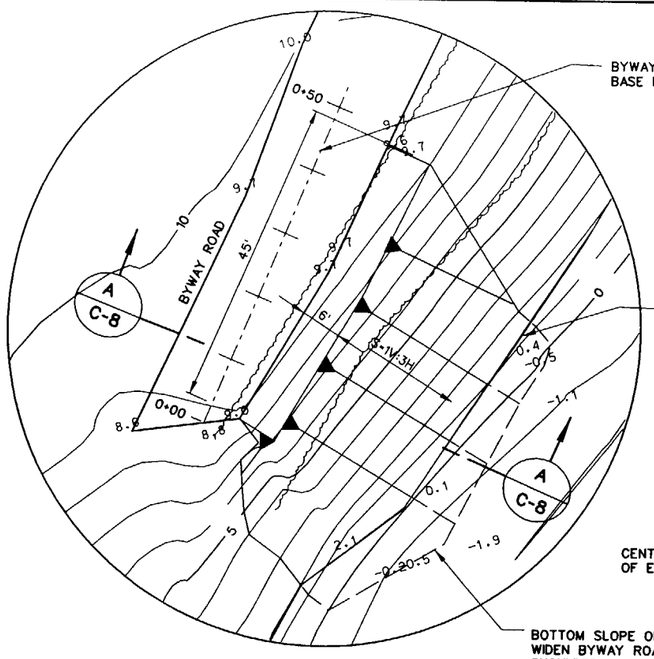

ENLARGED PLAN

SCALE: 1" = 10'

NOTE:

ONLY SAND FROM ON-SITE SOURCES WILL BE UTILIZED TO CONSTRUCT THE NORTH SAND SPIT.

CONTROL DATA - NORTH SAND SPIT/ SOURCE		
PT. NO.	COORDINATES	REMARKS
NS1	N 240,907.8 E 369,498.7	BOTTOM SLOPE OF END OF NORTH SAND SPIT
NS2	N 240,730.9 E 369,588.3	EXCAVATED EL 1.0 MEET THE CHANNEL EXCAVATION SLOPE
NS3	N 240,622.8 E 369,504.1	EXCAVATED EL 1.0 MEET THE CHANNEL EXCAVATION SLOPE
NS4	N 240,560.0 E 369,478.3	NORTH SAND SPIT MEET EXCAVATED CHANNEL SLOPE
NS5	N 240,526.5 E 369,277.0	BOTTOM SLOPE OF END OF NORTH SAND SPIT
NS6	N 240,551.2 E 369,247.5	TOP SLOPE OF END OF NORTH SAND SPIT
NS7	N 240,781.8 E 369,324.4	END OF EL. 5.0 SAND SPIT
NS8	N 240,797.7 E 369,356.1	BEGIN OF EL. 2.0 SAND SPIT
NS9	N 240,950.4 E 369,459.0	END OF EL. 2.0 SAND SPIT
BASE LINE OF EL. 5.0 - NORTH SAND SPIT		
TS1	N 240,611.0 E 369,428.5	CENTER OF 15' DIAMETER END/ STATION 0+00
TS2	N 240,670.0 E 369,279.4	STATION 1+60
BASE LINE WIDEN THE SHOULDER OF BYWAY RD		
BR1	N 240,868.6 E 369,370.7	STATION 0+00
BR2	N 240,915.1 E 369,389.9	STATION 0+50

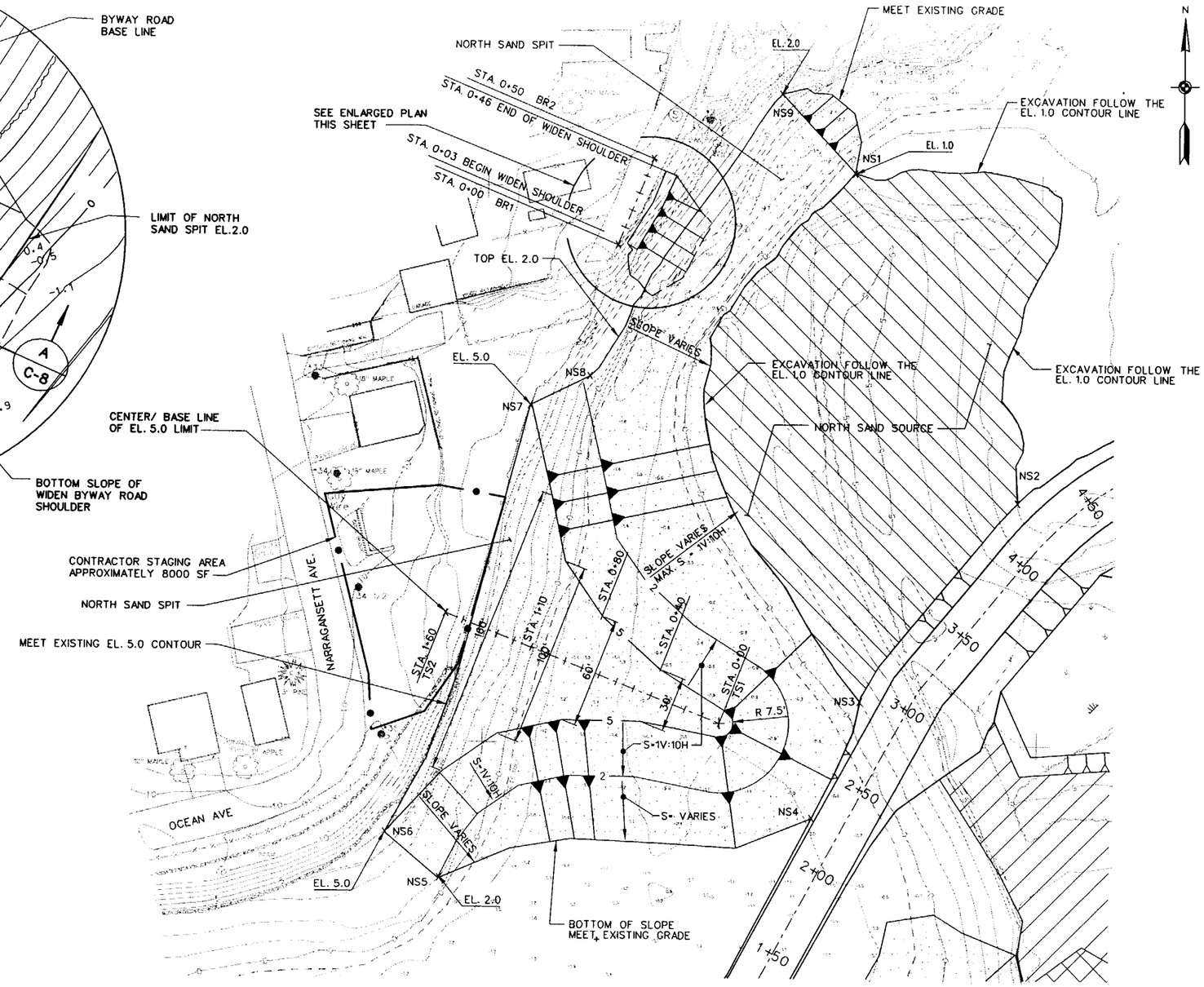

CONTROL PLAN - NO.3/ SITE PLAN - NO.1
NORTH SAND SOURCE & NORTH SAND SPIT

SCALE: 1" = 30'

GRAPHIC SCALE: 1" = 10' (10 0 10 20)

GRAPHIC SCALE: 1" = 30' (30 0 30 60)

PRELIMINARY

US Army Corps of Engineers
New England District

U.S. ARMY ENGINEER DISTRICT
CORPS OF ENGINEERS
CONCORD, MASSACHUSETTS

Designed by: JENNY TAN
Drawn by: JENNY TAN
Reviewed by:
Submitted by:
Chief, Civil Engrg Sect

WATER RESOURCES DEVELOPMENT PROJECT
BARRINGTON, RHODE ISLAND
SECTION 1135
COASTAL WETLAND ECOSYSTEM RESTORATION
CONTROL PLAN NO. 3/SITE PLAN NO. 1
NORTH SAND SOURCE & NORTH SAND SPIT

Reference number: C-5

Sheet 6 of 10

...\1135\ri\Allin\PS\acrc105.s06 02/10/2004 03:23:53 PM

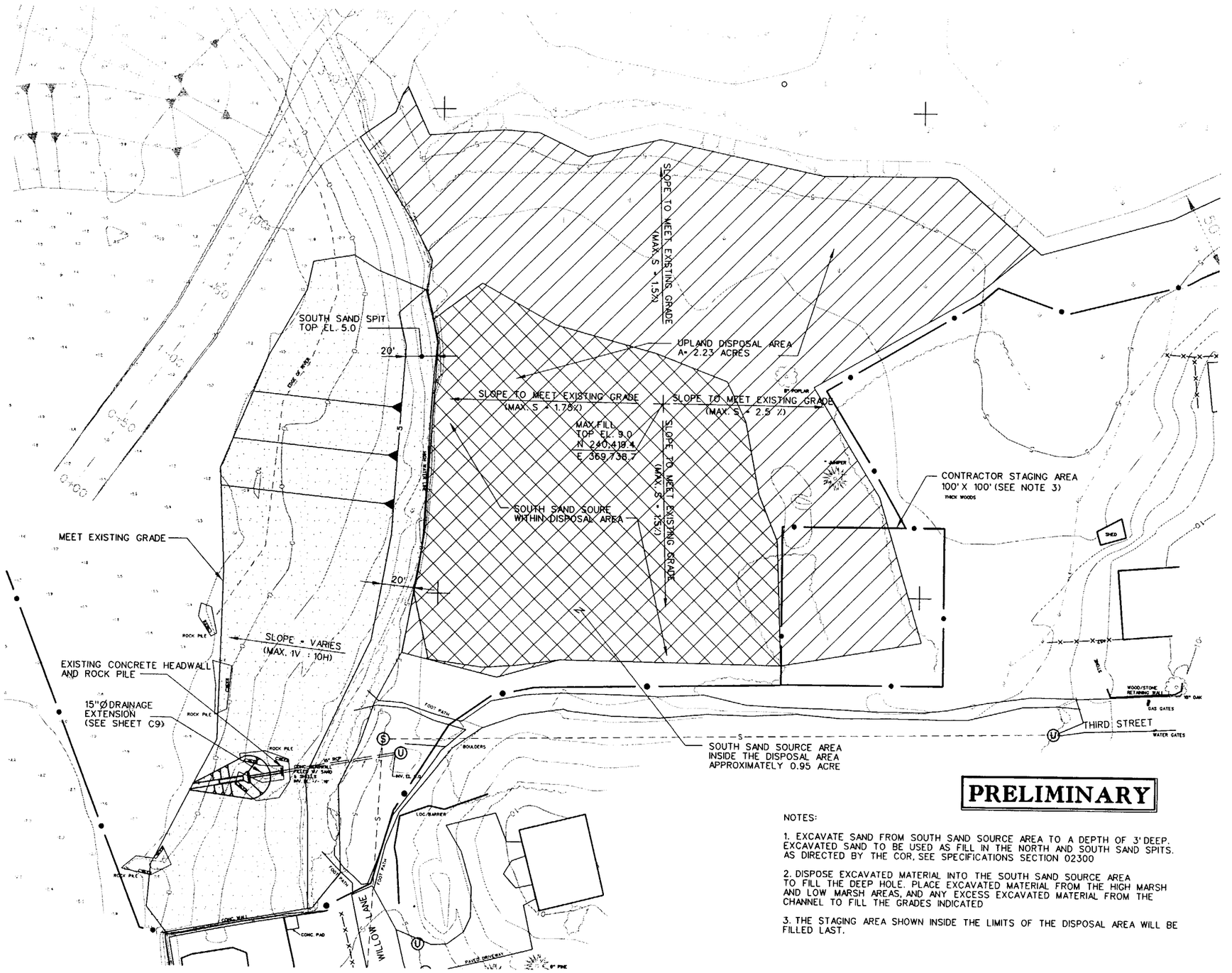

PRELIMINARY

NOTES:

1. EXCAVATE SAND FROM SOUTH SAND SOURCE AREA TO A DEPTH OF 3' DEEP. EXCAVATED SAND TO BE USED AS FILL IN THE NORTH AND SOUTH SAND SPITS. AS DIRECTED BY THE COR, SEE SPECIFICATIONS SECTION 02300

2. DISPOSE EXCAVATED MATERIAL INTO THE SOUTH SAND SOURCE AREA TO FILL THE DEEP HOLE. PLACE EXCAVATED MATERIAL FROM THE HIGH MARSH AND LOW MARSH AREAS, AND ANY EXCESS EXCAVATED MATERIAL FROM THE CHANNEL TO FILL THE GRADES INDICATED

3. THE STAGING AREA SHOWN INSIDE THE LIMITS OF THE DISPOSAL AREA WILL BE FILLED LAST.

SITE PLAN - NO. 2
(UPLAND DISPOSAL AREA & SOUTH SAND SPIT)

SCALE: 1" = 30'

GRAPHIC SCALE: 1" = 30' 30 0 30 60

US Army Corps of Engineers
New England District

Symbol	Description	Date	Appr.	Symbol	Description	Date	Appr.

U.S. ARMY ENGINEER DISTRICT
CORPS OF ENGINEERS
CONCORD, MASSACHUSETTS

Designed by: JENNY TAN
Drawn by: JENNY TAN
Reviewed by:
Submitted by: Chief, Civil Engrg Sect
Date:
Rev.
Solicitation no. DACW33-B-YY-****
Drawing code: Drawing code
File name: Plot date: dd-MON-20yy Plot scale: 1" = 30'

WATER RESOURCES DEVELOPMENT PROJECT
BARRINGTON, RHODE ISLAND
SECTION 1135
COASTAL WETLAND ECOSYSTEM RESTORATION

SITE PLAN - NO. 2
DISPOSAL AREA & SOUTH SAND SPIT

Reference number:
C-6
Sheet 7 of 10

...\1135\ri\Allin\PS\acrc106.s07 02/18/2004 07:24:22 AM

NOTES:

1. MATERIAL FROM CHANNEL EXCAVATION TO BE USED AS FOLLOWS:
   a. BETWEEN STATIONS 0+00 TO 4+25, PLACE THE MATERIAL IN NORTH SAND SPIT
   b. FROM STATION 4+25 TO END OF CHANNEL, PLACE THE MATERIAL IN LIMITS OF THE SOUTH SAND SOURCE AREA LOCATED WITHIN THE UPLAND DISPOSAL AREA.
2. THE PORTION OF THE CHANNEL ABOVE STA. 4+25 SHALL BE EXCAVATED PRIOR TO EXCAVATE THE PORTION BETWEEN STA. 4+25 AND 3+00 (SEE SPECS SEC. 02300).

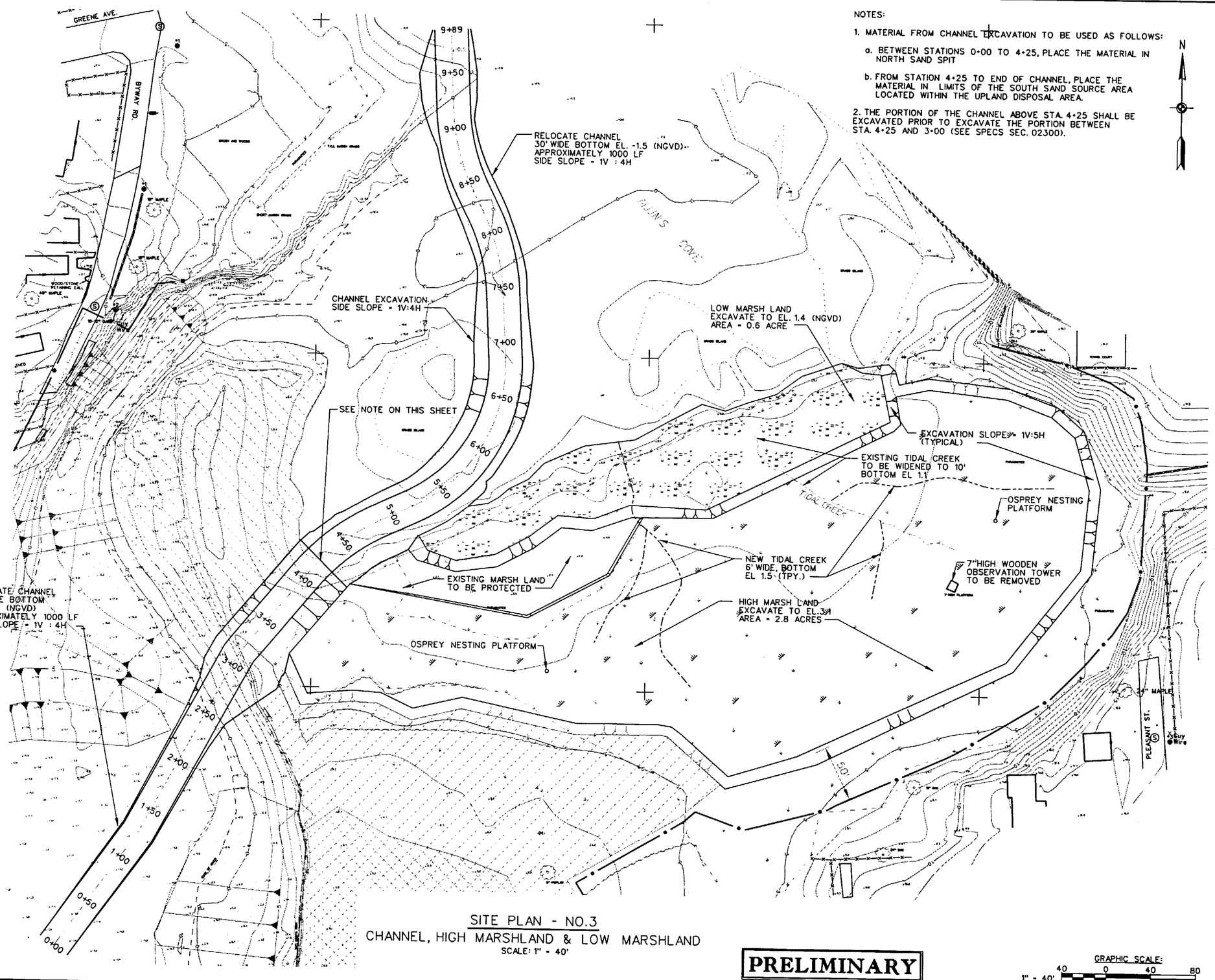

SITE PLAN - NO.3

CHANNEL, HIGH MARSHLAND & LOW MARSHLAND

SCALE: 1" = 40'

PRELIMINARY

GRAPHIC SCALE: 1" = 40' 40 0 40 80

US Army Corps of Engineers
New England District

Symbol	Description	Date	Appr.	Symbol	Description	Date	Appr.

U.S. ARMY ENGINEER DISTRICT
CORPS OF ENGINEERS
CONCORD, MASSACHUSETTS

Designed by:
Drawn by: JENNY TAN
Reviewed by: JENNY TAN
Submitted by:
Chief, Civil Engrg Sect

Date:
Rev.
Solicitation no. DACW33-B-YY-****
Drawing code:
Drawing code
File name: PRJD**-50*
Plot date: 04-MON-20yy
Plot scale: 1" = 40'

WATER RESOURCES DEVELOPMENT PROJECT
BARRINGTON, RHODE ISLAND
SECTION 1135
COASTAL WETLAND ECOSYSTEM RESTORATION

SITE PLAN - NO. 3
CHANNEL, HIGH & LOW MARSHLANDS

Reference number:
C-7
Sheet 8 of 10

...\1135\ri\Allin\PS\acrc107.s08 03/22/2004 11:36:42 AM

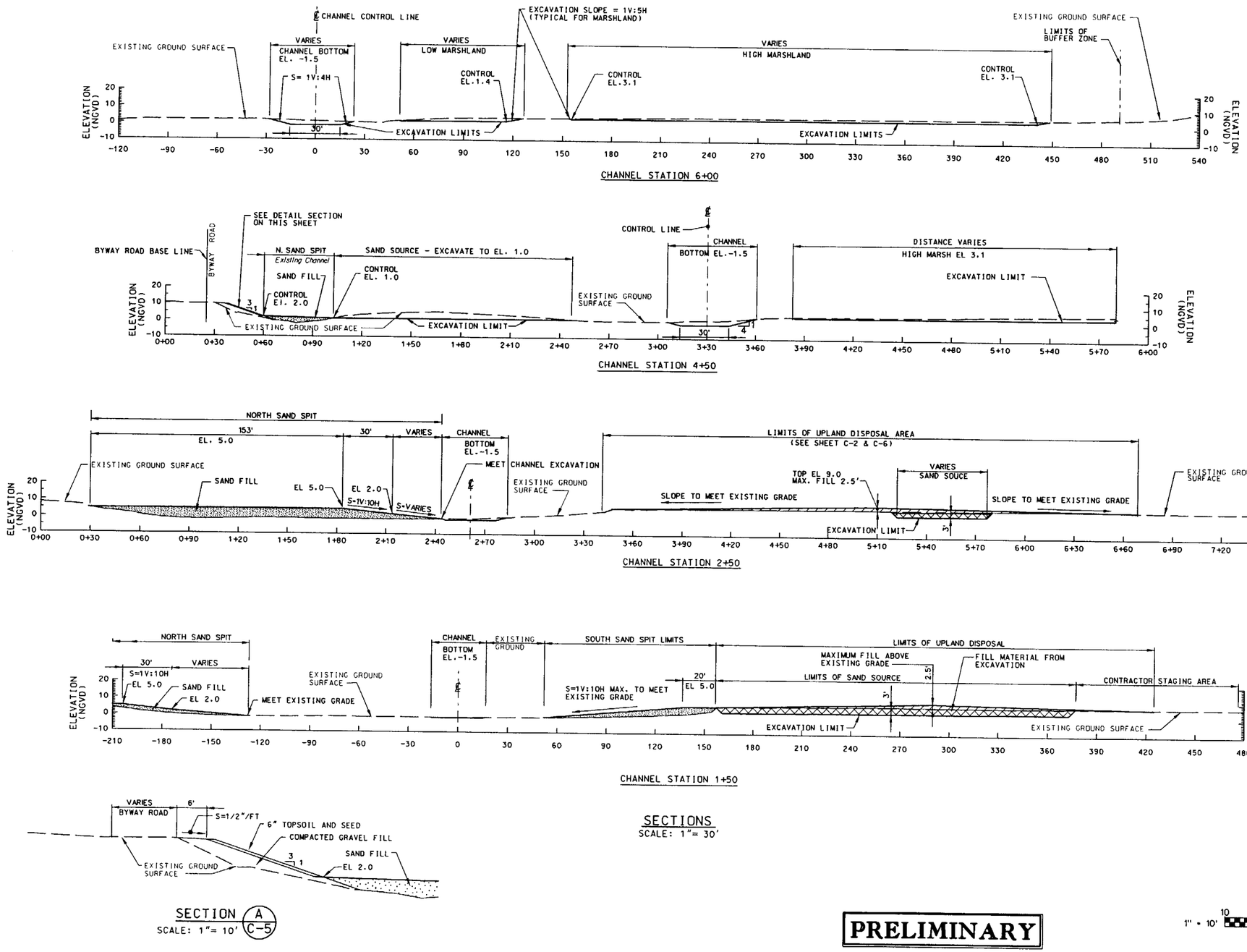

PRELIMINARY

US Army Corps of Engineers
New England District

U.S. ARMY ENGINEER DISTRICT
CORPS OF ENGINEERS
CONCORD, MASSACHUSETTS

Designed by: Jenny Tan
Drawn by: Jenny Tan
Reviewed by:
Submitted by:
Chief, Civil Engrg Sect

Date:
Rev.
Solicitation no. DACW33-B-YY-****
Drawing code:
File name: PRJD**.SD*
Plot date:
Plot scale: 1" = 30'

WATER RESOURCES DEVELOPMENT PROJECT
BARRINGTON, RHODE ISLAND
SECTION 1135
COASTAL WETLAND ECOSYSTEM RESTORATION

SECTIONS

Reference number:
C-8
Sheet 9 of 10

...\1135\ri\Allin\PS\acrc301.s09 02/10/2004 03:50:31 PM

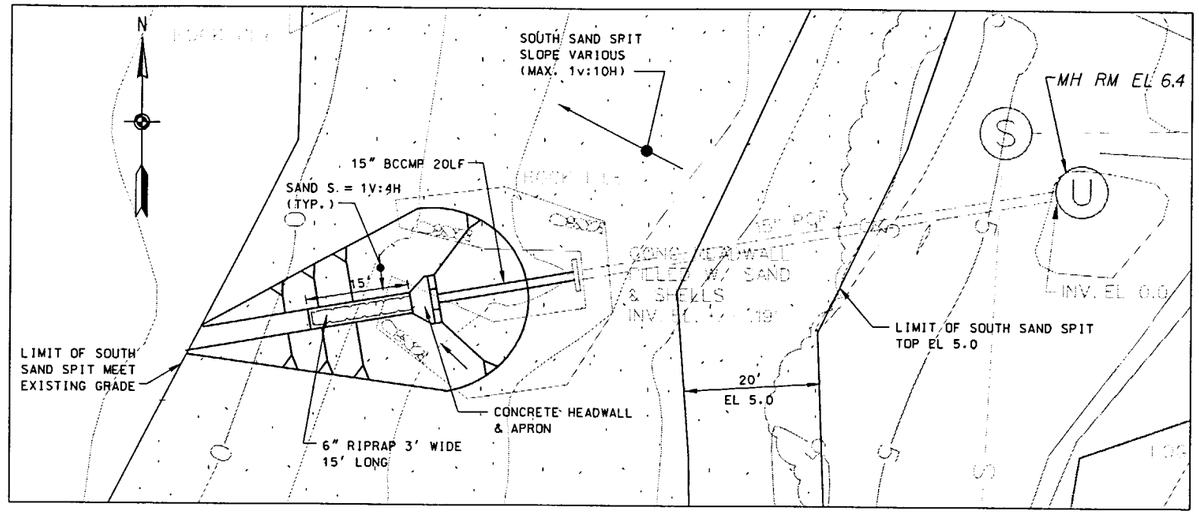

DRAINAGE DETAIL PLAN

SCALE: 1" = 10'

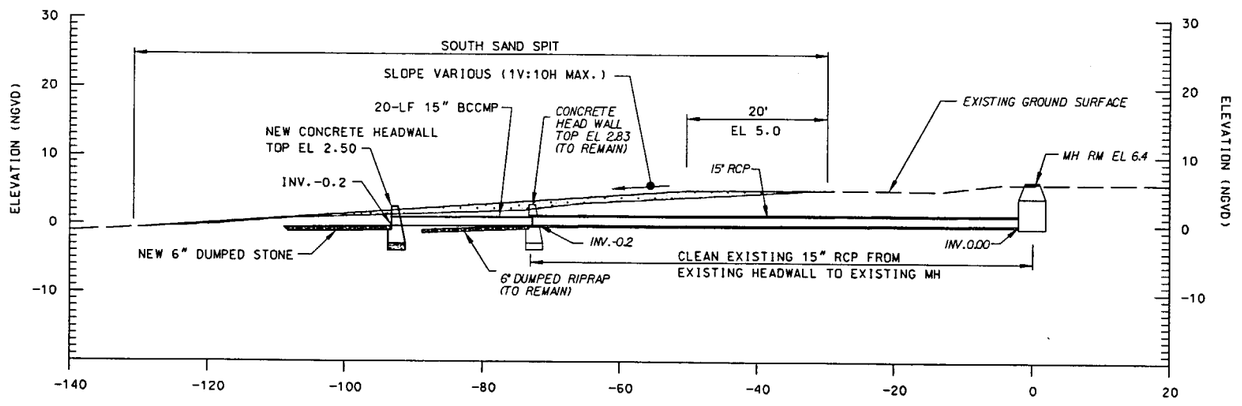

Corrugate Steel Pipe: Fully Bituminous Coated AASHTD M 190 Type A and ASTM A 760/A 760M zinc (Type 2) coated pipe. Type I pipe with helical 2-2/3 by ½ inch corrugations.

PROFILE ALONG DRAINAGE PIPE

SCALE: 1" = 10'

PRELIMINARY

CONCRETE NOTES:

1. REINFORCEMENT DETAILING AND PLACEMENT SHALL CONFORM TO ACI SP-66 AND ACI 318.
2. CONCRETE SHALL CONFORM TO ASTM C 94.
3. CONCRETE WORK SHALL CONFORM TO ACI 318. PART ENTITLED "CONSTRUCTION REQUIREMENTS".
4. COMPRESSIVE STRENGTH IN 28 DAYS SHALL BE 3000 PSI.
5. ENTRAINED-AIR CONTENT OF CONCRETE SHALL BE BETWEEN 5 AND 7 PERCENT.
6. SLUMP AT PLACEMENT SHALL BE BETWEEN 3 AND 4 INCHES.
7. CONCRETE SHALL BE CURED FOR 7 DAYS AFTER PLACEMENT.

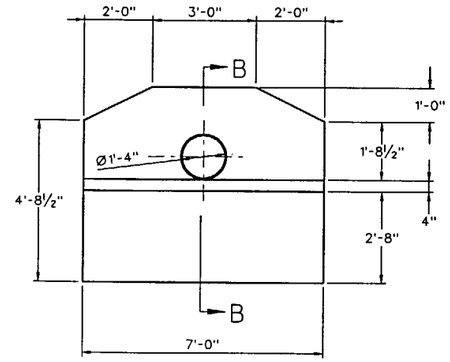

ELEVATION

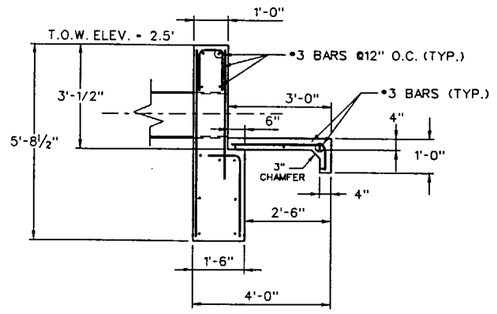

SECTION B-B

HEADWALL DETAIL

SCALE: ½" = 1'

GRAPHIC SCALE:
1" = 10' (10 0 10 20)

GRAPHIC SCALE:
½" = 1'-0" (1' 0 1' 2' 3' 4' 5')

US Army Corps of Engineers
New England District

Symbol	Description	Date	Appr.	Description	Date	Appr.

Designed by: Jenny Tan
Drawn by: Jenny Tan
Reviewed by:
Submitted by:
Chief, Civil Engg Sect

Date: 1" = 10' Rev.
Solicitation no.: DACW33-B-YY-****
Drawing code:
Drawing code:
File name:
Plot date:
Plot scale:

U.S. ARMY ENGINEER DISTRICT
CORPS OF ENGINEERS
CONCORD, MASSACHUSETTS

WATER RESOURCES DEVELOPMENT PROJECT
BARRIER ISLANDS, MONOMOY ISLAND
SECTION 1135
COASTAL WETLAND ECOSYSTEM RESTORATION

DRAINAGE DETAIL PLAN, HEADWALL DETAIL AND PROFILE ALONG THE DRAINAGE PIPE

Reference number:
C-9
Sheet 10 of 10