US Army Corps
of Engineers
New England District

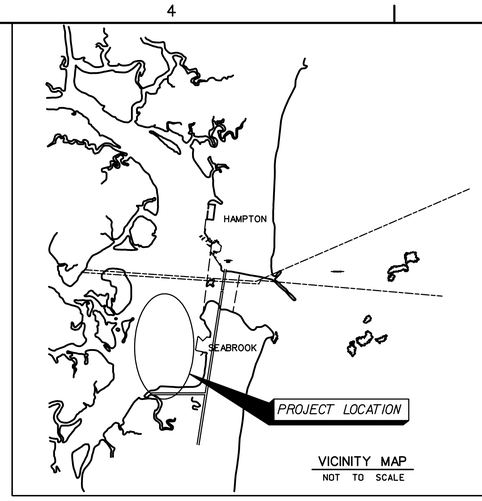

VICINITY MAP
NOT TO SCALE

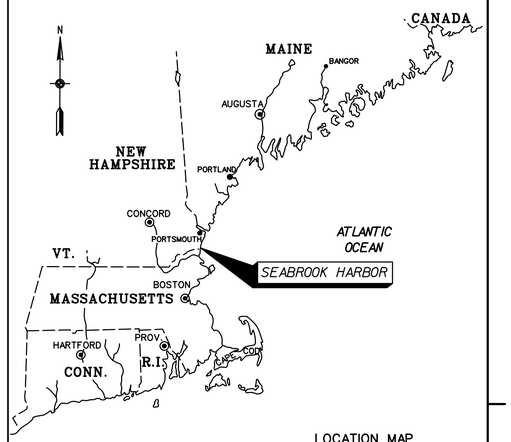

LOCATION MAP
NOT TO SCALE

NATIONAL SHORELINE EROSION CONTROL DEVELOPMENT AND DEMONSTRATION PROGRAM SEABROOK HARBOR

SEABROOK, NEW HAMPSHIRE

VALUE ENGINEERING PAYS DIVIDENDS

SAFETY PAYS

SOLICITATION # W912WJ-04-B-0004

SEE SPECIFICATIONS FOR DRAWING SIGNATURES

APPROVED FUNCTIONAL ADEQUACY DUBAN MONTOYA /s/ TECHNICAL LEAD ENGINEER DATE:	RECOMMENDED BY: H. FARRELL MCMILLAN, P.E. /s/ DEPUTY CHIEF, E/P DIV DATE:
REVIEWED BY: ANTHONY T. MACKOS, P.E. /s/ CHIEF, DESIGN BRANCH DATE:	APPROVED BY: DAVID L. DULONG, P.E. /s/ 5/17/04 CHIEF, ENGRG/PLANNING DIV DATE:
REVIEWED BY: RAIMO LIIAS, P.G. /s/ CH, HTRW/GEOTECH ENGRG BR DATE:	

U.S. ARMY ENGINEER DISTRICT
CORPS OF ENGINEERS
CONCORD, MASSACHUSETTS

THIS PROJECT WAS DESIGNED BY THE NEW ENGLAND DISTRICT OF THE U.S. ARMY CORPS OF ENGINEERS. THE INITIALS OR SIGNATURES AND REGISTRATION DESIGNATIONS OF INDIVIDUALS APPEARING ON THESE PROJECT DOCUMENTS, WITHIN THE SCOPE OF THEIR EMPLOYMENT AS REQUIRED BY ER 110-1-8152.

NATIONAL SHORELINE EROSION CONTROL
DEVELOPMENT AND DEMONSTRATION PROGRAM
SEABROOK, NEW HAMPSHIRE

COVER SHEET

Reference number:
G-1

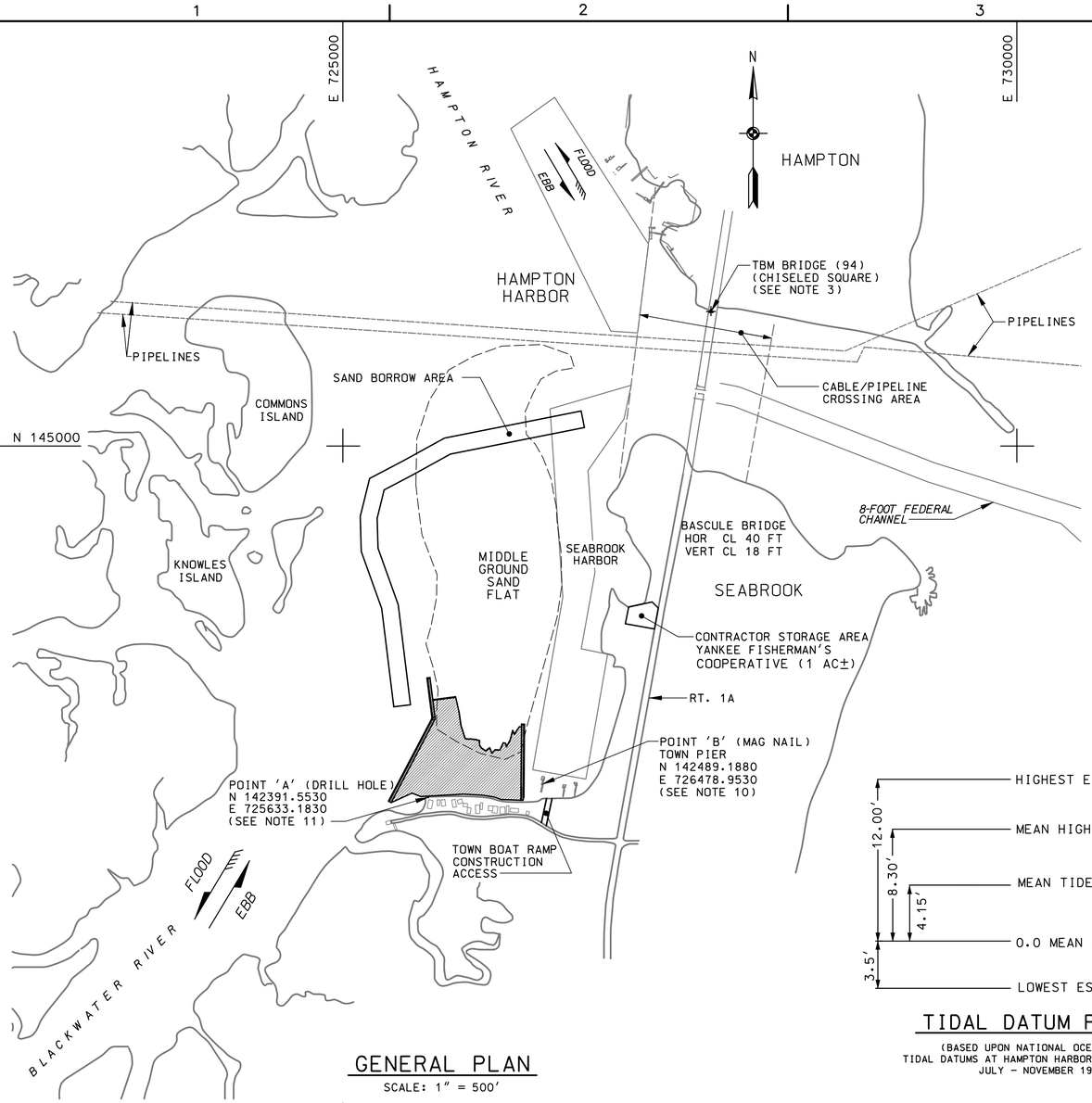

GENERAL PLAN

SCALE: 1" = 500'

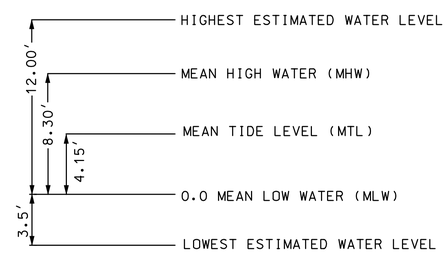

TIDAL DATUM PLANES

(BASED UPON NATIONAL OCEAN SURVEY
TIDAL DATUMS AT HAMPTON HARBOR, NEW HAMPSHIRE
JULY - NOVEMBER 1931)

GENERAL NOTES:

1. SOUNDINGS ARE IN FEET AND TENTHS AND REFER TO THE PLANE OF MEAN LOW WATER (MLW).
2. TOPOGRAPHY SHOWN IS FROM PREVIOUS SURVEYS AND/OR NOAA CHART NO. 13278. ALL TOPOGRAPHY, INCLUDING SHORELINE, BRIDGES, PIERS, ETC., IS APPROXIMATE UNLESS OTHERWISE NOTED. TOPOGRAPHY SHOULD BE USED AS A GENERAL REFERENCE ONLY.
3. BENCH MARK DATA:TBM BRIDGE (94) IS A CHISELED SQUARE ON A CONCRETE ABUTMENT LOCATED ON THE NORTHWEST CORNER OF THE ROUTE 1 DRAWBRIDGE. ELEVATION IS 26.08 FEET ABOVE MLW.
4. COORDINATES SHOWN ARE BASED ON THE TRANSVERSE MERCATOR GRID SYSTEM FOR THE STATE OF NEW HAMPSHIRE & NAD 1927.
5. THE SOUNDING INFORMATION SHOWN ON THESE DRAWINGS REPRESENT THE SHOALEST SOUNDINGS OF THOSE OBTAINED FROM HYDROGRAPHIC SURVEYS CONDUCTED DURING AUG. AND SEPT. 2002.
6. [DELETED]
7. THE INFORMATION DEPICTED ON THIS MAP REPRESENTS THE RESULTS OF SURVEYS MADE ON THE DATES INDICATED, AND CAN ONLY BE CONSIDERED AS INDICATING THE GENERAL CONDITIONS EXISTING AT THAT TIME.
8. FIELD BOOK: R&H 4203. DEPTHSOUNDER ROLLS: 02-615-01 THRU. 02-615-04 SEE NOAA CHART NO. 13278.
9. SHEETING SECTION AND INTERLOCK TYPE SHOWN ON THESE DRAWINGS ARE INTENDED TO SHOW THE GENERAL ARRANGEMENT OF THE SHEETPILE WALLS. SEE SPECIFICATION SECTION 02465.
10. POINT 'B' IS A MAG NAIL SET IN THE WIDE PART NEAR THE END OF THE TOWN PIER ON RIVER STREET. ELEVATION IS 13.61 ABOVE MLW.
11. POINT 'A' IS A SHALLOW 1/4" DRILL HOLE IN A CONCRETE BLOCK SEAWALL BEHIND THE LAST HOUSE ON THE NORTH SIDE OF RIVER STREET ON THE CORNER. ELEVATION IS 11.87 ABOVE MLW.

LEGEND

EXISTING	NEW	DESCRIPTION
		HORIZONTAL CONTROL POINT
		SAND FILL BETWEEN EAST & WEST BULKHEADS
		SAND FILL WITHIN BULKHEAD WALLS
+2.8		SPOT ELEVATIONS (MLW)
		CONTOURS
		EXISTING RIP RAP - REMOVED & REPLACED
		STONE MATTRESS
	P-1	PROBE
	B-1	BORING
		12" DIA. PILE
		LOAD CELL/DEFORMATION MONITORING PT

INDEX TO DRAWINGS

DRAWING CODE: SEA-1

SHEET NO.		FILE NAME	TITLE
1	G-1	seagbs.dgn	COVER SHEET
2	C-1	seac101.s02	GENERAL PLAN, NOTES, LEGEND, TIDAL DATUM AND INDEX
3	C-2	seac102a.s03	PLAN - BULKHEAD / SANDFILL
4	C-3	seac104.s04	ELEVATIONS AND SECTIONS
5	C-4	seac105.s05	DETAILS - SCOUR PROTECTION/BASELINE CURVE
6	C-5	seac103a.s06	SAND BORROW AREA PLAN & SECTIONS
7	S-1	seas501.s07	KEY PLANS AND TYPICAL SECTION
8	S-2	seas502.s08	STRUCTURAL DETAILS #1
9	S-3	seas503.s09	STRUCTURAL DETAILS #2
10	S-4	seas504.s10	STRUCTURAL DETAILS #3

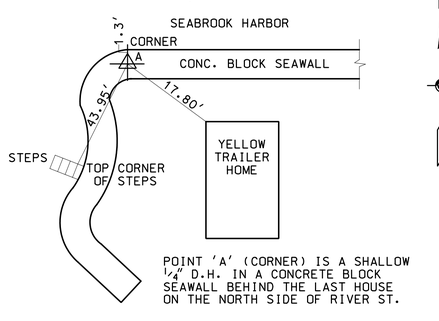

TIE SKETCH 1 POINT 'A'

N.T.S.

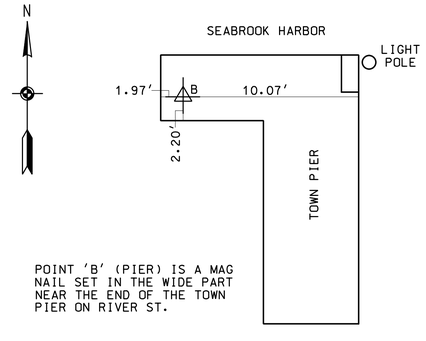

TIE SKETCH 2 POINT 'B'

N.T.S.

GRAPHIC SCALE:
500 0 500 1000
1" = 500'

US Army Corps of Engineers
New England District

Symbol	Description	Date	Appr.	Symbol	Description	Date	Appr.

Date: 5/17/2004 | Rev.
Design file no. seac101.s02
Drawing code: SEA-1
File name:
Plot date: 5/19/04
Plot scale: 1" = 500'

Designed by: Bob Meader
Drawn by: Bob Holt
ITR Review 4/14/2004
Submitted by: Joe Lamparo /s/ Chief, Civil Engrg Sect

U.S. ARMY ENGINEER DISTRICT
CORPS OF ENGINEERS
CONCORD, MASSACHUSETTS

NATIONAL SHORELINE EROSION CONTROL DEVELOPMENT AND DEMONSTRATION PROGRAM
SEABROOK, NEW HAMPSHIRE

GENERAL PLAN, NOTES, LEGEND, TIDAL DATUM AND INDEX

Reference number:
C-1

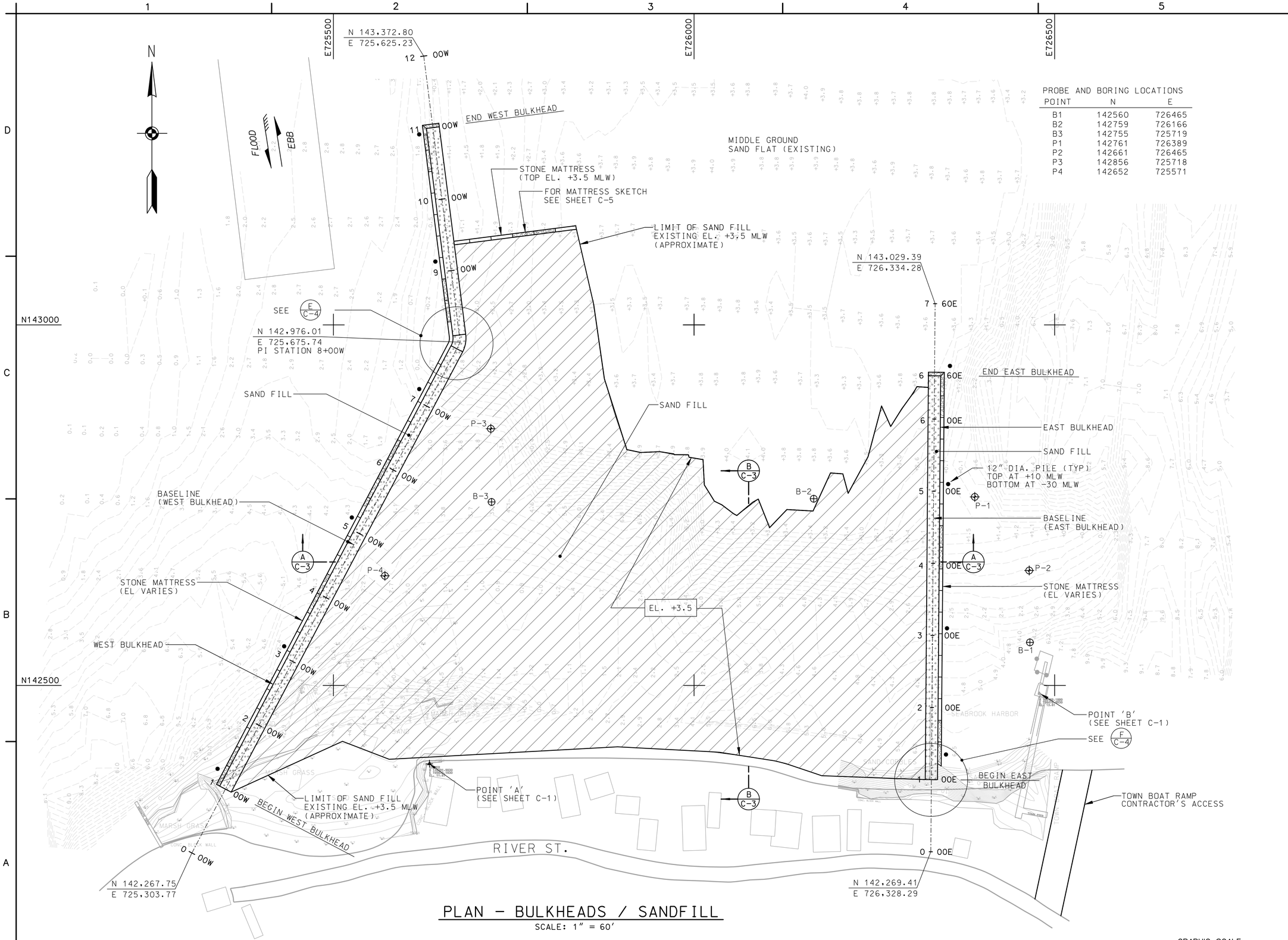

PROBE AND BORING LOCATIONS

POINT	N	E
B1	142560	726465
B2	142759	726166
B3	142755	725719
P1	142761	726389
P2	142661	726465
P3	142856	725718
P4	142652	725571

PLAN – BULKHEADS / SANDFILL

SCALE: 1" = 60'

US Army Corps of Engineers
New England District

Symbol	Description	Date	Appr.	Symbol	Description	Date	Appr.

U.S. ARMY ENGINEER DISTRICT
CORPS OF ENGINEERS
CONCORD, MASSACHUSETTS

Designed by: Bob Meader
Drawn by: Bob Holt
ITR Review 4/14/2004
Submitted by: Joe Lamparo /s/ Chief, Civ Engrg Sect
Date: 5/17/2004
Design file no. Sea3f02a.s03
Drawing code: SEA-1
File name:
Plot date: 5/19/04
Plot scale: 1" = 60'
Rev.

NATIONAL SHORELINE EROSION CONTROL
DEVELOPMENT AND DEMONSTRATION PROGRAM
SEABROOK, NEW HAMPSHIRE

PLAN - BULKHEAD / SANDFILL

Reference number:
C-2
Sheet 3 of 10

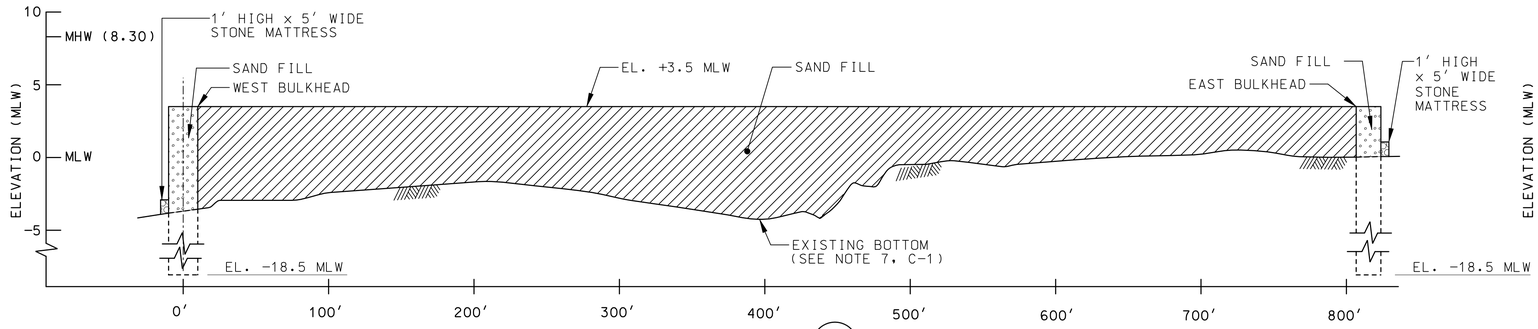

SECTION A / C-2

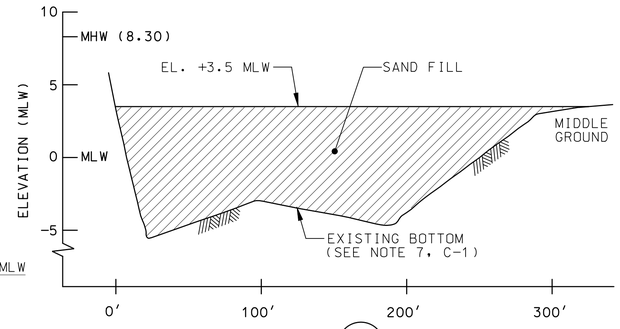

SECTION B / C-2

SECTIONS

HORIZONTAL: 1" = 50'
VERTICAL: 1" = 5'

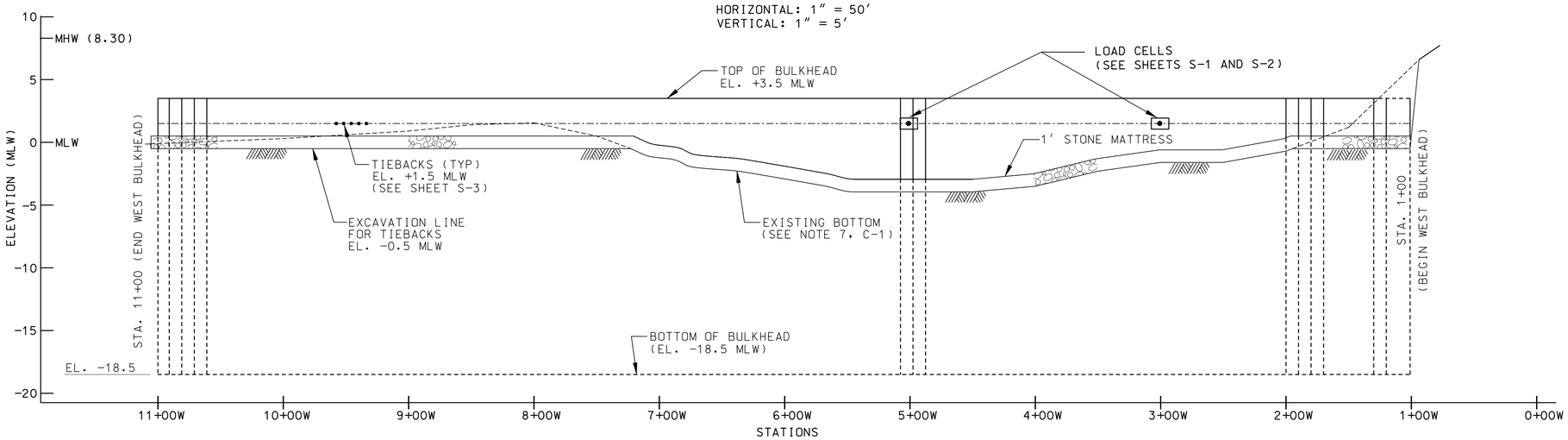

WEST BULKHEAD

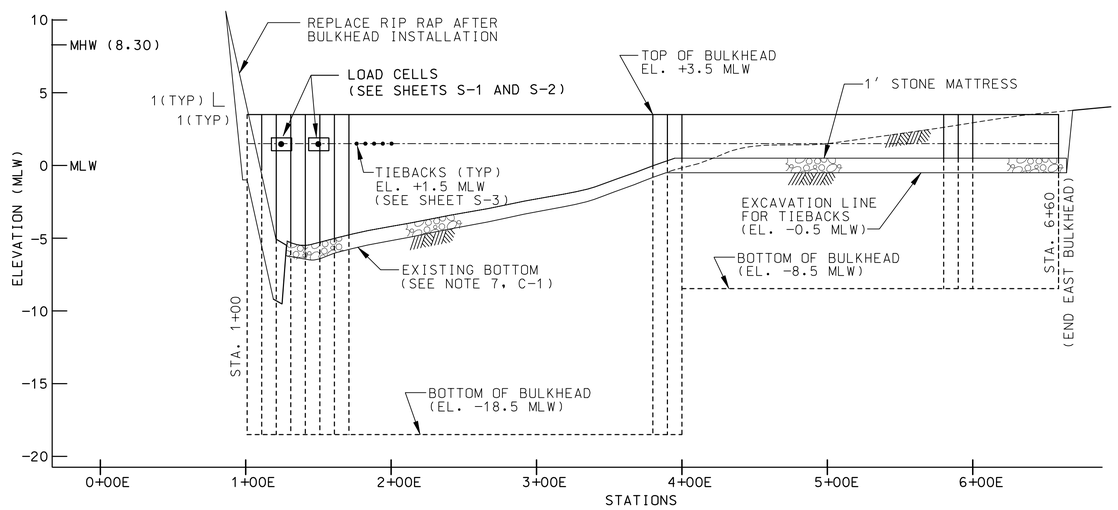

EAST BULKHEAD

BULKHEAD ELEVATIONS

HORIZONTAL: 1" = 50'
VERTICAL: 1" = 5'

GRAPHIC SCALE: 1" = 5' (5 0 5 10)

GRAPHIC SCALE: 1" = 50' (50 0 50 100)

US Army Corps of Engineers
New England District

Symbol	Description	Date	Appr.	Symbol	Description	Date	Appr.

Date: 5/17/2004 | Rev.
Design file no.: Sea0104 a05
Drawing code: SEA-1
File name:
Plot date: 5/19/04
Plot scale: 1" = 50'

Designed by: Bob Meader
Drawn by: Richelle Griffith/Bob Holt
ITR Review 4/14/2004
Submitted by: Joe Lumpara /s/ Chief, Civil Engrg. Sect.

U.S. ARMY ENGINEER DISTRICT
CORPS OF ENGINEERS
CONCORD, MASSACHUSETTS

NATIONAL SHORELINE EROSION CONTROL DEVELOPMENT AND DEMONSTRATION PROGRAM
SEABROOK, NEW HAMPSHIRE

ELEVATIONS AND SECTIONS

Reference number:
C-3

Sheet 4 of 10

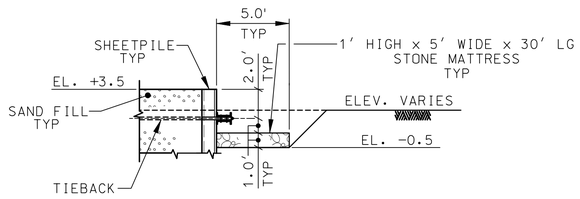

STA 4+05E TO STA 6+60E
SCALE: 1"=5'

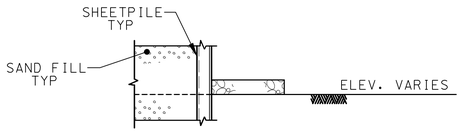

STA 1+20E TO STA 4+05E
SCALE: 1"=5'

EAST BULKHEAD

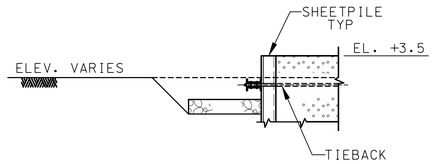

STA 7+23W TO STA 11+00W
SCALE: 1"=5'

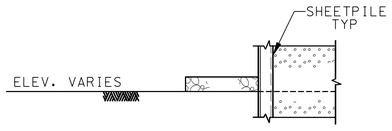

STA 1+95W TO STA 7+23W
SCALE: 1"=5'

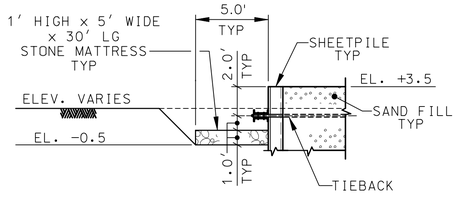

STA 1+00W TO STA 1+95W
SCALE: 1"=5'

WEST BULKHEAD

SECTIONS
SCOUR PROTECTION
SCALE: 1"=5'

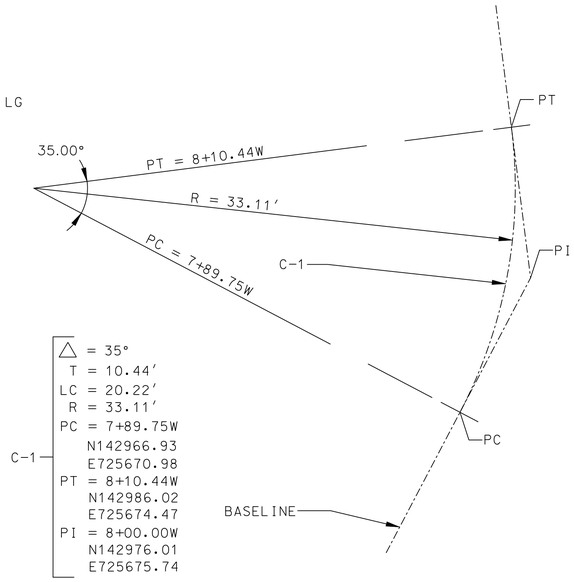

CURVE DETAIL
SCALE: 1"=5'
E
C-2

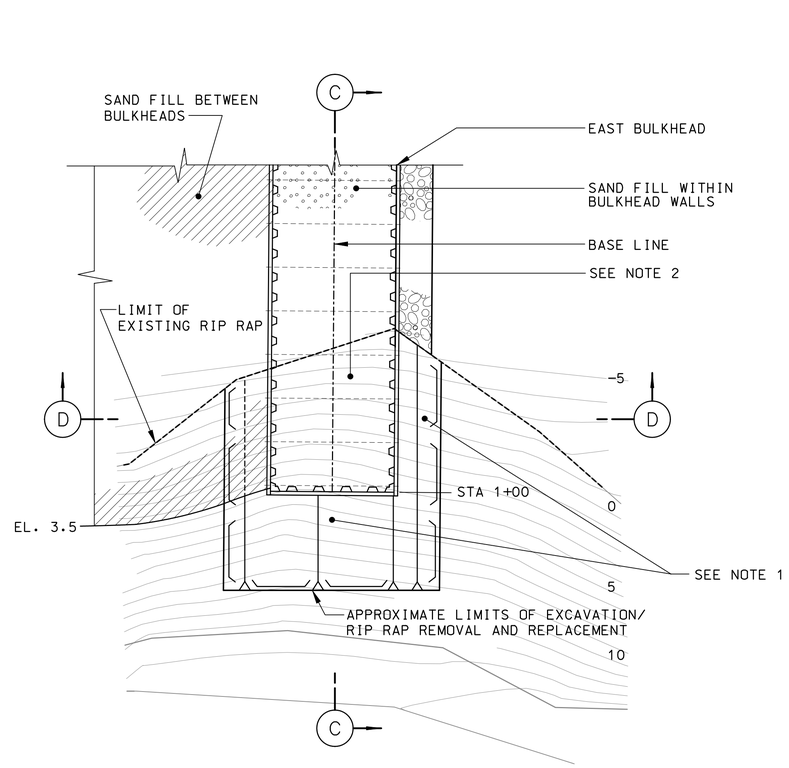

PLAN
SCALE: 1"=10'
F
C-2

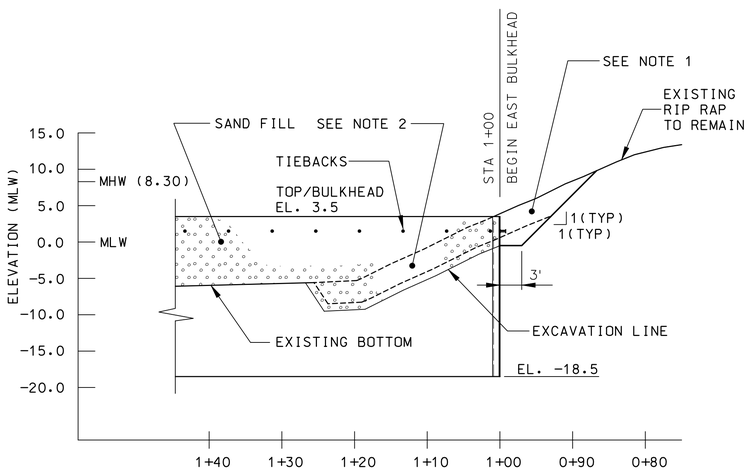

SECTION C-C
SCALE: 1"=10'

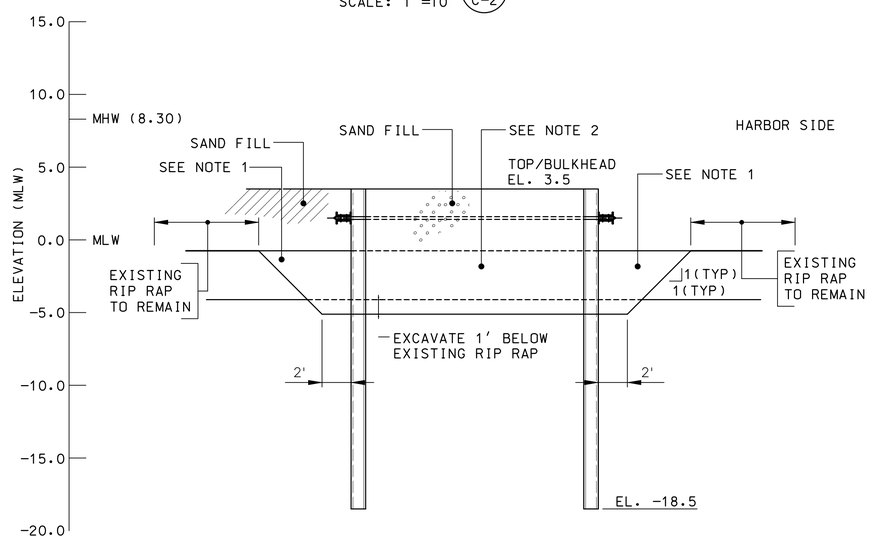

SECTION D-D
SCALE: 1"=5'

NOTES:

1. EXISTING RIP RAP TO BE REMOVED PRIOR TO INSTALLING SHEETPILE. REPLACE RIP RAP AFTER BULKHEAD INSTALLATION AND BEFORE PLACING SANDFILL.
2. EXISTING RIP RAP TO BE REMOVED PRIOR TO INSTALLING SHEETPILE AND REPLACED WITH SAND FILL WITHIN BULKHEAD WALLS AFTER INSTALLATION.

GRAPHIC SCALE:
1" = 5' 5 0 5 10
1" = 10' 10 0 10 20

US Army Corps of Engineers
New England District

Symbol	Description	Date	Appr.	Symbol	Description	Date	Appr.

Rev.
Date: 5/17/2004
Design file no. Sec0705.s06
Drawing code: SEA-1
File name:
Plot date: 5/19/04
Plot scale: 1" = 50'

Designed by: Bob Meeder
Drawn by: Bob Holt
ITR Review 4/14/2004
Submitted by: Joe Lomparo /s/ Chief, General Engrg Sect

U.S. ARMY ENGINEER DISTRICT
CORPS OF ENGINEERS
CONCORD, MASSACHUSETTS

NATIONAL SHORELINE EROSION CONTROL DEVELOPMENT AND DEMONSTRATION PROGRAM
SEABROOK, NEW HAMPSHIRE

DETAILS - SCOUR PROTECTION
BASELINE CURVE

Reference number:
C-4
Sheet 5 of 10

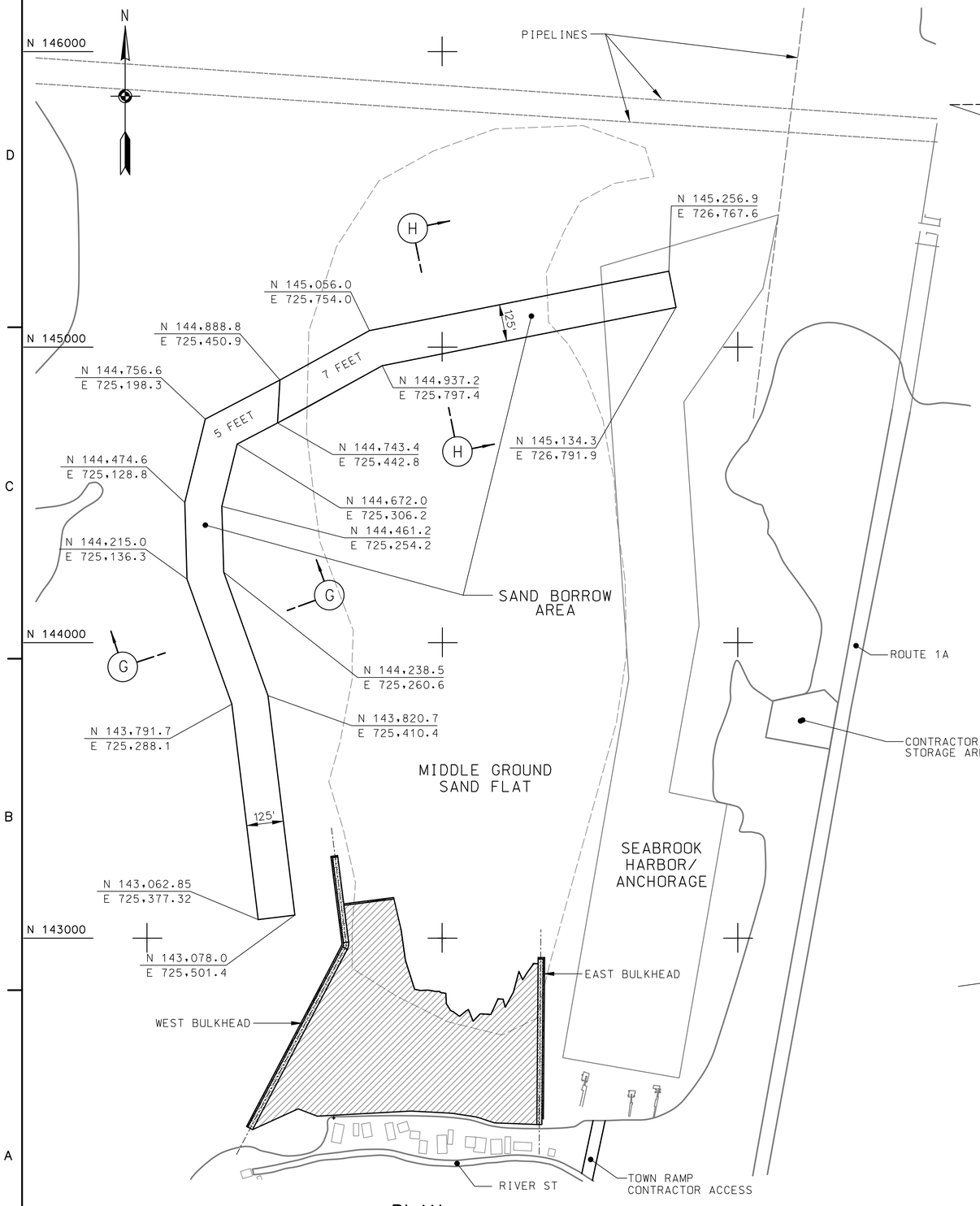

PLAN

SCALE: 1"=200'

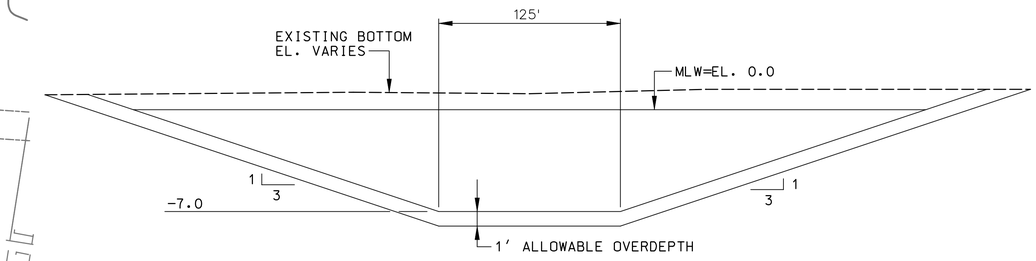

SECTION H-H

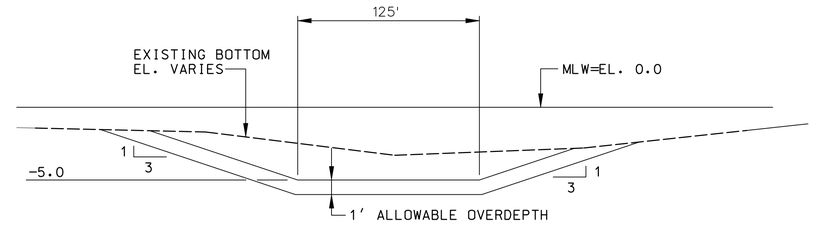

SECTION G-G

SECTIONS

SCALE: HOR. 1"=50'
SCALE: VERT. 1"=5'

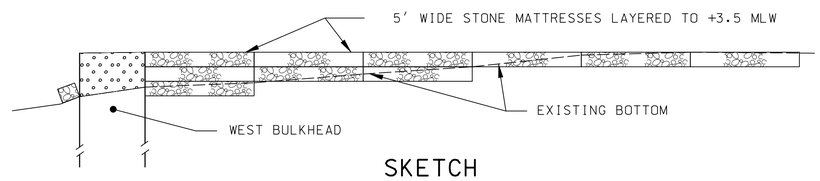

SKETCH

SCALE: HOR. 1"=20'
SCALE: VERT. 1"=5'

GRAPHIC SCALE:

1" = 5' 5 0 5 10
1" = 20' 20 0 20 40
1" = 50' 50 0 50 100
1" = 200' 200 0 200 400

US Army Corps of Engineers
New England District

Symbol	Description	Date	Appr.	Symbol	Description	Date	Appr.

Designed by: Bob Meader
Drawn by: Bob Holt
ITR Review 4/14/2004
Submitted by: Joe Lamparo /s/ Chief, Civil Eng'g Sect.
Date: 5/17/2004
Rev.
Design file no. Sec0103a.s04
Drawing code: SEA-1
File name:
Plot date: 5/19/04
Plot scale: 1" = 200'

U.S. ARMY ENGINEER DISTRICT
CORPS OF ENGINEERS
CONCORD, MASSACHUSETTS

NATIONAL SHORELINE EROSION CONTROL DEVELOPMENT AND DEMONSTRATION PROGRAM
SEABROOK, NEW HAMPSHIRE

SAND BORROW AREA
PLAN & SECTIONS

Reference number:
C-5

Sheet 6 of 10

STRUCTURAL NOTES:

1. SHEET PILINGS FOR BULKHEADS SHALL BE "Z" SECTION WITH MECHANICAL AND PHYSICAL PROPERTIES AS INDICATED IN SPECIFICATION SECTION 02456.

2. ALL WALES, TIEBACKS, TURNBUCKLES, PLATES, AND FASTENERS SHALL BE HOT DIPPED GALVANIZED.

3. INTERIOR CROSS WALLS MAY BE INSTALLED IN THE BULKHEADS TO FACILITATE CONSTRUCTION SEQUENCING. THE NUMBER AND LOCATION OF CROSS WALLS (AS SHOWN ON S-4) SHALL BE SELECTED AT THE OPTION OF THE CONTRACTOR. SEE SPECIFICATIONS FOR CONSTRUCTION SEQUENCE REQUIREMENTS.

4. FURNISH AND INSTALL LOAD CELLS ON TIEBACKS AT THE APPROXIMATE LOCATIONS INDICATED BELOW:

WEST BULKHEAD	3+00, 5+00
EAST BULKHEAD	1+25, 1+50

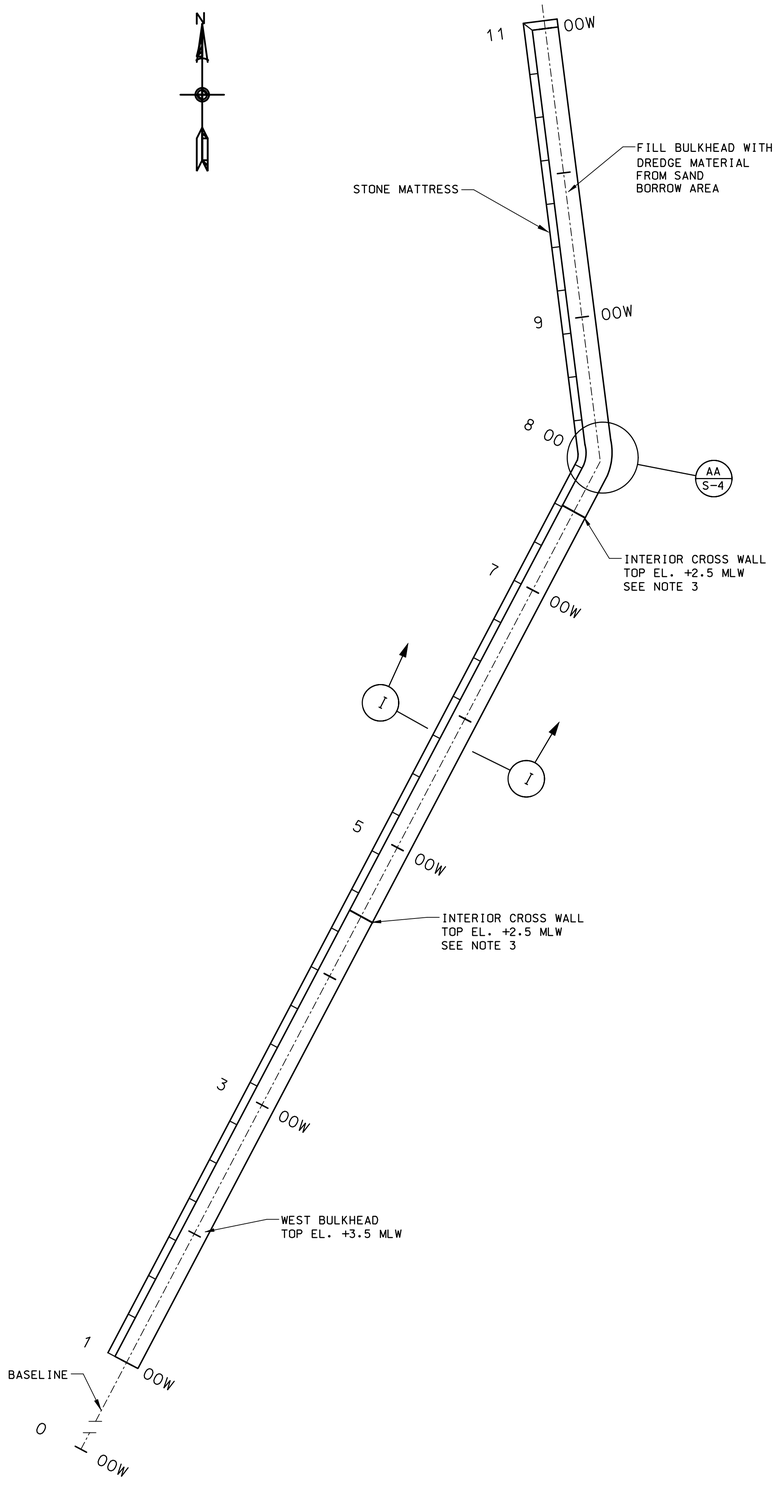

KEY PLAN WEST BULKHEAD

SCALE: 1" = 50'- 0"

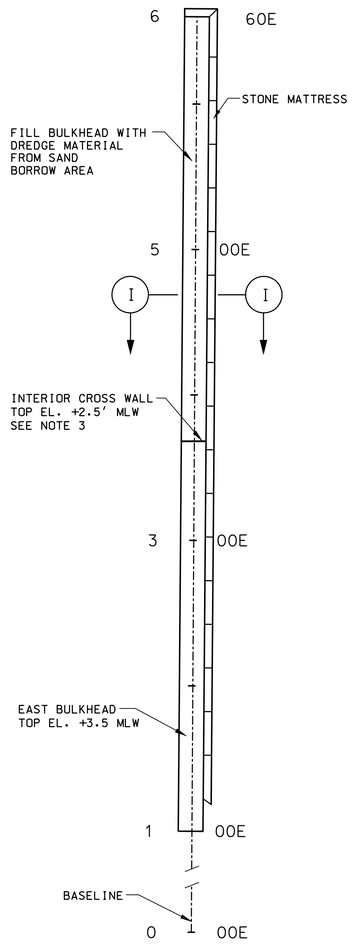

KEY PLAN EAST BULKHEAD

SCALE: 1" = 50'- 0"

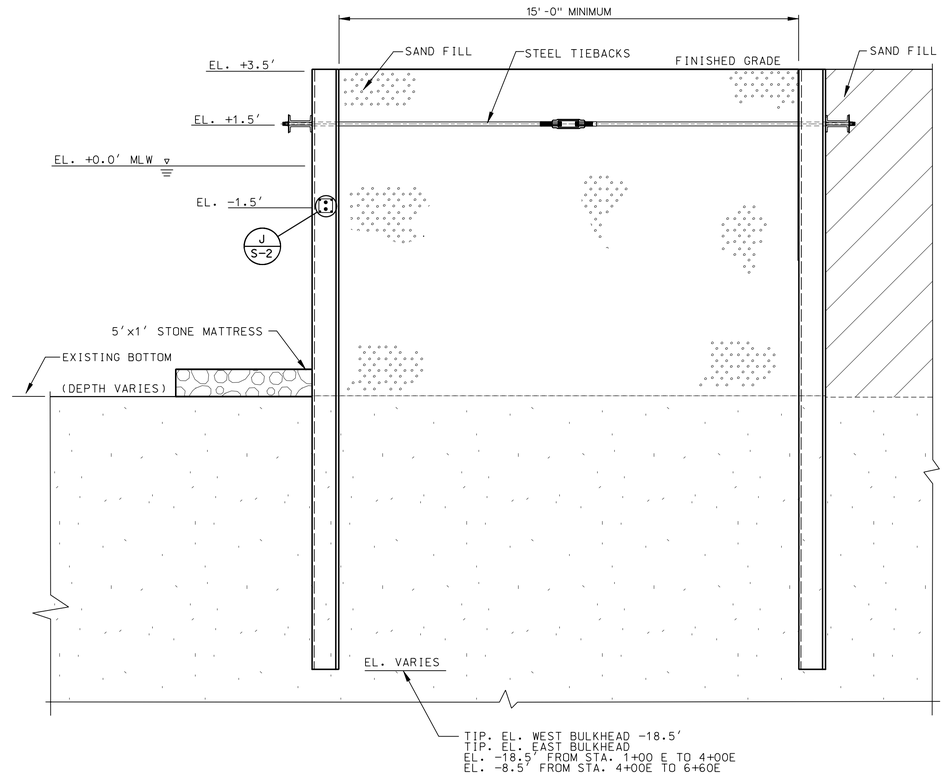

SECTION I-I

SCALE: 3/8" = 1'- 0"

GRAPHIC SCALE:
1" = 50' — 50 0 50 100

GRAPHIC SCALE:
3/8" = 1'-0" — 4' 0 4'

US Army Corps of Engineers
New England District

Symbol	Description	Date	Appr.	Symbol	Description	Date	Appr.

Designed by: FRANCIS FUNG
Drawn by: DON HASSETT
ITR Review 4/14/2004
Submitted by: Dave Descoteaux /s/ Chief, General Engrg. Sect.
Date: 5/17/2004
Design file no. SAS501.sa07
Drawing code: SEA-1
File name:
Plot date: 5/19/04
Plot scale: 1" = 0' - 1"
Rev. 0

U.S. ARMY ENGINEER DISTRICT
CORPS OF ENGINEERS
CONCORD, MASSACHUSETTS

NATIONAL SHORELINE EROSION CONTROL DEVELOPMENT AND DEMONSTRATION PROGRAM
SEABROOK, NEW HAMPSHIRE

KEY PLANS AND TYPICAL SECTION

Reference number:
S-1
Sheet 7 of 10

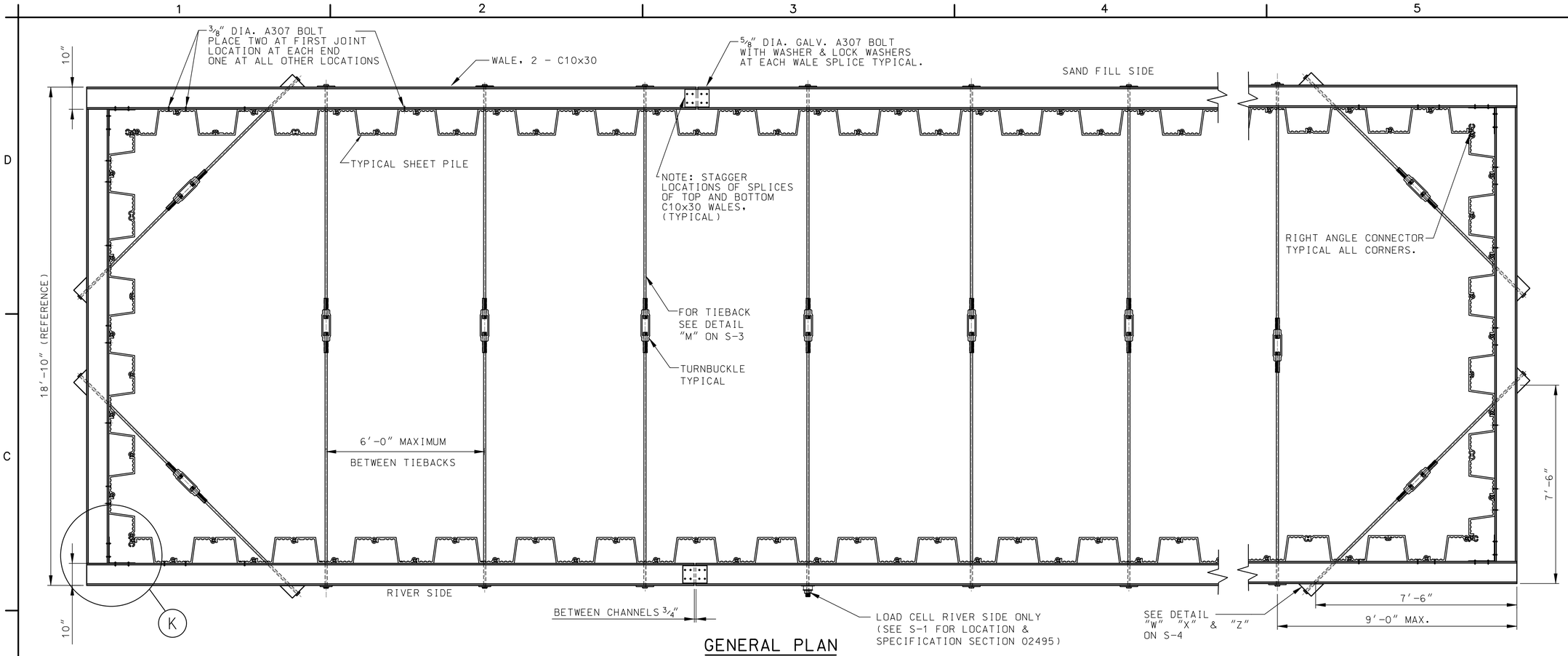

GENERAL PLAN
PLAN VIEW

SCALE: 1/2" = 1'- 0"

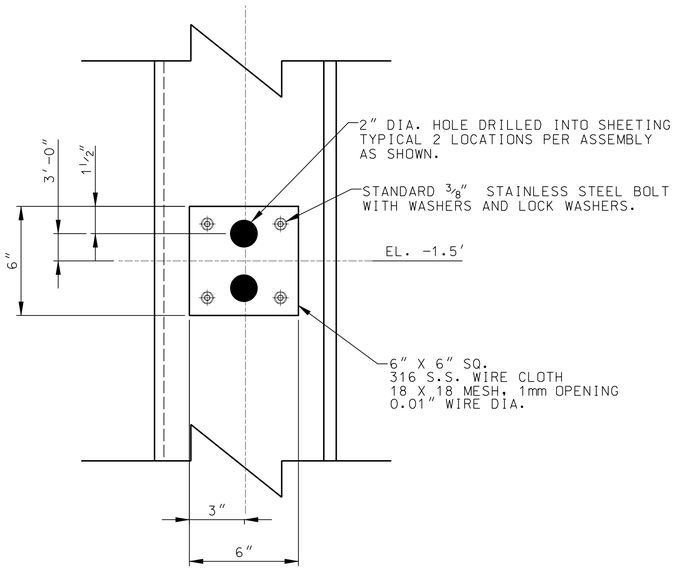

TYPICAL DRAIN DETAIL J

SCALE: 3" = 1'- 0"

NOTE: PLACE ONE DRAIN ASSEMBLY
IN EVERY FOURTH SHEET PILE
ALONG RIVER SIDE ONLY.

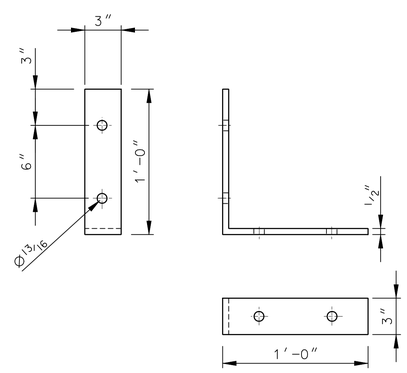

TYPICAL END BRACKET DETAIL
DETAIL L

SCALE: 2" = 1'- 0"

MATERIAL: STEEL, HOT DIPPED GALVANIZED.

NOTE: THIS BRACKET IS USED
AT ALL CORNERS.
ALL DIMENSIONS TYPICAL.

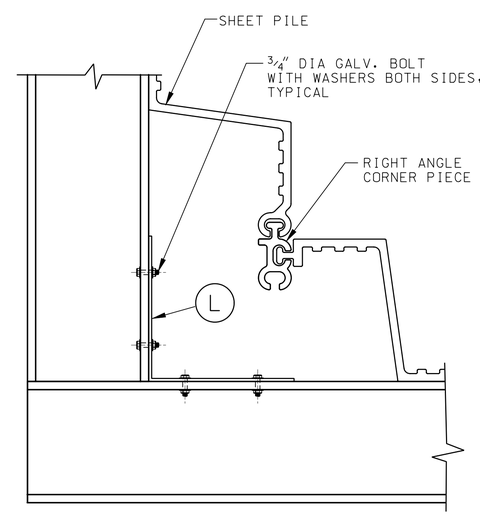

TYPICAL CORNER CONNECTION
DETAIL K

SCALE: 2" = 1'- 0"

GRAPHIC SCALE:
1/2" = 1'-0" 1' 0 1' 2' 3' 4' 5'

GRAPHIC SCALE:
2" = 1'-0" 6" 0 6" 1'

GRAPHIC SCALE:
3" = 1'-0" 3" 0 3" 6" 9"

US Army Corps of Engineers
New England District

Symbol	Description	Date	Appr.	Symbol	Description	Date	Appr.

Date: 5/17/2004
Rev. 0
Design file no. SEAS502.s08
Drawing code: SEA-1
File name:
Plot date: 5/19/04
Plot scale: 1/8" = 1' - 0"

Designed by: FRANCIS FUNG
Drawn by: DON HASSETT
ITR Review 4/14/2004
Submitted by: Dove Descoteaux /s/ Chief, General Engrg Sect

U.S. ARMY ENGINEER DISTRICT
CORPS OF ENGINEERS
CONCORD, MASSACHUSETTS

NATIONAL SHORELINE EROSION CONTROL
DEVELOPMENT AND DEMONSTRATION PROGRAM
SEABROOK, NEW HAMPSHIRE

STRUCTURAL DETAILS #1

Reference number:
S-2

Sheet 8 of 10

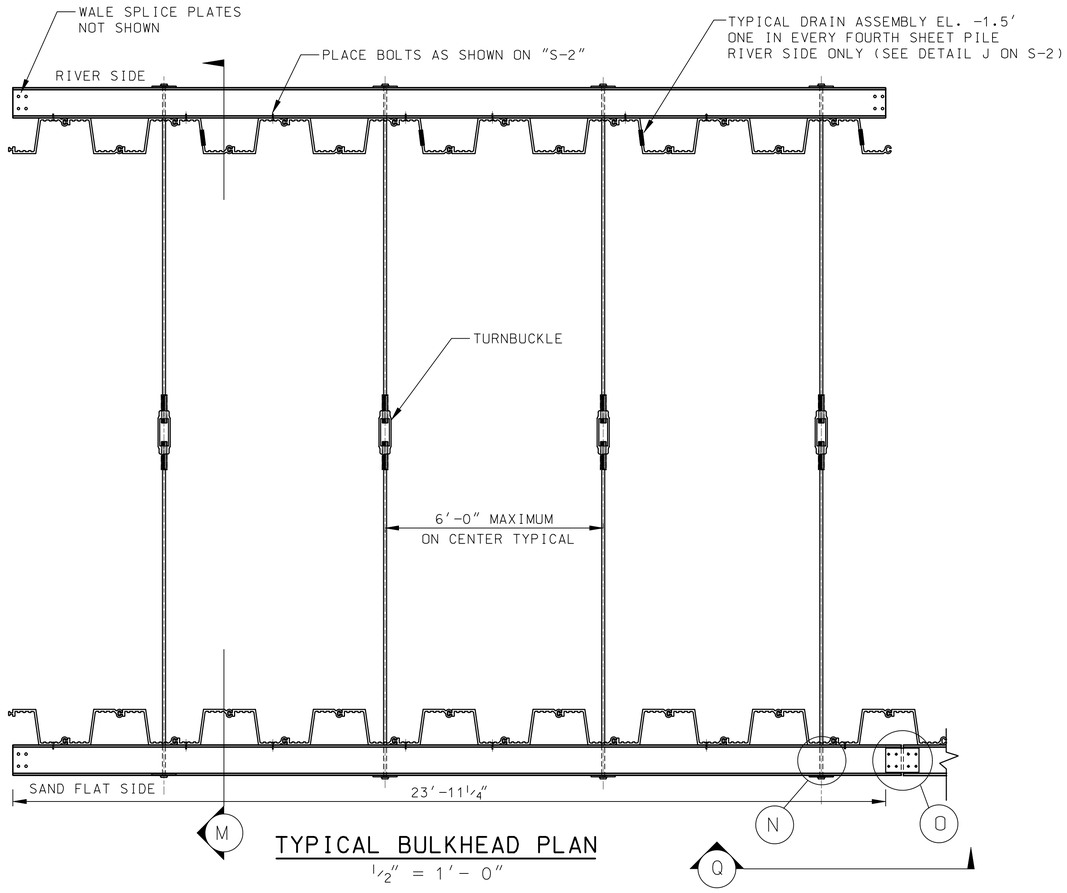

TYPICAL BULKHEAD PLAN

1/2" = 1'-0"

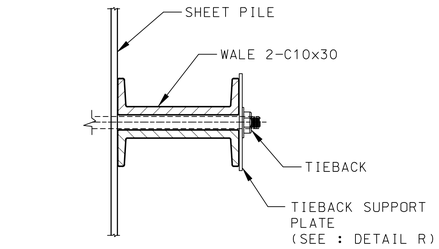

SECTION S

1" = 1'-0"

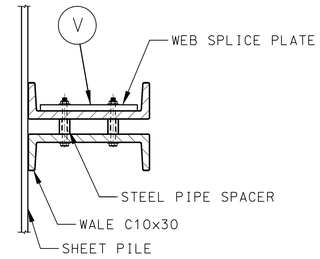

SECTION T

1" = 1'-0"

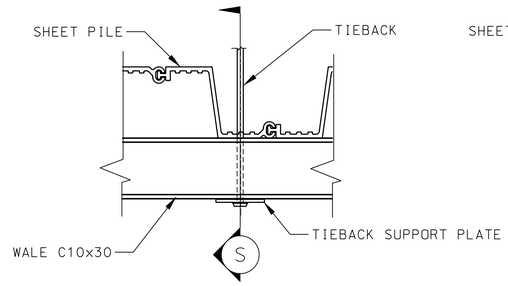

DETAIL N

1/2" = 1'-0"

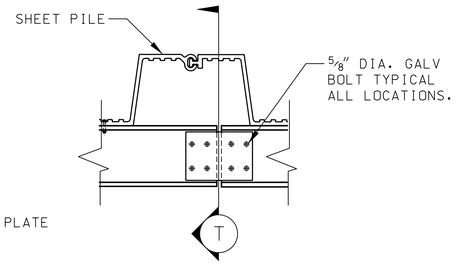

DETAIL O

1/2" = 1'-0"

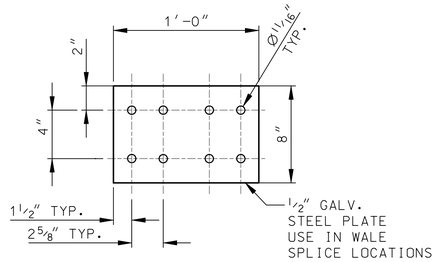

WEB SPLICE PLATE DETAIL V

1" = 1'-0"

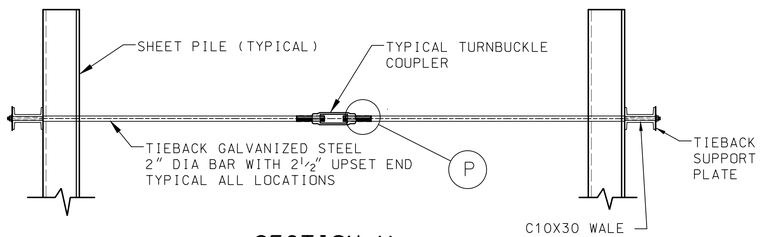

SECTION M

1/2" = 1'-0"

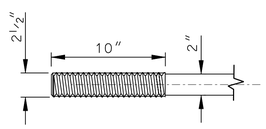

TIEBACK DETAIL P

2" = 1'-0"

TIEBACK HEAD
MATERIAL: GALVANIZED STEEL

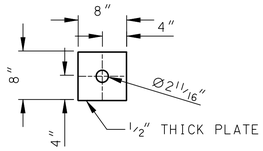

DETAIL R

1" = 1'-0"

TIEBACK SUPPORT PLATE
MATERIAL: GALVANIZED STEEL

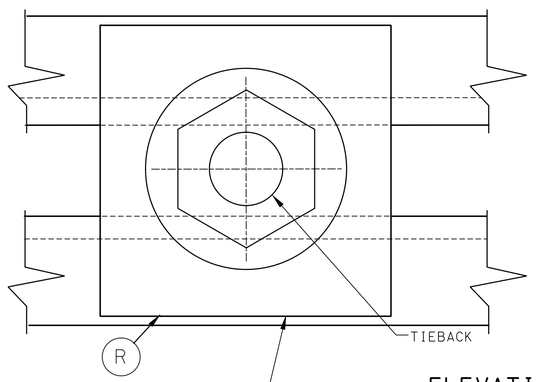

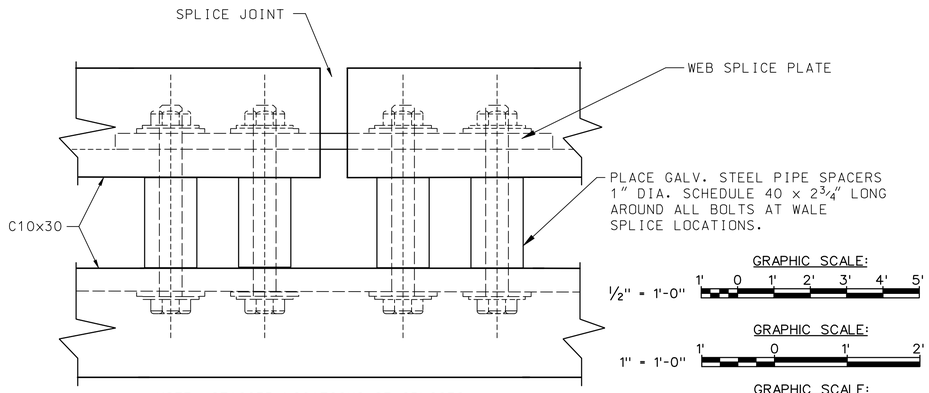

NOTE: STAGGER LOCATIONS OF SPLICES
IN TOP AND BOTTOM WALES.

ELEVATION VIEW Q

6" = 1'-0"

GRAPHIC SCALE:
1/2" = 1'-0" 1' 0 1' 2' 3' 4' 5'

GRAPHIC SCALE:
1" = 1'-0" 1' 0 1' 2'

GRAPHIC SCALE:
2" = 1'-0" 1/2' 0 1/2' 1'

GRAPHIC SCALE:
6" = 1'-0" 1 1/2" 0 1 1/2" 3" 6"

US Army Corps of Engineers
New England District

Symbol	Description	Date	Appr.	Symbol	Description	Date	Appr.

Designed by: FRANCIS FUNG
Drawn by: DON HASSETT
ITR Review 4/14/2004
Submitted by: Dave Descoteaux /s/ Chief, General Engrg Sect
Date: 5/17/2004
Rev. 0
Design file no. SEA5503.sd9
Drawing code: SEA-1
File name:
Plot date: 5/19/04
Plot scale: 1/8" = 1'-0"

U.S. ARMY ENGINEER DISTRICT
CORPS OF ENGINEERS
CONCORD, MASSACHUSETTS

NATIONAL SHORELINE EROSION CONTROL
DEVELOPMENT AND DEMONSTRATION PROGRAM
SEABROOK, NEW HAMPSHIRE

STRUCTURAL DETAILS #2

Reference number:
S-3

Sheet 9 of 10

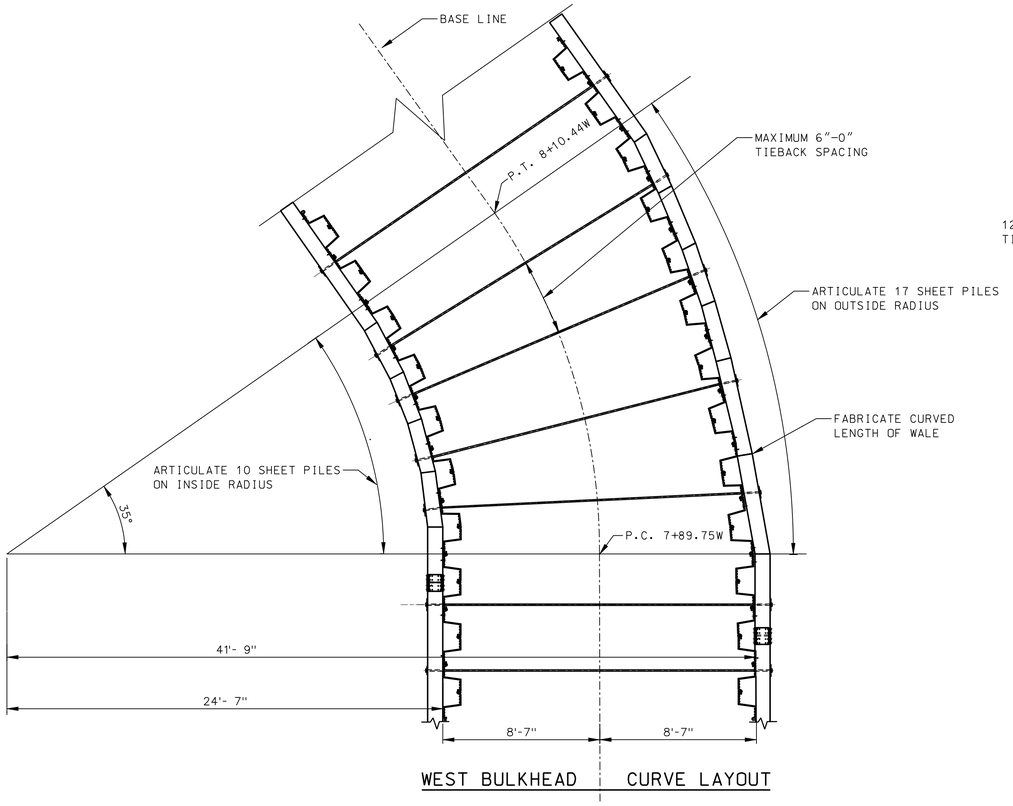

WEST BULKHEAD | CURVE LAYOUT

DETAIL AA (AA / S-1)

SCALE: 1/4" = 1'- 0"

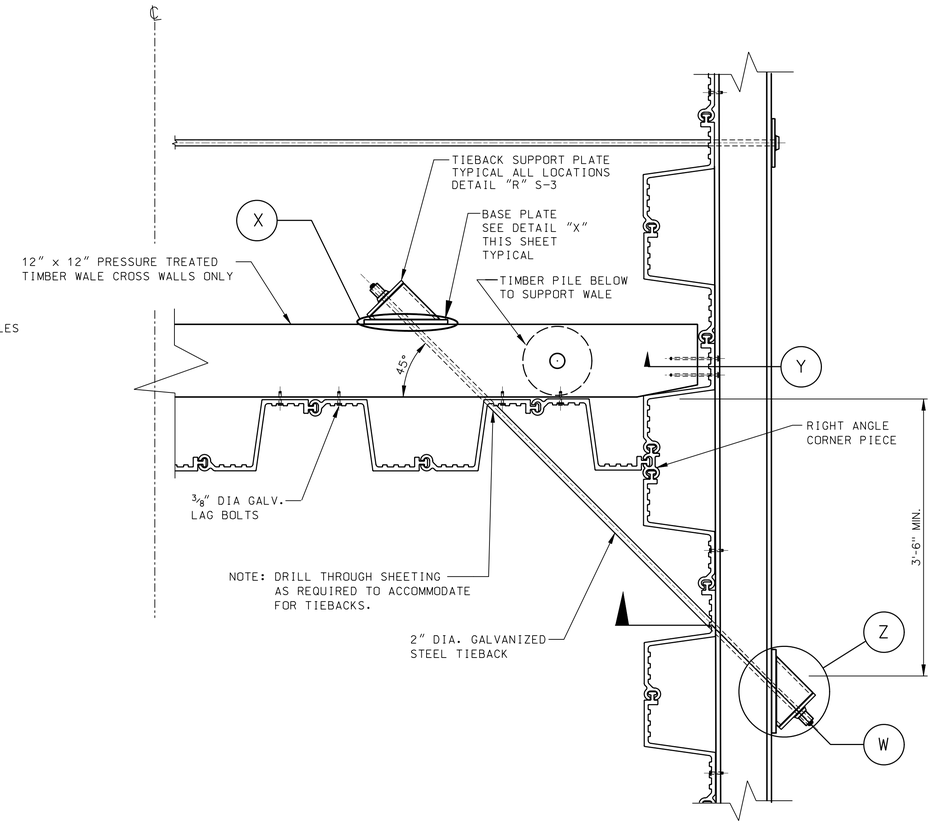

TYPICAL CROSS WALL DETAIL

SCALE: 1" = 1'- 0"

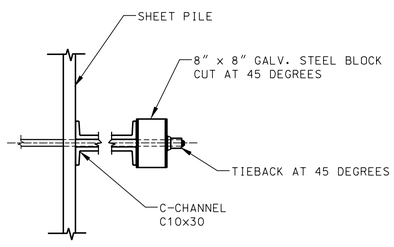

TYPICAL 45 DEGREE TIEBACK SECTION VIEW DETAIL W

SCALE: 1" = 1'- 0"

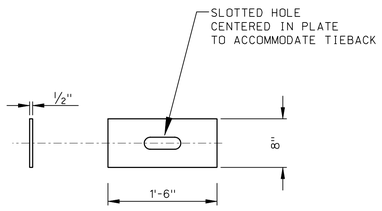

TYPICAL BASE PLATE PLAN VIEW DETAIL X

SCALE: 1" = 1'- 0"

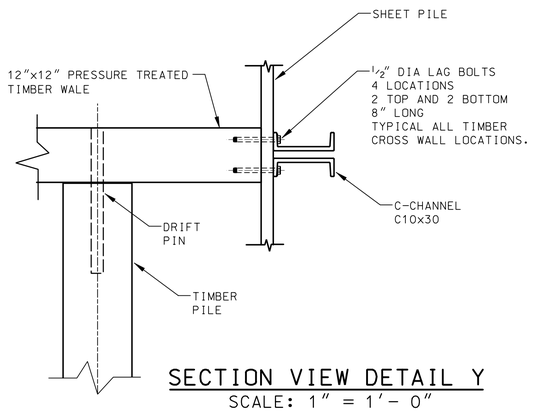

SECTION VIEW DETAIL Y

SCALE: 1" = 1'- 0"

THIS APPLICATION IS ONLY USED AT THE INTERIOR CROSS WALL CONNECTION.

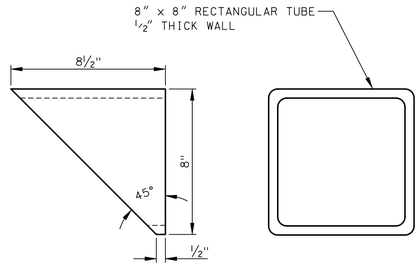

TYPICAL 8" x 8" STEEL BLOCK DETAIL Z

SCALE: 3" = 1'- 0"

GRAPHIC SCALE: 1" = 1'-0" (1' 0 2' 3')

GRAPHIC SCALE: 1/4" = 1'-0" (4' 0 4' 8')

GRAPHIC SCALE: 3" = 1'-0" (3" 0 3" 6" 9")

US Army Corps of Engineers
New England District

Symbol	Description	Date	Appr.	Symbol	Description	Date	Appr.

Designed by: FRANCIS FUNG
Drawn by: DON HASSETT
ITR Review 4/14/2004
Submitted by: Dave Descoteaux /s/ Chief, General Engrg Sect
Date: 5/17/2004
Design file no. SEAS504.S10
Drawing code: SEA-1
File name:
Plot date: 5/19/04
Plot scale: 1" = 0' - 1"
Rev. 0

U.S. ARMY ENGINEER DISTRICT
CORPS OF ENGINEERS
CONCORD, MASSACHUSETTS

NATIONAL SHORELINE EROSION CONTROL DEVELOPMENT AND DEMONSTRATION PROGRAM
SEABROOK, NEW HAMPSHIRE

STRUCTURAL DETAILS #3

Reference number: S-4

Sheet 10 of 10