PUBLIC NOTICE

US Army Corps of Engineers ®
New England District
696 Virginia Road
Concord, MA 01742-2751

Comment Period Begins: August 28, 2012
Comment Period Ends: September 27, 2012
File Number: NAE-2012-00398
In Reply Refer To: Brian Valiton
Phone: (978) 318-8166
E-mail: brian.e.valiton@usace.army.mil

The District Engineer has received a permit application to conduct work in waters of the United States as described below.

APPLICANT

New Bedford Harbor Development Commission (HDC), 52 Fisherman's Wharf, New Bedford, Massachusetts 02745

ACTIVITY

HDC proposes to develop a new boating facility in New Bedford Harbor between Tonneson Park on the New Bedford State Pier and Fisherman's Wharf. Specifically, HDC is proposing to install four 6' x 20' timber floats, one 6' x 12' timber float, one 8' x 10' timber float, a 30' x 4' gangway, and relocate a 10' x 30' timber float along the Fisherman's Wharf bulkhead and install ten 6' x 20' timber floats, three 6' x 30' timber floats, replace three timber piles, and relocate a 26' gangway along the Tonneson Park bulkhead. The 6' x 20 and 6' x 30' floats installed perpendicular to the Tononeson Park bulkhead will be anchored using helical anchors and elastic mooring rode. The project area was recently dredged during the New Bedford Phase III Navigational Dredge Project. The purpose of the project is to create a centralized vessel staging area for port security, support and commercial vessels. The boating facility would accommodate up to sixteen vessels ranging in size from 20 to 35 feet in length. A detailed description and plans of the activity are attached.

WATERWAY AND LOCATION OF THE PROPOSED WORK

This work is proposed in New Bedford Harbor at 216-228 MacArthur Drive, New Bedford, Massachusetts 02740. The site coordinates are: Latitude 41° 38' 08" N., Longitude 70° 55' 15" W.

AUTHORITY

Permits are required pursuant to:
_x_ Section 10 of the Rivers and Harbors Act of 1899
____ Section 404 of the Clean Water Act
____ Section 103 of the Marine Protection, Research and Sanctuaries Act).

The decision whether to issue a permit will be based on an evaluation of the probable impact of the proposed activity on the public interest. That decision will reflect the national concern for both protection and utilization of important resources. The benefit which may reasonably accrue from the proposal must be balanced against its reasonably foreseeable detriments. All factors which may be relevant to the proposal will be considered, including the cumulative effects thereof; among those are: conservation, economics, aesthetics, general environmental concerns, wetlands, cultural value, fish and wildlife values, flood hazards, flood plain value, land

use, navigation, shoreline erosion and accretion, recreation, water supply and conservation, water quality, energy needs, safety, food production and, in general, the needs and welfare of the people.

The Corps of Engineers is soliciting comments from the public; Federal, state, and local agencies and officials; Indian Tribes; and other interested parties in order to consider and evaluate the impacts of this proposed activity. Any comments received will be considered by the Corps of Engineers to determine whether to issue, modify, condition or deny a permit for this proposal. To make this decision, comments are used to assess impacts on endangered species, historic properties, water quality, general environmental effects, and the other public interest factors listed above. Comments are used in the preparation of an Environmental Assessment and/or an Environmental Impact Statement pursuant to the National Environmental Policy Act. Comments are also used to determine the need for a public hearing and to determine the overall public interest of the proposed activity.

ESSENTIAL FISH HABITAT

The Magnuson-Stevens Fishery Conservation and Management Act, as amended by the Sustainable Fisheries Act of 1996 (Public Law 104-267), requires all federal agencies to consult with the National Marine Fisheries Service on all actions, or proposed actions, permitted, funded, or undertaken by the agency, that may adversely affect Essential Fish Habitat (EFH).

This project will impact approximately 0.25 acre of Essential Fish Habitat (EFH) for haddock (eggs, larvae), Atlantic cod (juvenile, eggs, larvae, adult), little skate (adult), window pane flounder (eggs, larvae, juvenile, adult), winter flounder (larvae, eggs, juvenile, adult), Atlantic herring (juvenile, adult), red hake (adult, juvenile), albacore tuna (juvenile), bluefin tuna (adult), and Atlantic wolffish (all). This habitat consists of open water with a muddy silt substrate. However, the District Engineer has made a preliminary determination that the site-specific adverse effect will not be substantial. Further consultation with the National Marine Fisheries Service regarding EFH conservation recommendations is being conducted and will be concluded prior to the final decision.

NATIONAL HISTORIC PRESERVATION ACT

Based on his initial review, the District Engineer has determined that little likelihood exists for the proposed work to impinge upon properties with cultural or Native American significance, or listed in, or eligible for listing in, the National Register of Historic Places. Therefore, no further consideration of the requirements of Section 106 of the National Historic Preservation Act of 1966, as amended, is necessary. This determination is based upon one or more of the following:

a. The permit area has been extensively modified by previous work.
b. The permit area has been recently created.
c. The proposed activity is of limited nature and scope.
d. Review of the latest published version of the National Register shows that no presence of registered properties listed as being eligible for inclusion therein are in the permit area or general vicinity.
e. Coordination with the State Historic Preservation Officer and/or Tribal Historic Preservation Officer(s)

ENDANGERED SPECIES CONSULTATION

The New England District, Army Corps of Engineers has reviewed the list of species protected under the Endangered Species Act of 1973, as amended, which might occur at the project site. It is our preliminary

determination that the proposed activity for which authorization is being sought is designed, situated or will be operated/used in such a manner that it is not likely to adversely affect any Federally listed endangered or threatened species or their designated critical habitat. By this Public Notice, we are requesting that the appropriate Federal Agency concur with our determination.

The States of Connecticut, Maine, Massachusetts, New Hampshire and Rhode Island have approved **Coastal Zone Management Programs**. Where applicable the applicant states that any proposed activity will comply with and will be conducted in a manner that is consistent with the approved Coastal Zone Management Program. By this Public Notice, we are requesting the State concurrence or objection to the applicant's consistency statement.

The following authorizations have been applied for, or have been, or will be obtained:

(x) Permit, License or Assent from State.
(x) Permit from Local Wetland Agency or Conservation Commission.
( ) Water Quality Certification in accordance with Section 401 of the Clean Water Act.

In order to properly evaluate the proposal, we are seeking public comment. Anyone wishing to comment is encouraged to do so. **Comments should be submitted in writing by the above date.** If you have any questions, please contact Brian Valiton at (978) 318-8166, (800) 343-4789 or (800) 362-4367, if calling from within Massachusetts.

Any person may request, in writing, within the comment period specified in this notice, that a public hearing be held to consider the application. Requests for a public hearing shall specifically state the reasons for holding a public hearing. The Corps holds public hearings for the purpose of obtaining public comments when that is the best means for understanding a wide variety of concerns from a diverse segment of the public.

The initial determinations made herein will be reviewed in light of facts submitted in response to this notice. All comments will be considered a matter of public record. Copies of letters of objection will be forwarded to the applicant who will normally be requested to contact objectors directly in an effort to reach an understanding.

THIS NOTICE IS <u>NOT</u> AN AUTHORIZATION TO DO ANY WORK.

Karen K. Adams
Chief, Permits and Enforcement Branch
Regulatory Division

If you would prefer not to continue receiving Public Notices by email, please contact Ms. Tina Chaisson at (978) 318-8058 or e-mail her at bettina.m.chaisson@usace.army.mil. You may also check here ( ) and return this portion of the Public Notice to: Bettina Chaisson, Regulatory Division, U.S. Army Corps of Engineers, 696 Virginia Road, Concord, MA 01742-2751.

NAME: _____
ADDRESS: _____
PHONE: _____

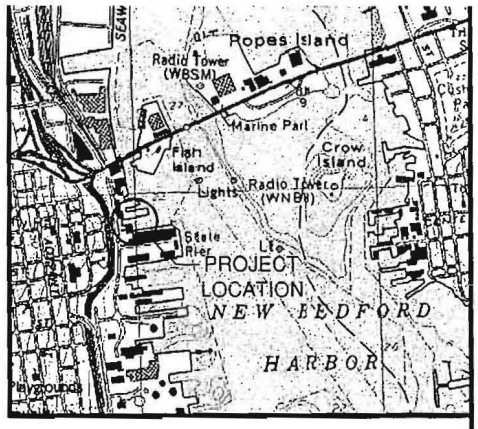

NOTES:

1. EXISTING SITE PLAN BASED UPON BASE PLAN TITLED "EXISTING CONDITIONS PLAN" BY VINE ASSOCIATES-GZA DATED JULY 8, 2010. EXISTING CONDITIONS SHOULD BE FIELD VERIFIED BY THE CONTRACTOR.

2. EXISTING BATHYMETRY BASED UPON PLAN CREATED BY APEX COMPANIES TITLED "TONNESSON PARK DREDGE AREAS POST-DREDGE" DATED SEPTEMBER 9, 2008.

3. BATHYMETRIC ELEVATIONS REFERENCE THE MEAN LOWER LOW WATER DATUM (MLLW).

NEW BEDFORD HARBOR VESSEL STAGING CENTER
NEW BEDFORD, MASSACHUSETTS

PLANS ACCOMPANYING PETITION OF THE
NEW BEDFORD HARBOR DEVELOPMENT COMMISSION
NEW BEDFORD, MASSACHUSETTS

SHEET 1 – COVER

SHEET 2 – SITE PLAN

SHEET 3 – FLOAT SECTIONS & DETAILS

SHEET 4 – FLOAT DETAILS

SHEET 5 – GANGWAY PLANS & DETAILS

SHEET 6 – GANGWAY DETAILS

JULY, 2012
SHEET 1 OF 6

ISSUED FOR PERMITS
NOT FOR CONSTRUCTION

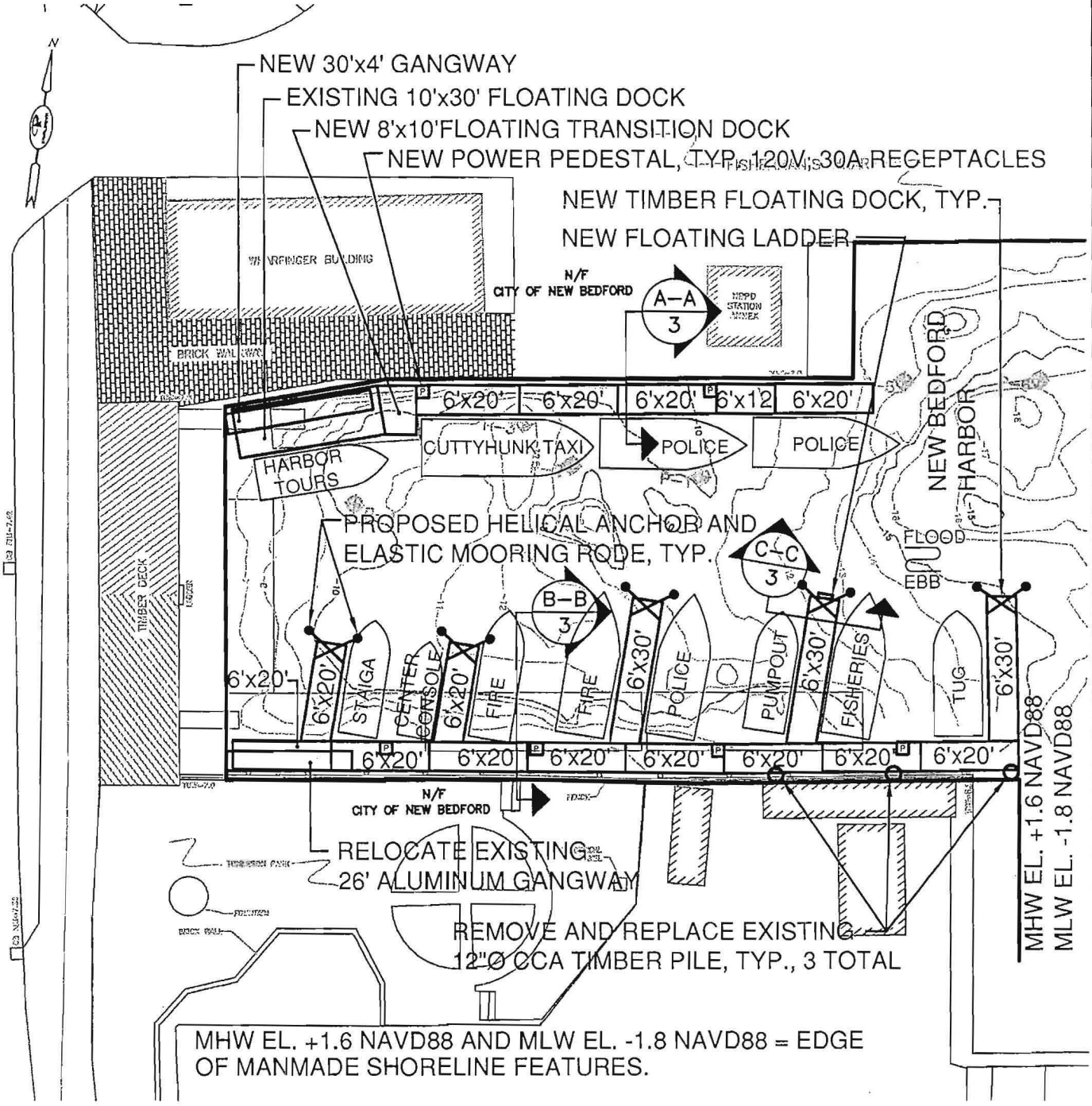

SITE PLAN
SCALE: 1"=30'

IMPACT AREA = 10 S.F.
FILL VOLUME = 0 CU. YDS.

GRAPHIC DEPICTION OF DATUM SEPARATIONS FOR NEW BEDFORD HARBOR

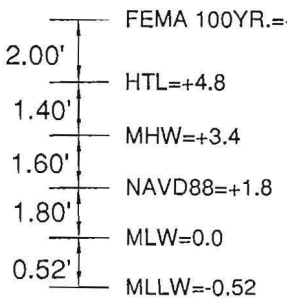

JULY, 2012
SHEET 2 OF 6

ISSUED FOR PERMITS
NOT FOR CONSTRUCTION

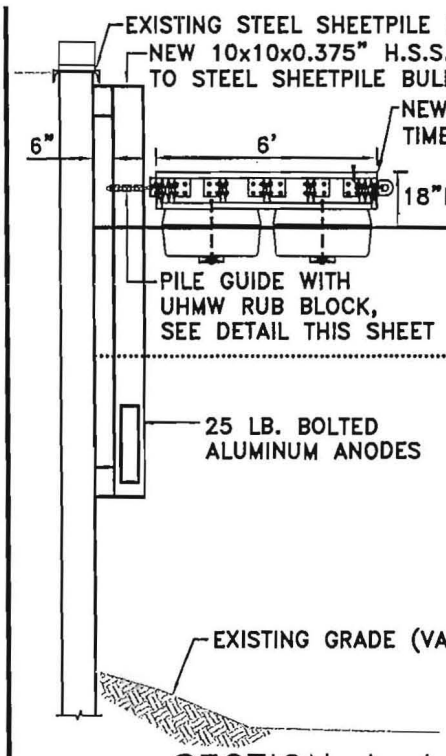

SECTION A-A
SCALE: 1"=5'

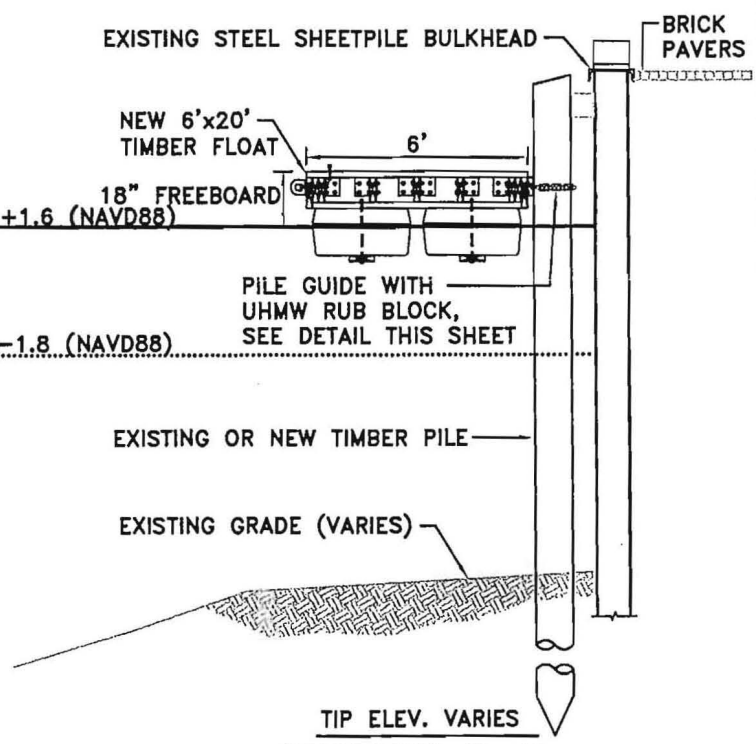

SECTION B-B
SCALE: 1"=5'

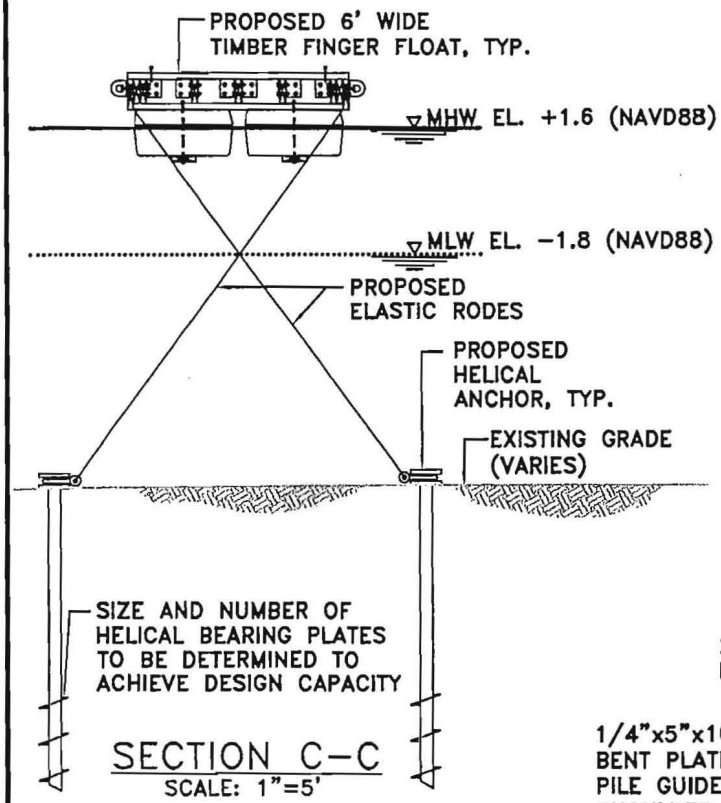

SECTION C-C
SCALE: 1"=5'

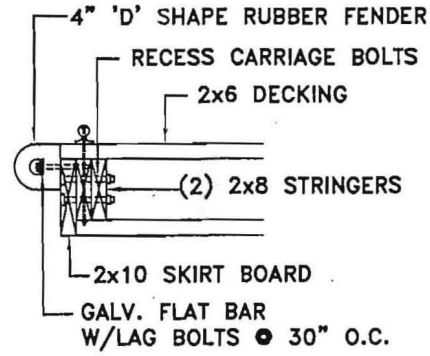

NOTE:
PROVIDE RUBBER FENDERS ALONG ALL DOCKING SIDES OF THE FLOATS.

RUBBER FENDER DETAIL
SCALE: 1"=2'

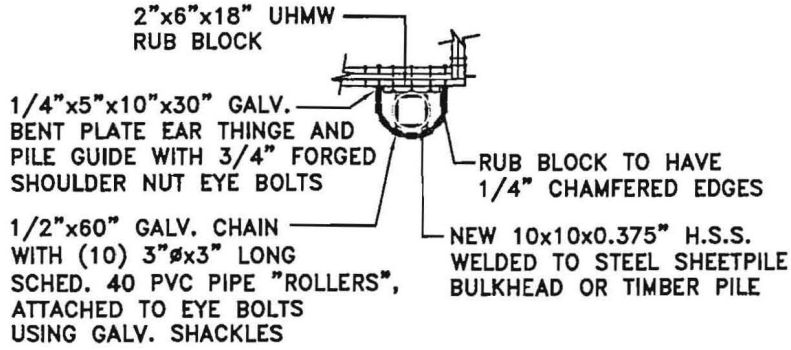

PILE GUIDE DETAILS
SCALE: 1"=5'

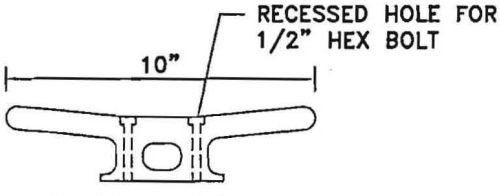

CLEAT DETAIL
SCALE: N.T.S.

5 2.5 0 5

2 1 0 2

FLOAT SECTIONS & DETAILS

ISSUED FOR PERMITS
NOT FOR CONSTRUCTION

JULY, 2012
SHEET 3 OF 6

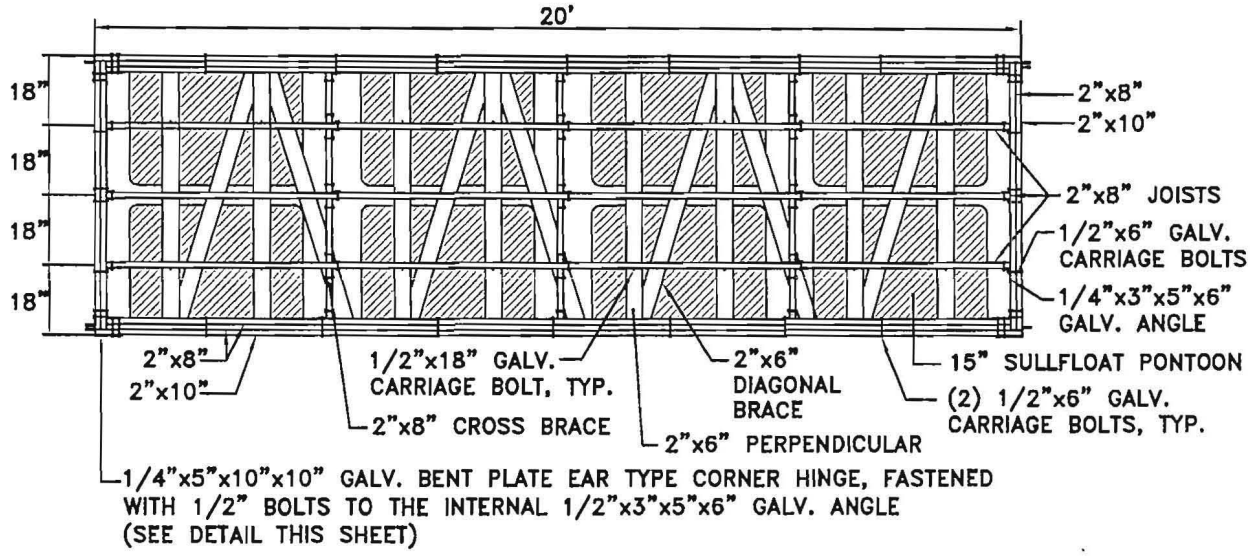

PROPOSED TIMBER FLOAT PLAN

SCALE: 1"=4'

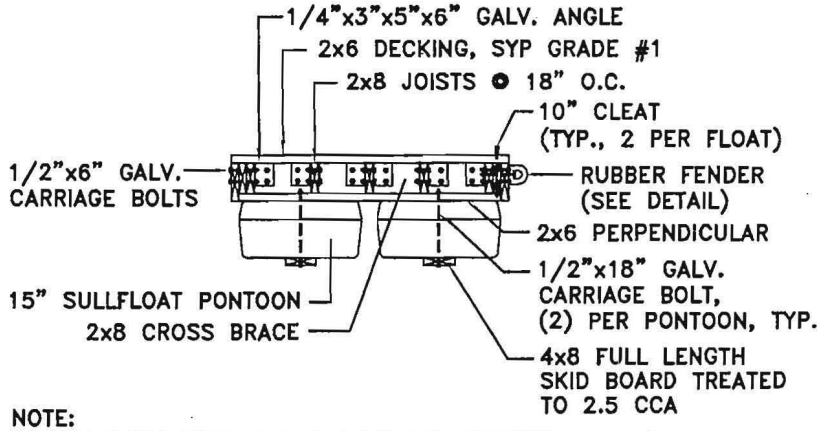

NOTE:
FASTEN DECK WITH #12x3-1/2" S.S. SCREWS

PROPOSED TIMBER FLOAT SECTION

SCALE: 1"=4'

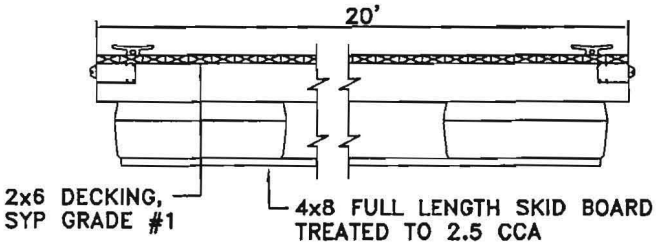

PROPOSED TIMBER FLOAT ELEVATION

SCALE: 1"=4'

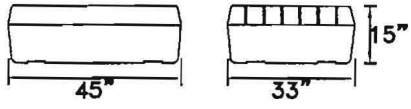

MATERIAL: MARLEX HXM 50100 OR EQUIVALENT
COLOR: BLACK
GAUGE: 0.100 TOP
0.220 BOTTOM
FOAM CORE: PRE FORMED EXPANDED POLYSTYRENE (EPS)
MINIMUM 1.0# PER CUBIC FOOT DENSITY

PONTOON SECTION

SCALE: 1"=4'

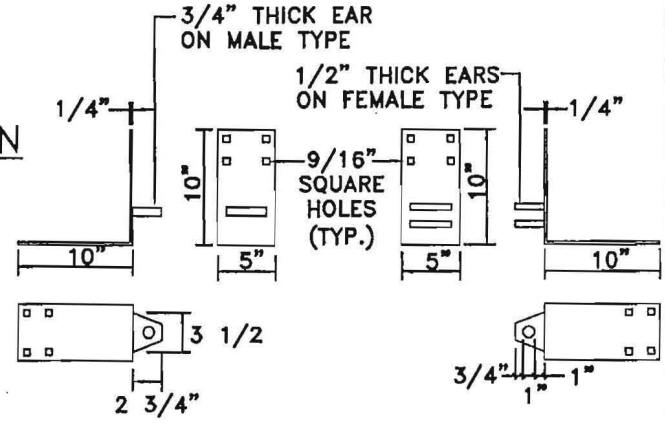

NOTE: CORNER ANGLES TO BE FABRICATED TO SUIT FLOAT LAYOUT.

FLOAT HINGE DETAILS

SCALE: 1"=2'

4 2 0 4

2 1 0 2

FLOAT DETAILS

ISSUED FOR PERMITS
NOT FOR CONSTRUCTION

JULY, 2012
SHEET 4 OF 6

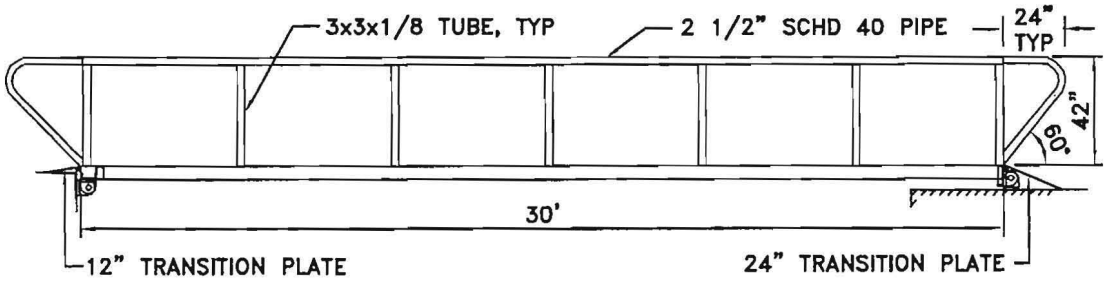

PROPOSED GANGWAY ELEVATION

SCALE: 1"=6'

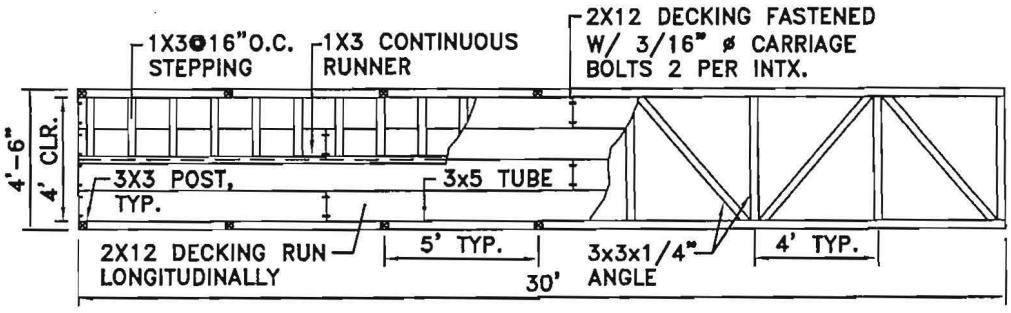

PROPOSED GANGWAY PLAN

SCALE: 1"=6'

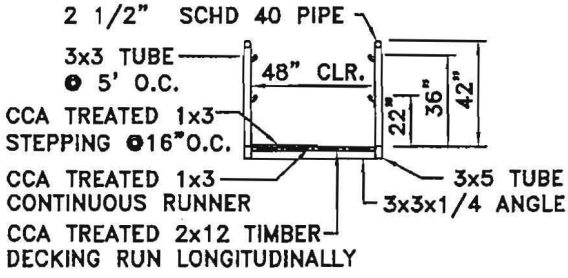

PROPOSED GANGWAY SECTION

SCALE: 1"=6'

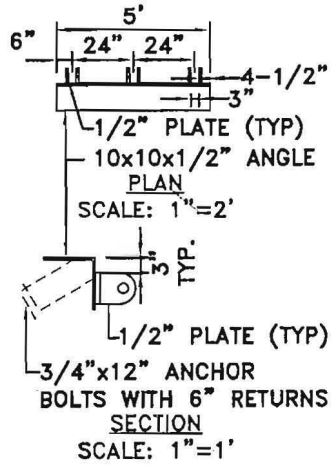

GANGWAY TO LANDING HINGE PLATE DETAILS

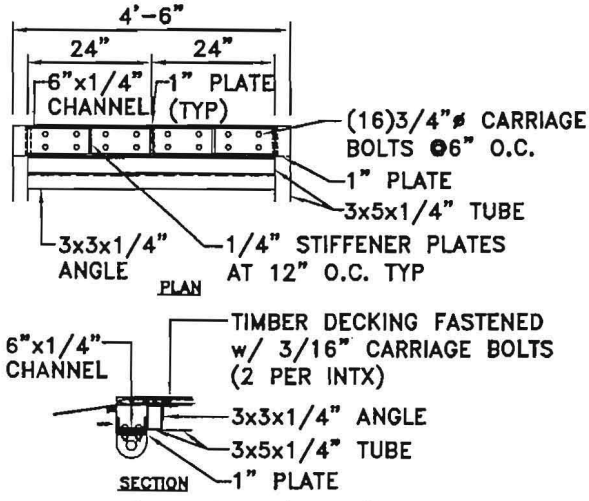

TOP OF GANGWAY END DETAILS

SCALE: 1"=3'

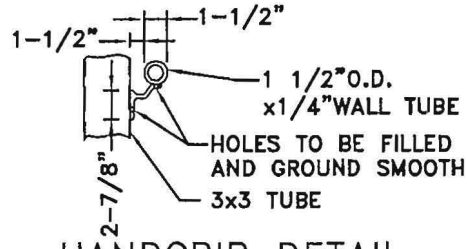

HANDGRIP DETAIL

SCALE: 1"=1'

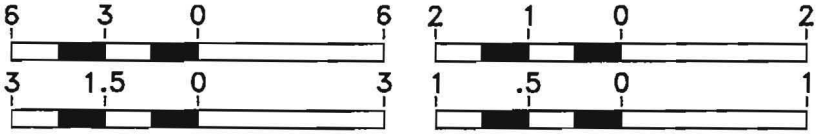

GANGWAY PLANS & DETAILS

ISSUED FOR PERMITS
NOT FOR CONSTRUCTION

JULY, 2012
SHEET 5 OF 6

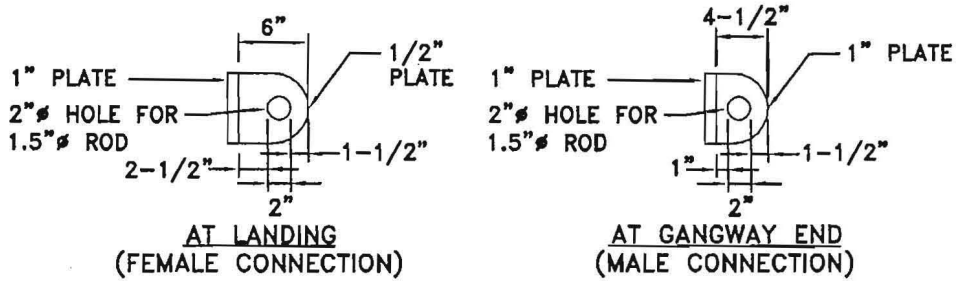

TYPICAL HINGE "EARS"

SCALE: N.T.S.

NOTES:

1. ALL HINGES, PLATES, BOLTS, AND RODS TO BE GALVANIZED A36 STEEL.
2. ALL GANGWAY FRAMING AND ALUMINUM TO BE 6016-T6 ALUMINUM.
3. ALUMINUM/STEEL CONNECTIONS PROVIDED WITH NYLON WASHERS.
4. ALL WELDS TO BE FULL PENETRATION WELDS.
5. ALUMINUM MEMBER SIZES SHOWN ARE MINIMUM TYPICAL SECTIONS. ACTUAL SECTIONS SHOULD BE BASED ON ACTUAL DESIGN. SEE SPECIFICATIONS.
6. ALL WELDED CONSTRUCTION UNLESS NOTED OTHERWISE. ALL ALUMINUM IN CONTACT WITH ALUMINUM STRUCTURAL SHAPES WILL BE TOTALLY WELDED.
7. GANGWAYS DESIGNED FOR 60 PSF VERTICAL LIVE LOAD AND DEFLECTION = L/180. GANGWAYS DESIGNED FOR 5000 LB LATERAL LOAD. GANGWAY DECK CHORDS TO BE CAPABLE OF 40 KIPS TENSION AND COMPRESSION MINIMUM.
8. THE SHAPES SHOWN ON PLANS ARE FOR INFORMATION ONLY. ACTUAL SHAPE USED SHALL BE DETERMINED BY DESIGN.
9. DISSIMILAR METALS AT BASE PLATES AND OTHER LOCATIONS TO BE SEPARATED BY NYLON PADS AND WASHERS.
10. TOTAL IMPACT IS 10 S.F. FOR INSTALLATION OF HELICAL ANCHORS. FILL VOUME = 0 CU. YDS.

GANGWAY DETAILS

ISSUED FOR PERMITS
NOT FOR CONSTRUCTION