PUBLIC NOTICE

US Army Corps of Engineers®
New England District
696 Virginia Road
Concord, MA 01742-2751

Comment Period Begins: March 1, 2011
Comment Period Ends: April 1, 2011
File Number: NAE-2010-2256
In Reply Refer To: Cori M. Rose
Phone: (978) 318-8306
E-mail:corirose@usace.army.mil

The District Engineer has received a permit application from the applicant below **to conduct work in waters of the United States** as described below.

APPLICANT Connecticut Fund for the Environment/Save the Sound, 142 Temple Street, New Haven, Connecticut 06510

ACTIVITY The discharge of fill and associated excavation below ordinary high water and within or adjacent to the floodway of the Quinnipiac River for the construction of a formed-in place concrete fish ladder at the existing Wallace Dam. All discharge of fill and excavation of sediment within the waterway will be conducted under a low-flow dewatered condition and contained with a cofferdam. A detailed description and plans of the activity are attached.

WATERWAY AND LOCATION OF THE PROPOSED WORK
This work is proposed in the Quinnipiac River at 1 River Road, Wallingford, Connecticut. The location is on the USGS Wallingford quadrangle sheet at geographic coordinates 41.45813 N Latitude and -72.83661 E Longitude.

AUTHORITY
Permits are required pursuant to:
_____Section 10 of the Rivers and Harbors Act of 1899
X___Section 404 of the Clean Water Act
_____Section 103 of the Marine Protection, Research and Sanctuaries Act).

The decision whether to issue a permit will be based on an evaluation of the probable impact of the proposed activity on the public interest. That decision will reflect the national concern for both protection and utilization of important resources. The benefit which may reasonably accrue from the proposal must be balanced against its reasonably foreseeable detriments. All factors which may be relevant to the proposal will be considered, including the cumulative effects thereof; among those are: conservation, economics, aesthetics, general environmental concerns, wetlands, cultural value, fish and wildlife values, flood hazards, flood plain value, land use, navigation, shoreline erosion and accretion, recreation, water supply and conservation, water quality, energy needs, safety, food production and, in general, the needs and welfare of the people.

The Corps of Engineers is soliciting comments from the public; Federal, state, and local agencies and officials; Indian Tribes; and other interested parties in order to consider and evaluate the impacts of this proposed activity. Any comments received will be considered by the Corps of Engineers to determine whether to issue, modify, condition or deny a permit for this proposal. To make this decision, comments are used to assess impacts on endangered species, historic properties, water quality, general environmental effects, and the other public interest factors listed above. Comments are used in the preparation of an Environmental Assessment and/or an Environmental Impact Statement pursuant to the National Environmental Policy Act. Comments are also used to determine the need for a public hearing and to determine the overall public interest of the proposed activity.

SECTION 106 COORDINATION
Based on his initial review, the District Engineer has determined that the proposed work may impact properties listed in, or eligible for listing in, the National Register of Historic Places. Additional review and consultation to fulfil requirements under Section 106 of the National Historic Preservation Act of 1966, as amended, will be ongoing as part of the permit review process.

ENDANGERED SPECIES CONSULTATION
The New England District, Army Corps of Engineers has reviewed the list of species protected under the Endangered Species Act of 1973, as amended, which might occur at the project site. It is our preliminary determination that the proposed activity for which authorization is being sought is designed, situated or will be operated/used in such a manner that it is not likely to adversely affect any federally listed endangered or threatened species or their designated critical habitat. By this Public Notice, we are requesting that the appropriate Federal Agency concur with our determination.

The States of Connecticut, Maine, Massachusetts, New Hampshire and Rhode Island have approved **Coastal Zone Management Programs**. Where applicable the applicant states that any proposed activity will comply with and will be conducted in a manner that is consistent with the approved Coastal Zone Management Program. By this Public Notice, we are requesting the State concurrence or objection to the applicant's consistency statement.

The following authorizations have been applied for, or have been, or will be obtained:
(X) Permit, License or Assent from State.
(X) Permit from Local Wetland Agency or Conservation Commission.
(X) Water Quality Certification in accordance with Section 401 of the Clean Water Act.

In order to properly evaluate the proposal, we are seeking public comment. Anyone wishing to comment is encouraged to do so. **Comments should be submitted in writing by the above date.** If you have any questions, please contact Cori M. Rose at (978) 318-8306, (800) 343-4789 or (800) 362-4367, if calling from within Massachusetts.

Any person may request, in writing, within the comment period specified in this notice, that a public hearing be held to consider the application. Requests for a public hearing shall specifically state the reasons for holding a public hearing. The Corps holds public hearings for the purpose of obtaining public comments when that is the best means for understanding a wide variety of concerns from a diverse segment of the public.

The initial determinations made herein will be reviewed in light of facts submitted in response to this notice.

All comments will be considered a matter of public record. Copies of letters of objection will be forwarded to the applicant who will normally be requested to contact objectors directly in an effort to reach an understanding.

THIS NOTICE IS NOT AN AUTHORIZATION TO DO ANY WORK.

Robert J. DeSista
Chief, Permits and Enforcement Branch
Regulatory Division

If you would prefer not to continue receiving Public Notices, please contact Ms. Tina Chaisson at (978) 318-8058 or e-mail her at bettina.m.chaisson@usace.army.mil. You may also check here ( ) and return this portion of the Public Notice to: Bettina Chaisson, Regulatory Division, U.S. Army Corps of Engineers, 696 Virginia Road, Concord, MA 01742-2751.

NAME: _____
ADDRESS: _____

PROPOSED WORK AND PURPOSE

The work includes the discharge of fill material in waters of the Quinnipiac River for the construction of a fish ladder at the existing Wallace Dam. In particular, the proposal includes the permanent discharge of fill over a 556 square foot area within the river for installation of the concrete fishway, associated backfill and installation of a concrete energy dissipation pad downstream of the dam. The fish ladder will consist of concrete retaining walls, stop log structures located within entrance and exit pools, baffles and an associated upland viewing/counting structure. There will be a net fill of 3 cubic yards within the floodway of the Quinnipiac River.

In order to make the entrance to the fishway functional there will be excavation within the river over a 678 square foot area for removal of a portion of concrete retaining wall and construction of a 6 foot wide by 1 foot deep fish access channel. Following excavation of the access channel, 482 square feet of the riverbed will be reconstructed with native rock and cobble to a finished elevation of 22.3 feet. During the project, appropriate sedimentation and erosion measures, including turbidity curtains, will be installed downstream of the work area. A coffer dam will be placed upstream and downstream around the proposed areas of the entrance and exit pools, and sand bags will be positioned along the western side of the existing spillway. In addition to containing sediment within the work area, these measures will function as a water control structure. The excavation area will remain dewatered until the bed is reconstructed through the use of pumps, as necessary, but flow will be allowed to flow past the work area along the eastern bank of the river.

In addition to the fishway work, the applicant also proposes to relocate an existing stormwater discharge pipe and remove approximately 15.3 cubic yards of road sand from a 196 square foot area within the river. The total area of permanent fill below ordinary high water for installation of the fishway is approximately 2000 square feet. There will also approximately 1,097 square feet of temporary instream disturbance during the construction.

The purpose of the project is to provide migratory anadromous and catadromous fish with access to native upstream river habitat.

The work is described on the enclosed plans entitled "WALLACE DAM FISHWAY, RIVER ROAD & QUINNIPIAC STREET," on 25 sheets, and dated "November 2010."

MITIGATION

Alternatives to the installation of a fishway at the existing dam were considered and the applicant has concluded that a fish ladder is the preferred method of restoring migratory fish to the Quinnipiac River upstream of the subject site. The extent of fill and permanent work within the river has been avoided and minimized to the maximum extent feasible to allow instream upstream movement of fish. Such avoidance measures included removal of the existing retaining wall and historic fill to insert the walls and counting structure "into" the bank. Best management practices including work "in the dry" is proposed to minimize impact to the stream from suspended sediment. Only native materials will be used to finish the instream backfill areas. No additional compensatory mitigation is proposed as the work will result in the opening up of 8 miles of Quinnipiac Riverine habitat for diadromous fish which has been blocked for over 70 years as a result of the dam installation.

WALLACE DAM
FISHWAY

RIVER ROAD & QUINNIPIAC STREET
WALLINGFORD, CONNECTICUT

DESIGNED FOR QRWA
MERIDEN, CT

REGULATORY SUBMISSION

NOVEMBER 2010
REV: DECEMBER 2010

LIST OF DRAWINGS:

	TITLE SHEET
01	NOTES & LEGEND
02	SITE PLAN - EXISTING CONDITIONS - 40 SCALE
03	SITE PLAN - EXISTING CONDTIONS - 20 SCALE
04	BASE BID - SITE PLAN - LAYOUT AND LANDSCAPING
05	BASE BID - SITE PLAN - GRADING & UTILITIES
06	BASE BID - WATER CONTROL AND S&E CONTROL
07-08	BASE BID - PROPOSED CROSS SECTIONS
09-10	BASE BID - SITE DETAILS
11	BASE BID - SEDIMENT AND EROSION CONTROL NOTES
12	BASE BID - SEDIMENT AND EROSION CONTROL DETAILS
13-14	BASE BID - STRUCTURAL FISH LADDER DETAILS
15-16	BASE BID - FISH LADDER DETAILS
17	BASE BID - RETAINING WALL & WINGWALL DETAILS
18	ADD ALTERNATES - SITE PLAN - LAYOUT & LANDSCAPING
19	ADD ALTERNATES - SITE PLAN - GRADING & UTILITIES & S&E CONTROL
20	ADD ALTERNATE - SITE DETAILS
21-22	ADD ALTERNATE - STRUCTURAL FISH LADDER DETAILS
23-25	ADD ALTERNATE - VIEWING ROOM DETAILS

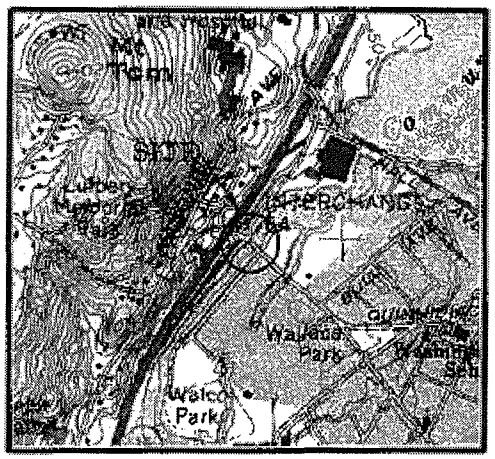

LOCATION MAP
SCALE: 1"=200'

MMI# 3019-01 & 2853-04

MILONE & MACBROOM®
Engineering,
Landscape Architecture
and Environmental Science

99 Realty Drive
Cheshire, Connecticut 06410
(203) 271-1773 Fax (203) 272-9733
www.miloneandmacbroom.com

Connecticut Fund for the Environment

QUINNIPIAC RIVER WATERSHED ASSOCIATION

Funded in part by the CT DEP through a US EPA nonpoint source grant under §319 Clean Water Act

SEAL AND SIGNATURE

STATE OF CONNECTICUT
JEFFREY S. BOUNN
No. 17400
LICENSED
PROFESSIONAL ENGINEER

P.E. CT# 17400

MILONE & MACBROOM, INC.
Civil, Water Resources and Transportation Engineering - Landscape Architecture Surveying - Planning
99 Realty Drive, Cheshire, Connecticut 06410
(203) 271-1773 - FAX (203) 272-9733

Drawing: M:\3019-01 DMS\CURRENT\WB-FISHWAY\WB-FISHWAY DWG Layout: Title
Plotted by: BECKM On this date Tue, 2010 December 21 - 9:39am

GENERAL NOTES

1. INFORMATION REGARDING THE LOCATION OF EXISTING UTILITIES IS BASED UPON AVAILABLE INFORMATION AND MAY BE INCOMPLETE, AND WHERE SHOWN SHOULD BE CONSIDERED APPROXIMATE. THE LOCATION OF ALL EXISTING UTILITIES SHOULD BE CONFIRMED PRIOR TO BEGINNING CONSTRUCTION. CALL "CALL BEFORE YOU DIG", 1-800-922-4455. ALL UTILITY LOCATIONS THAT DO NOT MATCH THE VERTICAL OR HORIZONTAL CONTROL SHOWN ON THE PLANS SHALL IMMEDIATELY BE BROUGHT TO THE ATTENTION OF THE ENGINEER FOR RESOLUTION.

2. ALL CONTOURS AND ELEVATIONS ARE BASED UPON THE NATIONAL GEODETIC VERTICAL DATUM (NAVD 88). THE NORTH ARROW AND BEARINGS ARE BASED UPON THE CONNECTICUT STATE PLANE COORDINATE SYSTEM (NAD 1983).

3. ALL DIMENSIONS AND ELEVATIONS SHALL BE VERIFIED IN THE FIELD PRIOR TO CONSTRUCTION. ANY DISCREPANCIES SHALL BE BROUGHT TO THE ATTENTION OF THE ENGINEER FOR DETERMINATION.

4. THE CONTRACTOR IS RESPONSIBLE FOR WATER HANDLING DURING CONSTRUCTION. THE CONTRACTOR SHALL COORDINATE THE WATER HANDLING WITH THE OWNER REPRESENTATIVE AND THE ENGINEER. THERE SHALL BE NO CLAIMS FOR EXTRA COMPENSATION DUE TO WATER LEVELS RISING FROM NATURAL EVENTS, SUCH AS STORMS, ETC.

5. THE CONTRACTOR SHALL PROVIDE FIELD ENGINEERING AND SURVEYING SERVICES TO ESTABLISH AND RECORD GRADES, LINES AND ELEVATIONS.

6. NO CONSRUCTION VEHICLES SHALL BE STORED, SERVICED, WASHED OR FLUSHED IN A LOCATION WHERE LEAKS, SPILLAGE, WASTE MATERIALS, CLEANERS OR WATERS WILL BE INTRODUCED OR FLOW INTO WETLANDS OR WATERCOURSES.

7. CARE SHOULD BE TAKEN THROUGHOUT CONSTRUCTION NOT TO DAMAGE THE EXISTING UTILITIES AND STRUCTURES ON THE SITE.

8. CARE SHOULD BE TAKEN THROUGHOUT CONSTRUCTION TO MINIMIZE THE IMPACT TO THE EXISTING WETLANDS AND WATERCOURSES.

9. ALL STOCKPILES IN STAGING AREA ARE TO BE ENCIRCLED WITH HAY BALES OR FILTER FABRIC FENCING. KEEP ALL STOCKPILES OUT OF WETLANDS.

10. THE PROJECT SITE IS SUBJECT TO FLOODING. THE CONTRACTOR SHALL MONITOR WEATHER FORECASTS AND REMOVE EQUIPMENT FROM FLOOD-PRONE AREAS IN THE EVENT OF FLOOD WARNINGS.

11. OVERBANK TOPOGRAPHY TAKEN FROM TOWN OF WALLINGFORD MAPPING DATED JANUARY 2005. BATHYMETRIC TOPOGRAPHY FROM MMI SURVEY CONDUCTED SEPTEMBER 2007. MEAN MAY WATER SURFACE ELEVATION TAKEN FROM MEAN MAY DISCHARGE AT USGS GAGE #01196500 CORRELATED TO MEASURED STAGE DOWNSTREAM OF WALLACE DAM. LIMIT OF 100 YEAR FLOOD PLAIN FROM FEMA FIRM MAP COMMUNITY-PANEL NUMBER 090090 0021C MAP REVISED: SEPTEMBER 7, 2000. 100 YEAR FLOOD ELEVATION 37' NGVD 29; ELEVATION 36' NAVD 88.

12. PARKING INFORMATION BASED ON FIELD OBSERVATION, SEPTEMBER 2007.

13. PARCEL BOUNDARIES TAKEN FROM OFFICIAL ZONING MAP, TOWN OF WALLINGFORD, PLANNING & ZONING COMMISSION, DATE: NOVEMBER 7, 1958, REVISED TO: 1/17/07.

14. ANY COFFERDAMS USED ARE TO BE CONSTRUCTED OF TEMPORARY MATERIALS THAT MUST BE REMOVED UPON COMPLETION OF THE PROJECT.

15. ALL DEWATERING PUMPS ARE TO DISCHARGE TO AN APPROVED TEMPORARY DEWATERING SEDIMENT BASIN. EXACT LOCATION TO BE SET IN THE FIELD.

16. ONLY NATIVE OR ROUNDED COBBLES SHALL BE ALLOWED FOR THE FINAL CHANNEL ARMORING.

17. MILONE & MACBROOM, INC. ACCEPTS NO RESPONSIBILITY FOR THE ACCURACY OF MAPS AND DATA WHICH HAVE BEEN SUPPLIED BY OTHERS.

18. INLAND WETLANDS AND WATERCOURSE LOCATIONS ARE SHOWN AS FLAGGED AND FIELD LOCATED BY MILONE & MACBROOM, INC.

19. SEDIMENT AND EROSION CONTROL MEASURES AS DEPICTED ON THESE PLANS AND DESCRIBED WITHIN THE SEDIMENT AND EROSION CONTROL NARRATIVE SHALL BE IMPLEMENTED AND MAINTAINED UNTIL PERMANENT COVER AND STABILIZATION IS ESTABLISHED. ALL SEDIMENT AND EROSION CONTROL MEASURES SHALL CONFORM TO THE "2002 CONNECTICUT GUIDELINES FOR SOIL EROSION AND SEDIMENT CONTROL", AND IN ALL CASES BEST MANAGEMENT PRACTICES SHALL PREVAIL.

20. ALL PROPOSED CONTOURS AND SPOT ELEVATIONS INDICATE FINISHED GRADE.

21. ALL CONSTRUCTION MATERIALS AND METHODS SHALL CONFORM TO THE TOWN'S REQUIREMENTS AND TO THE APPLICABLE SECTIONS OF THE STATE OF CONNECTICUT DEPARTMENT OF TRANSPORTATION STANDARD SPECIFICATIONS FOR ROADS, BRIDGES, AND INCIDENTAL CONSTRUCTION, FORM 816.

22. ANY MAINTENANCE OR REFUELING OF EQUIPMENT AND VEHICLES SHALL BE PERFORMED AT LEAST 50' FROM WETLANDS OR WATERCOURSES. OIL, GASOLINE, AND CHEMICALS NEEDED AT THE SITE WOULD BE STORED IN A SECONDARY CONTAINER AT LEAST 50' FROM WETLANDS OR WATERCOURSES TO PRVENET CONTAMINATION FROM POSSIBLE LEAKS.

23. THE PLANS REQUIRE A CONTRACTOR'S WORKING KNOWLEDGE OF LOCAL, MUNICIPAL, WATER COMPANY, AND STATE CODES FOR UTILITY SYSTEMS. ANY CONFLICTS BETWEEN MATERIALS AND LOCATIONS SHOWN, AND LOCAL REQUIREMENTS SHALL BE BROUGHT TO THE ATTENTION OF THE ENGINEER PRIOR TO THE EXECUTION OF WORK. THE ENGINEER WILL NOT BE HELD LIABLE FOR COSTS INCURRED TO IMPLEMENT OR CORRECT WORK WHICH DOES NOT CONFORM TO LOCAL CODES.

24. ALL FUEL, OIL, PAINT, OR OTHER HAZARDOUS MATERIALS SHOULD BE STORED IN A SECONDARY CONTAINER AND REMOVED TO A LOCKED INDOOR AREA WITH AN IMPERVIOUS FLOOR DURING NON-WORK HOURS.

CONSTRUCTION SEQUENCE

1. COORDINATE AN ON-SITE MEETING WITH THE OWNER'S REPRESENTATIVE AND THE ENGINEER TO DISCUSS PROJECT OBJECTIVES, ON-SITE CONDITIONS, ACCESS, MINIMIZING DISTURBANCE AND SITE STAKE-OUT.
2. OBTAIN ANY NECESSARY PERMITS AND SUBMIT PLANS AND PRODUCT INFORMATION, INCLUDING THE WATER CONTROL PLAN AND EMERGENCY OPERATION PLAN DURING CONSTRUCTION TO THE ENGINEER FOR REVIEW PRIOR TO INITIATION OF CONSTRUCTION.
3. INSTALL CONSTRUCTION FENCING AROUND THE PERIMETER OF THE SITE.
4. INSTALL TEMPORARY SEDIMENTATION AND EROSION CONTROLS SUCH AS FILTER FABRIC FENCING, AS SHOWN ON PLAN. MAINTAIN CONTROLS THROUGHOUT DURATION OF PROJECT.
5. CLEAR AND GRUB AREA OF PROPOSED WORK AND STAGING AREA.
6. RELOCATE EXISTING STORM WATER OUTFALL.
7. ESTABLISH HORIZONTAL AND VERTICAL SITE CONTROL AND STAKE OUT CHANNEL CONTROL POINTS, ENGINEER TO INSPECT AND APPROVE CHANNEL LAYOUT AS STAKED PRIOR TO EXCAVATION.
8. INSTALL COFFERDAMS FOR WATER CONTROL AS SHOWN ON PLANS.
9. INITIATE REMOVAL OF SOIL IN AREA OF FISHWAY.
10. REMOVE SECTION OF EXISTING RETAINING WALL AS SHOWN ON PLANS.
11. MOVE EXISTING CHANNEL ROCK AS SHOWN ON PLANS.
12. EXCAVATE SOIL OVERBURDEN DOWN TO PROPOSED GRADE ALONG FISHWAY. STABILIZE CUT SLOPES AS REQUIRED.
13. DEWATER EXCAVATION AND UTILIZE WATER CONTROLS AS NEEDED.
14. INSTALL ELECTRICAL LINES FOR VIEWING ROOM/VIDEO CLOSET AS NEEDED.
15. CONSTRUCT CONCRETE FISHWAY RETAINING WALLS, STOP LOG STRUCTURES IN ENTRANCE AND EXIT POOLS, AND VIEWING STRUCTURE.
16. FINALIZE GRADING AND PLANTINGS ALONG WESTERN SIDE OF THE FISHWAY.
17. CONSTRUCT CONCRETE RETAINING WALLS, WALKWAYS, AND STAIRS ALONG WESTERN SIDE OF FISHWAY.
18. CHANNEL WILL THEN BE FIELD-TESTED, MODIFY RIVER BED AS DIRECTED BY THE ENGINEER OR BIOLOGIST.
19. CONSTRUCT FINAL WALKWAY ALONG WESTERN SIDE OF THE FISHWAY. INSTALL PLANTINGS AS SHOWN ON THE PLANS.
20. RECONFIGURE EXISTING PARKING AREA AS SHOWN ON THE PLANS.
21. REMOVE ACCESS ROAD, CONSTRUCTION ACESS PAD AND ORANGE CONSTRUCTION FENCING. REMOVE SEDIMENT AND EROSION CONTROLS ONCE SITE HAS FULLY STABILIZED.

LEGEND:

- EDGE OF WATER
- MAJOR CONTOUR
- MINOR CONTOUR
- EXISTING GUIDERAIL
- EXISTING UTILITY POLE
- LIMIT OF STATE AND FEDERAL WETLANDS
- BORING LOCATION
- 100YRFLP — LIMIT OF 100-YEAR FLOOD ZONE
- FW — LIMIT OF FEMA FLOODWAY
- SCEL — STREAM CHANNEL ENCROACHMENT LINE
- EXISTING TREELINE
- PROPOSED TREELINE
- SILT FENCE AND HAYBALES
- CONTRACT LIMIT LINE
- PROPOSED ROUND RAIL FENCE

Engineering, Landscape Architecture and Environmental Science

MILONE & MACBROOM®

99 Realty Drive
Cheshire, Connecticut 06410
(203) 271-1773 Fax (203) 272-9733
www.miloneandmacbroom.com

NOTES & LEGEND

DESIGNED	EEL	
DRAWN	BAM	
CHECKED	JAG	

WALLACE DAM FISHWAY
QUINNIPIAC RIVER

LOCATION
RIVER ROAD & QUINNIPIAC STREET
WALLINGFORD, CONNECTICUT

DATE	NOVEMBER 2010	SHEET
SCALE	---	01 OF 25
PROJ. NO.	3019-01	

Drawing: M:\3019-01\DWG\CURRENT\VO-TITLESHEET.DWG Layout Tab:D1 NOTES & LEGEND
Plotted By: BECKYM On this date: Tue, 2010 December 21 - 9:39am

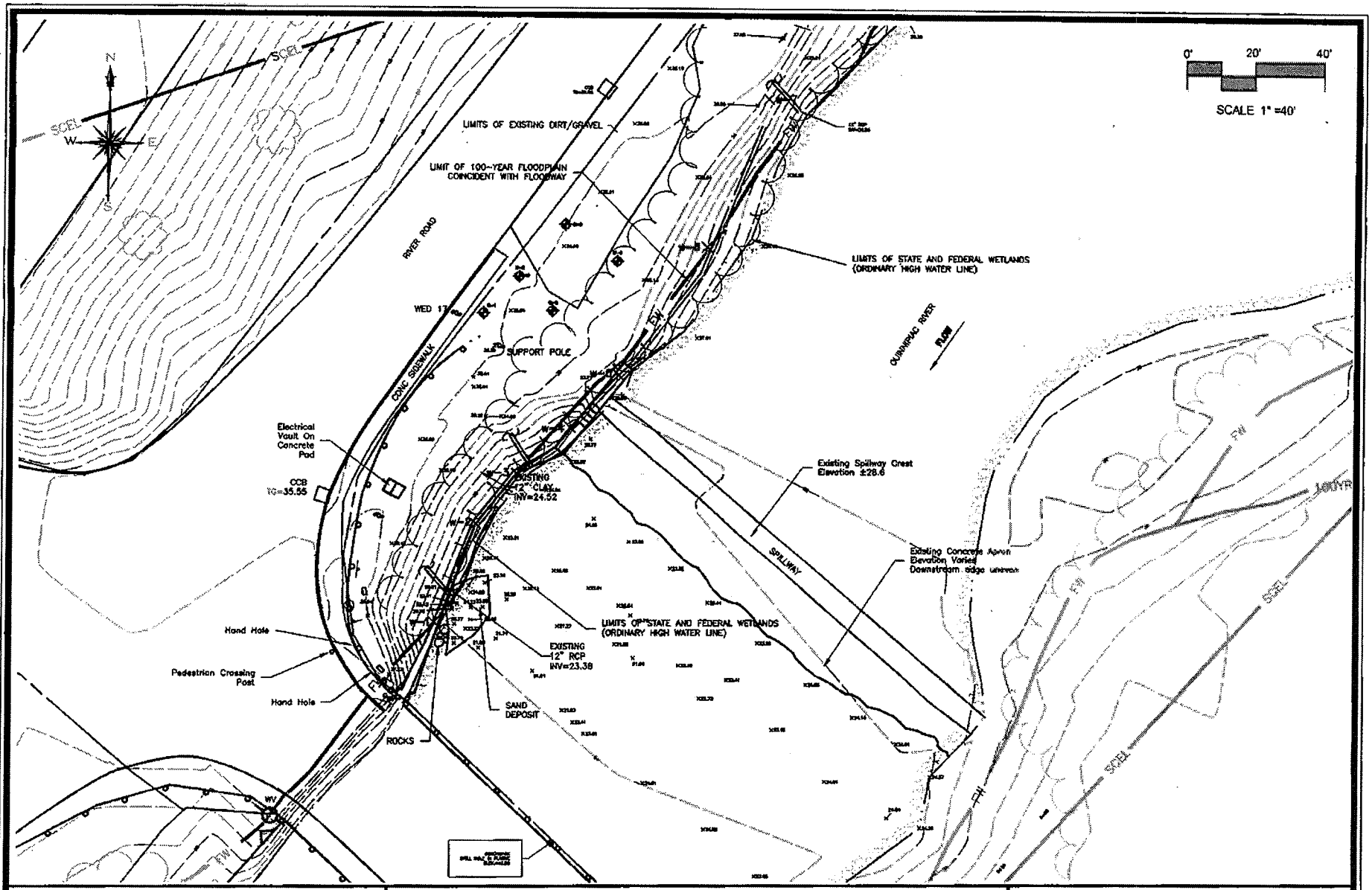

Engineering, Landscape Architecture and Environmental Science

MILONE & MACBROOM®

99 Realty Drive
Cheshire, Connecticut 06410
(203) 271-1773 Fax (203) 272-9733
www.miloneandmacbroom.com

SITE PLAN - EXISTING CONDITIONS - 40 SCALE

DESIGNED	—
DRAWN	BAM
CHECKED	JAG

WALLACE DAM FISHWAY
QUINNIPIAC RIVER

LOCATION
RIVER ROAD & QUINNIPIAC STREET
WALLINGFORD, CONNECTICUT

DATE	NOVEMBER 2010
SCALE	1"=40'
PROJ. NO.	3019-01

SHEET
02 OF 25

Drawing: R:\3019-01\DWG\CURRENT\2-BASE.DWG Layout Tab:02 SITE PLAN - EXISTING CONDITIONS (2)

Plotted by: BDUNN On this date: Mon, 2010 November 1 - 3:01pm

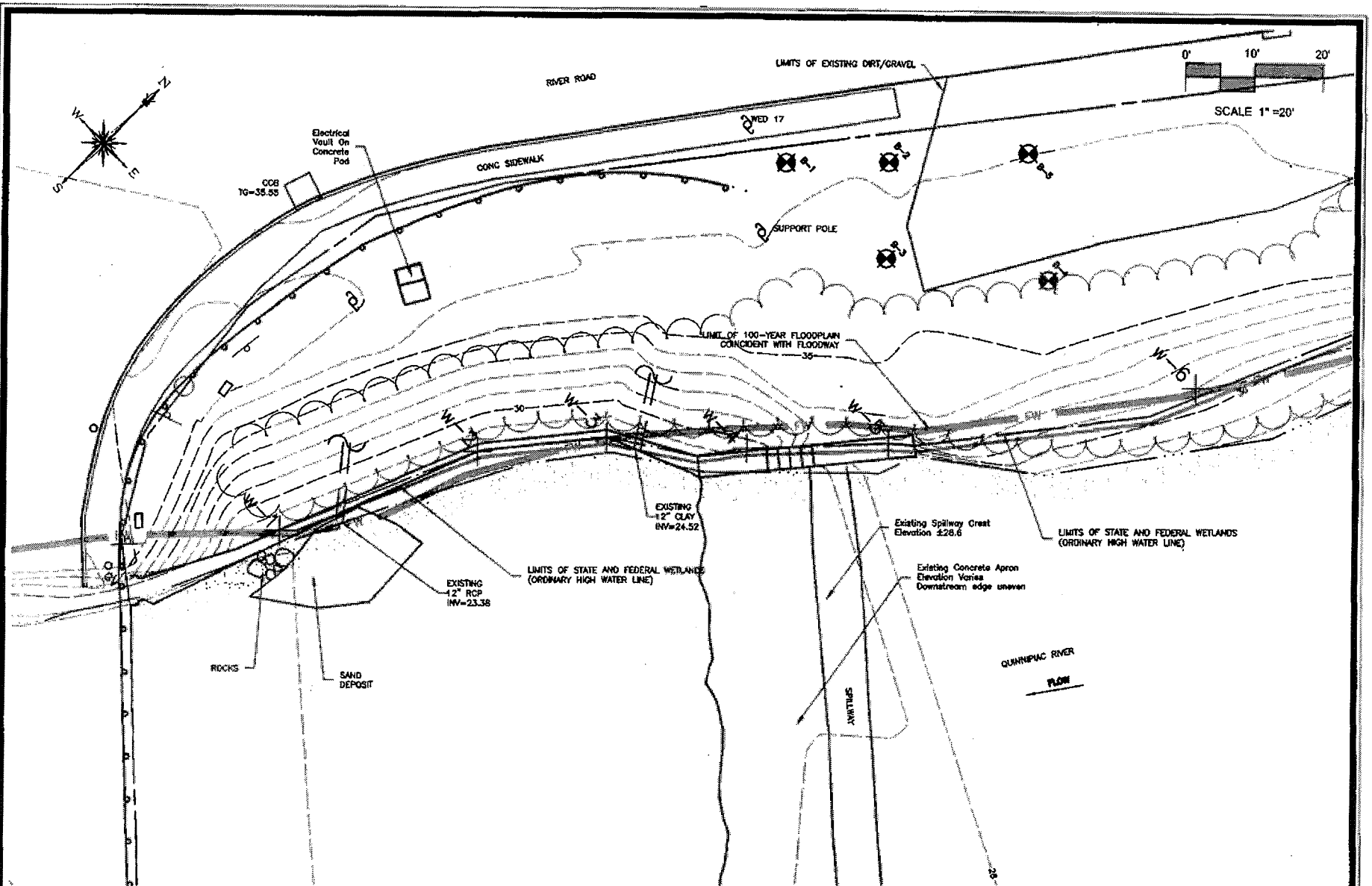

Engineering,
Landscape Architecture
and Environmental Science

MILONE & MACBROOM®

99 Realty Drive
Cheshire, Connecticut 06410
(203) 271-1773 Fax (203) 272-9733
www.miloneandmacbroom.com

SITE PLAN - EXISTING CONDITIONS - 20 SCALE

DESIGNED	---
DRAWN	BAM
CHECKED	JAG

WALLACE DAM FISHWAY
QUINNIPIAC RIVER

LOCATION
RIVER ROAD & QUINNIPIAC STREET
WALLINGFORD, CONNECTICUT

DATE	NOVEMBER 2010
SCALE	1"=20'
PROJ. NO.	3019-01

SHEET
03 OF 25

PLANT LIST

TREES	REV	QTY	KEY	BOTANICAL NAME	COMMON NAME	SIZE	COMMENTS
		3	BN	Betula nigra	River Birch	8-10' HT.	B&B
SHRUBS/PERENNIALS	**REV**	**QTY**	**KEY**	**BOTANICAL NAME**	**COMMON NAME**	**SIZE**	**COMMENTS**
		5	AC	Amelanchier canadensis	Serviceberry	24"-30" HT.	CLUMP,FULL & DENSE
		65	AU	Arctostaphylos uva-ursi	Bearberry	1 GAL.	FULL & DENSE
		23	CL	Clethra alnifolia	Summersweet	24"-30" HT.	FULL & DENSE
		9	CA	Cornus amomum	Silky Dogwood	24"-30" HT.	FULL & DENSE
		5	CS	Cornus sericea	Red Twigged Dogwood	24"-30" HT.	FULL & DENSE
		6	KL	Kalmia latifolia	Mountain Laurel	36"-42" HT.	FULL & DENSE
		10	IV	Ilex verticillata	Winterberry	24"-30" HT.	FULL & DENSE
		5	SC	Sambucus canadensis	Common Elderberry	24"-30" HT.	FULL & DENSE
		8	SL	Spiraea latifolia	Meadowsweet	18"-24" HT.	FULL & DENSE
SEED MIX	**REV**	**QTY**	**KEY**	**BOTANICAL NAME**	**COMMON NAME**	**SIZE**	**COMMENTS**
				NEW ENGLAND EROSION CONTROL/RESTORATION MIX (FOR MOIST SITES)	N/A	N/A	N/A
				NEW ENGLAND CONSERVATION/WILDLIFE MIX	N/A	N/A	N/A

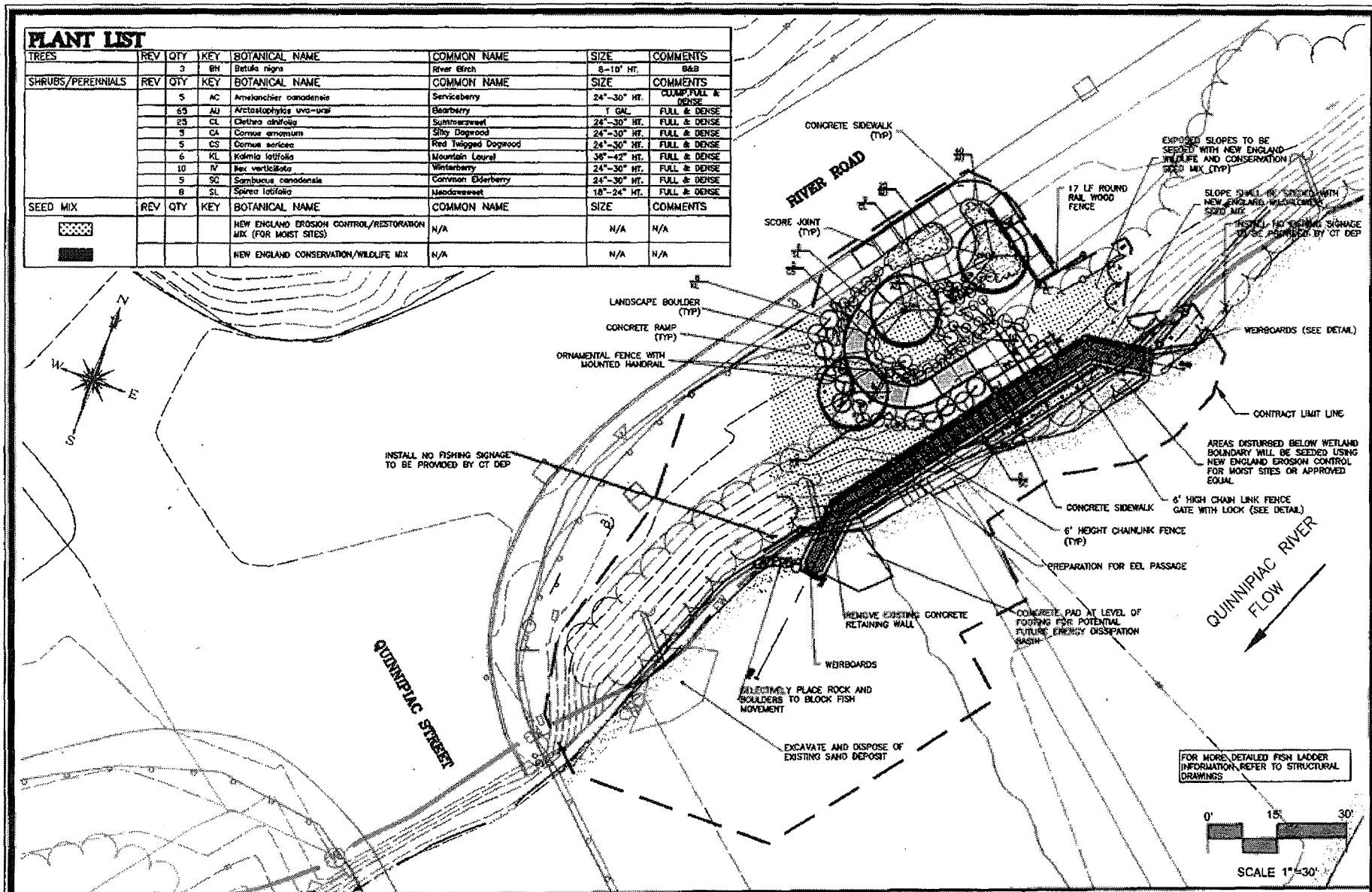

Engineering, Landscape Architecture and Environmental Science

MILONE & MACBROOM®

99 Realty Drive
Cheshire, Connecticut 06410
(203) 271-1773 Fax (203) 272-9733
www.miloneandmacbroom.com

BASE BID - SITE PLAN - LAYOUT & LANDSCAPING

DESIGNED	EEL
DRAWN	BAM
CHECKED	JAG

WALLACE DAM FISHWAY
QUINNIPIAC RIVER

LOCATION
RIVER ROAD & QUINNIPIAC STREET
WALLINGFORD, CONNECTICUT

DATE	NOVEMBER 2010
SCALE	1"=30'
PROJ. NO.	3019-01

SHEET
04 OF 25

Drawing: H:\3019-01\DWG\CURRENT\WD-LAYOUT.DWG Layout Tab:03 BASE BID - SITE PLAN - LAYOUT & LANDSCAPING
Plotted By: EEUNTM On: Dec 10, 2010 December 21 - 9:42am

REGULATORY ACTIVITIES TABLE	
PERMANENT ACTIVITY BELOW ORDINARY HIGH WATER MARK	552 S.F.
TEMPORARY ACTIVITY BELOW ORDINARY HIGH WATER MARK	478 S.F.
AREA OF DISTURBANCE IN FLOODWAY/FLOODPLAIN	882 S.F.
NET FILL IN FLOODWAY/100 YEAR FLOODPLAIN	3 C.Y.
AREA OF DISTURBANCE IN SCEL	4,839 S.F.
NET CUT IN SCEL	48 C.Y.

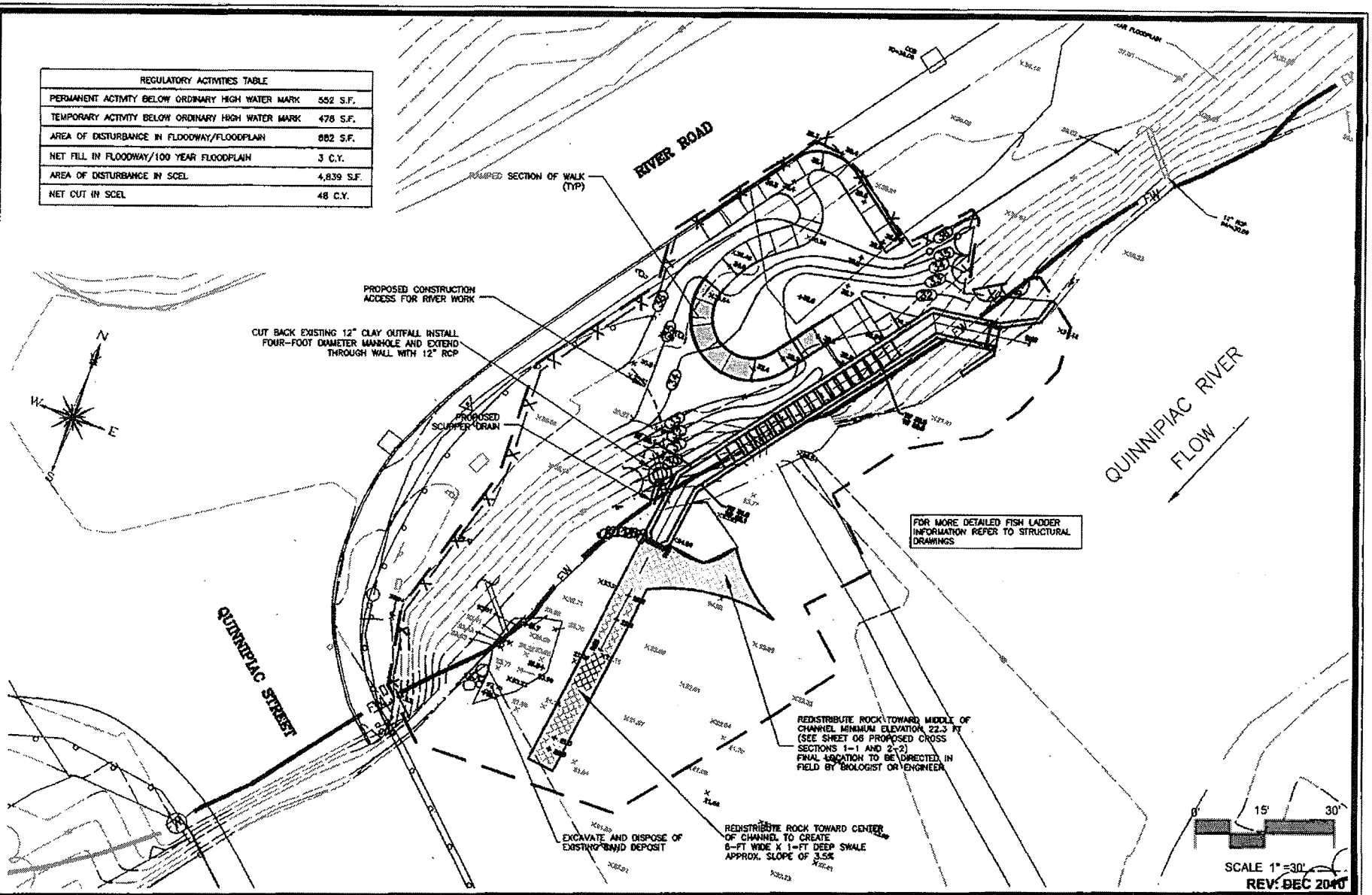

Engineering, Landscape Architecture and Environmental Science

MILONE & MACBROOM®

99 Realty Drive
Cheshire, Connecticut 06410
(203) 271-1773 Fax (203) 272-9733
www.miloneandmacbroom.com

BASE BID - SITE PLAN - GRADING & UTILITIES

DESIGNED	EEL
DRAWN	BAM
CHECKED	JAG

WALLACE DAM FISHWAY
QUINNIPIAC RIVER

LOCATION
RIVER ROAD & QUINNIPIAC STREET
WALLINGFORD, CONNECTICUT

DATE	NOVEMBER 2010
SCALE	1"=30'
PROJ. NO.	3019-01

SHEET
05 OF 25

Drawing: H:\3019-01\DWG\CURRENT\WD-GRADING.DWG Layout Tab:04 BASE BID - SITE PLAN - GRADING & UTILITIES
Plotted by: [illegible] On this date Tue, 2010 December 21 - 10:06a

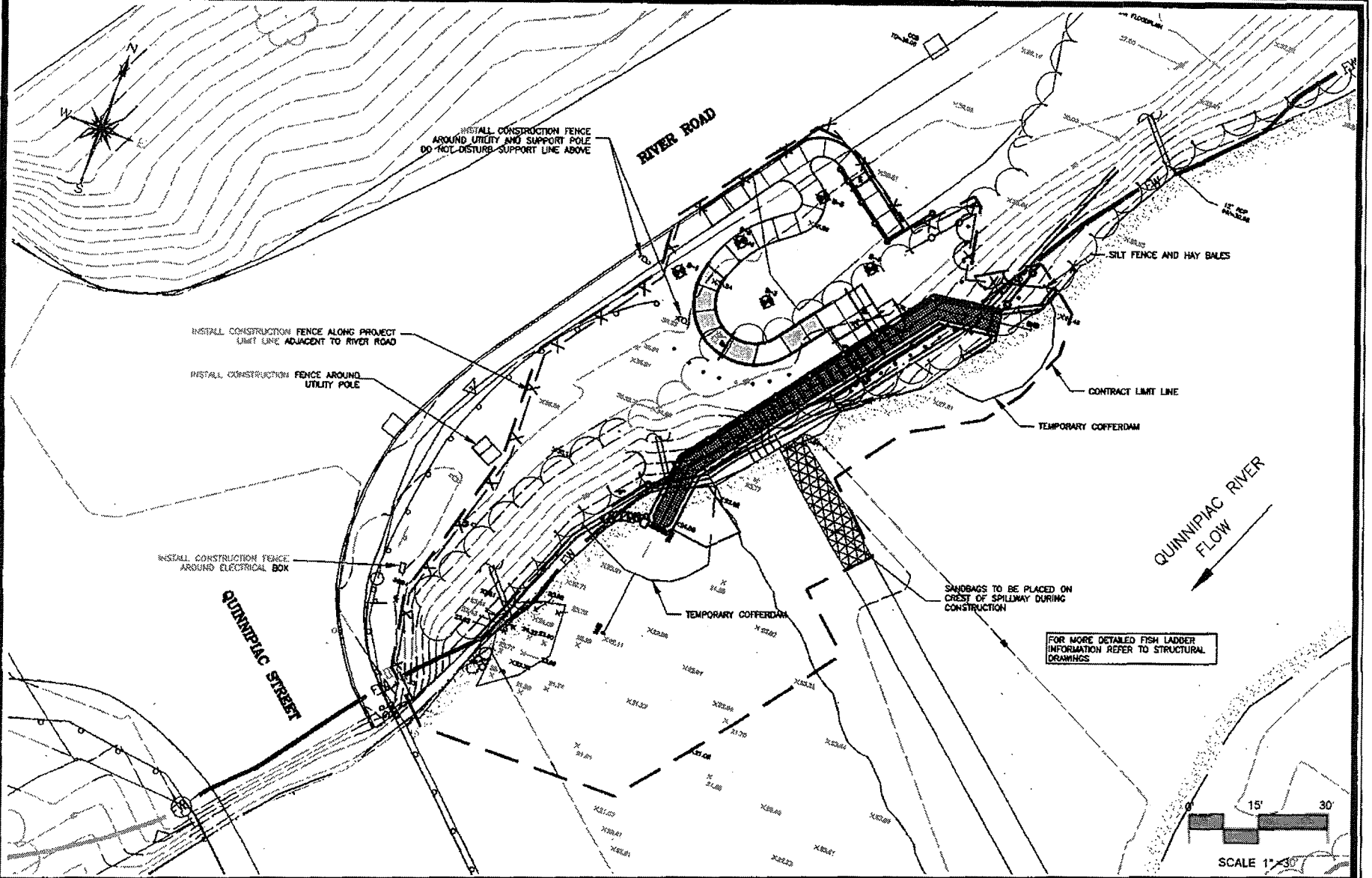

Engineering, Landscape Architecture and Environmental Science

MILONE & MACBROOM®

99 Realty Drive
Cheshire, Connecticut 06410
(203) 271-1773 Fax (203) 272-9733
www.miloneandmacbroom.com

BASE BID - WATER CONTROL AND S&E CONTROL

DESIGNED	EEL
DRAWN	BAM
CHECKED	JAG

WALLACE DAM FISHWAY
QUINNIPIAC RIVER

LOCATION
RIVER ROAD & QUINNIPIAC STREET
WALLINGFORD, CONNECTICUT

DATE	NOVEMBER 2010
SCALE	1"=30'
PROJ. NO.	3019-01

SHEET
06 OF 25

Drawing: H:\3019-01\DWG\CURRENT\WD-LAYOUT.DWG Layout Tab:06 BASE BID - WATER CONTROL AND S&E CONTROL

Plotted by: BECKMA On this date: Tue, 2010 December 21 - 9:42am

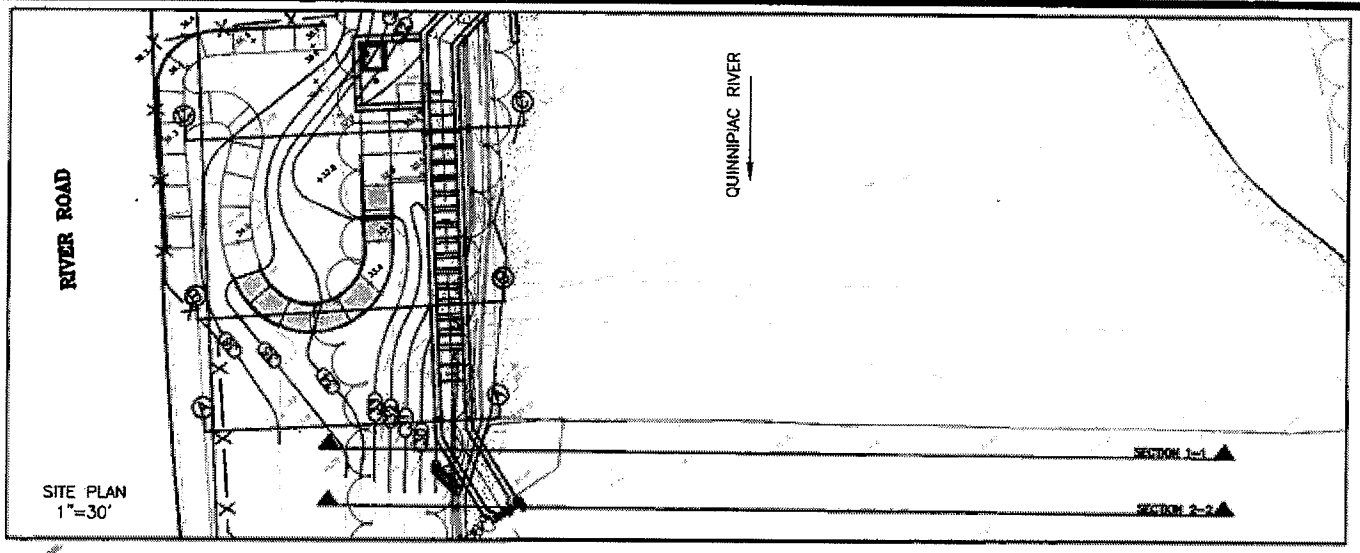

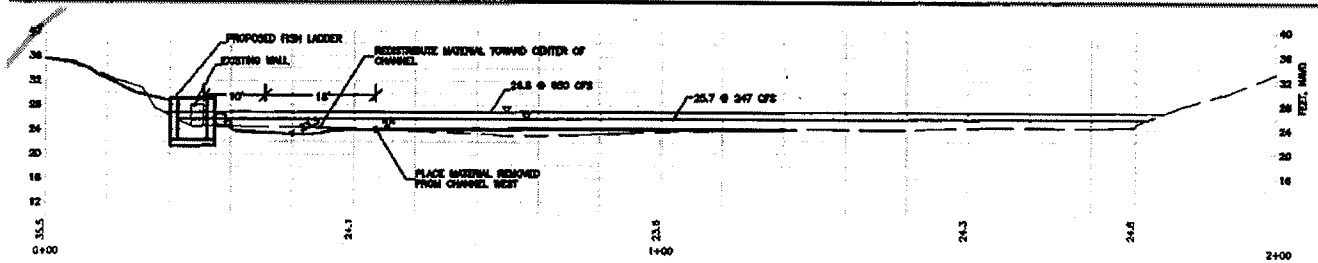

SECTION 1-1
1"=30'

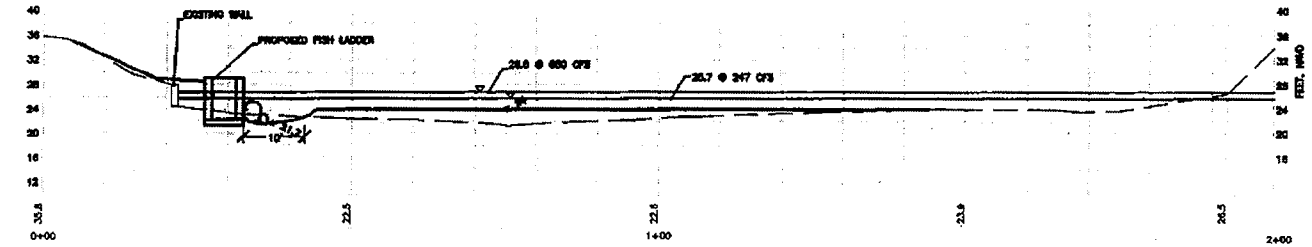

SECTION 2-2
1"=30'

Engineering,
Landscape Architecture
and Environmental Science
MILONE & MACBROOM®
99 Realty Drive
Cheshire, Connecticut 06410
(203) 271-1773 Fax (203) 272-9733
www.miloneandmacbroom.com

BASE BID - PROPOSED CROSS SECTIONS (1)

DESIGNED	EEL
DRAWN	BAM
CHECKED	JAG

WALLACE DAM FISHWAY
QUINNIPIAC RIVER

LOCATION
RIVER ROAD & QUINNIPIAC STREET
WALLINGFORD, CONNECTICUT

DATE	NOVEMBER 2010
SCALE	AS NOTED
PROJ. NO.	3019-01

SHEET
07 OF 25

Drawing: M:\3019-01\DWG\CURRENT\WD-2SECTIONS.DWG Layout Tab:06 BASE BID - PROPOSED CROSS SECTIONS (1)
Plotted by SECKYM On this date: Mon, 2010 November 1 - 2:20pm

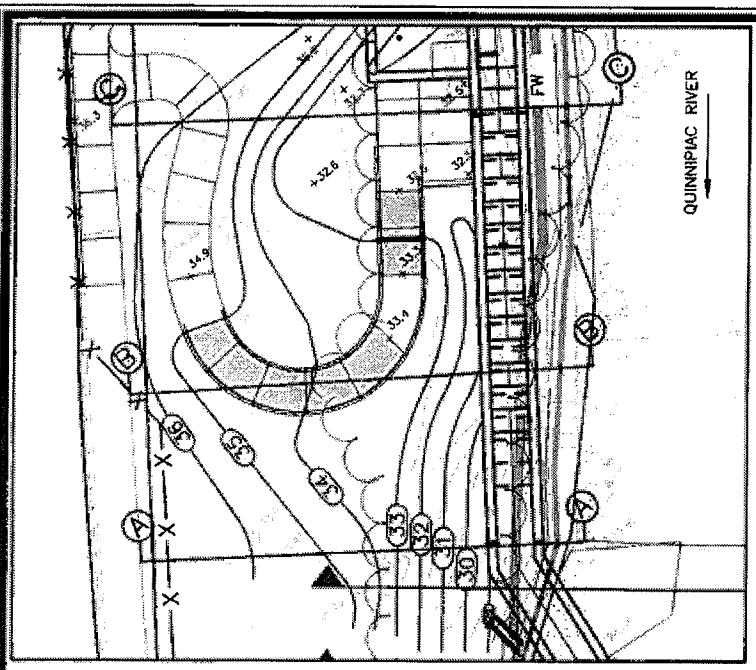

SITE PLAN
1"=20'

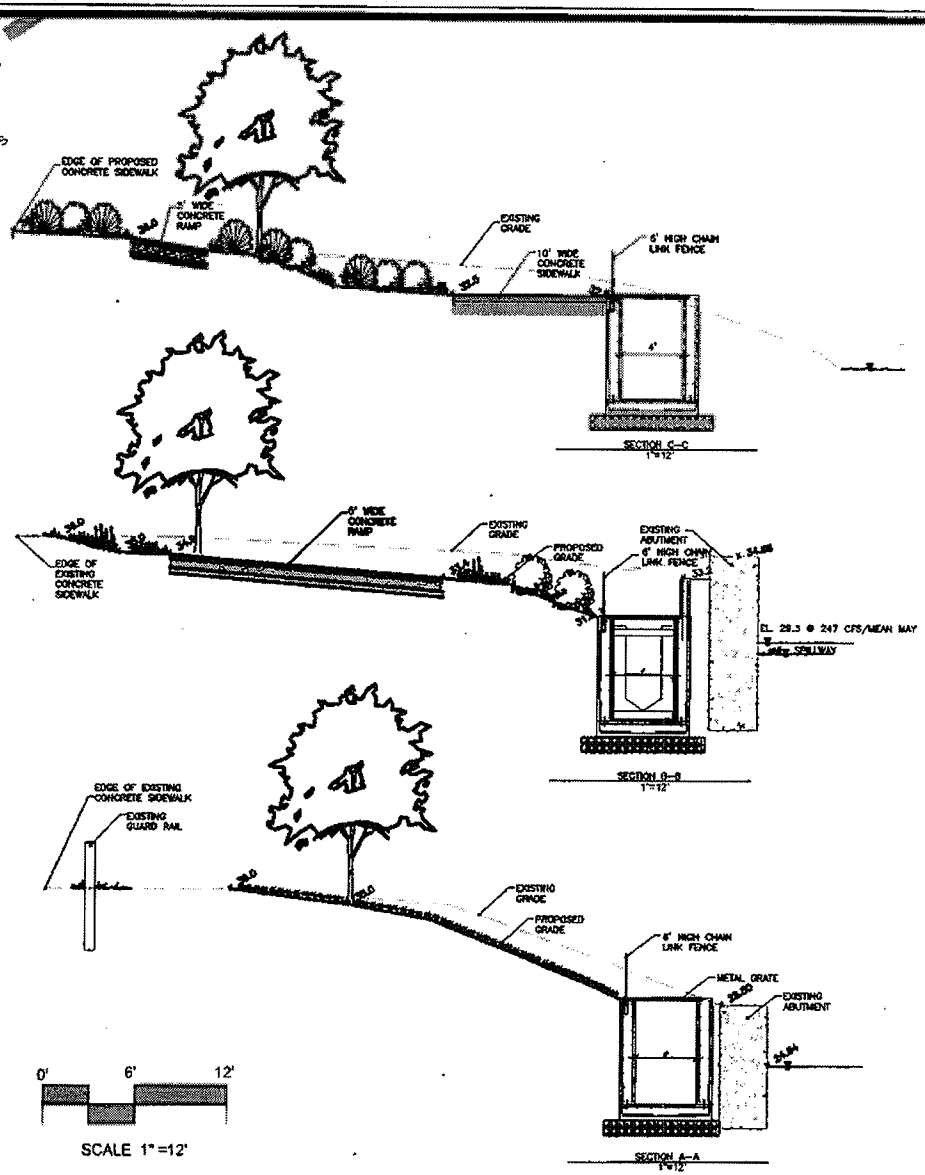

0' 6' 12'
SCALE 1"=12'

Engineering, Landscape Architecture and Environmental Science
MILONE & MACBROOM®
99 Realty Drive
Cheshire, Connecticut 06410
(203) 271-1773 Fax (203) 272-9733
www.miloneandmacbroom.com

BASE BID - PROPOSED CROSS SECTIONS (2)

DESIGNED	EEL
DRAWN	BAM
CHECKED	JAG

WALLACE DAM FISHWAY
QUINNIPIAC RIVER

LOCATION
RIVER ROAD & QUINNIPIAC STREET
WALLINGFORD, CONNECTICUT

DATE	NOVEMBER 2010
SCALE	AS NOTED
PROJ. NO.	3019-01

SHEET
08 OF 25

Drawing: H:\3019-01\DWG\CURRENT\WD-XSECTIONS.DWG Layout Tab:07 BASE BID - PROPOSED CROSS SECTIONS (2)
Plotted by: BECKYM On this date: Mon, 2010 November 1 - 2:20pm

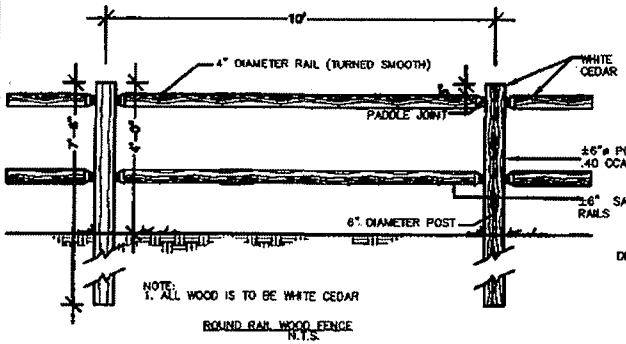

ROUND RAIL WOOD FENCE
N.T.S.

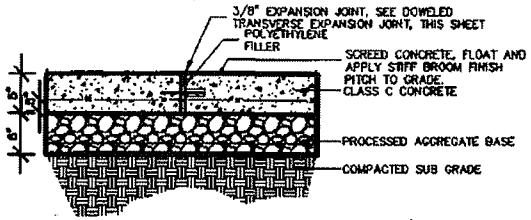

NOTES:
1. EXP. JOINTS 20' O.C. MAX.
2. CONCRETE BASE SHALL BE SCREENED, FLOATED, WITH STIFF BROOM FINISH AND PITCHED TO GRADE

CONCRETE SIDEWALK
N.T.S.

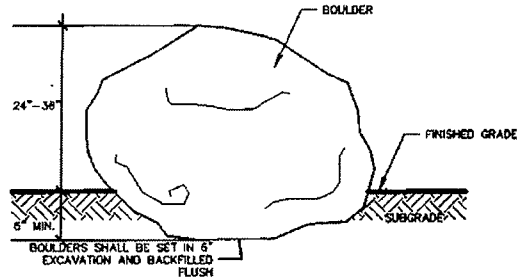

NOTES:
1. LANDSCAPE BOULDER SHALL BE 2'-4' IN SIZE WITH ROUNDED APPPEARANCE.
2. NO SHOT ROCK BOULDERS WILL BE ACCEPTED.
3. CONTRACTOR SHALL NOTIFY ENGINEER OF SOURCE OF BOULDERS AND ARRANGE FOR VISUAL APPROVAL BY ENGINEER PRIOR TO DELIVERY ON SITE.

LANDSCAPE BOULDER
N.T.S.

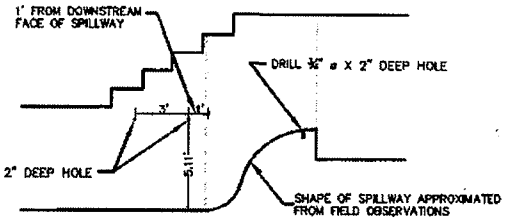

ELEVATION

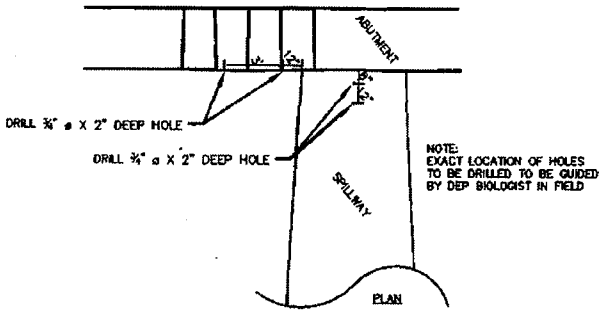

PREPARATION FOR FUTURE EEL PASSAGE
NOT TO SCALE

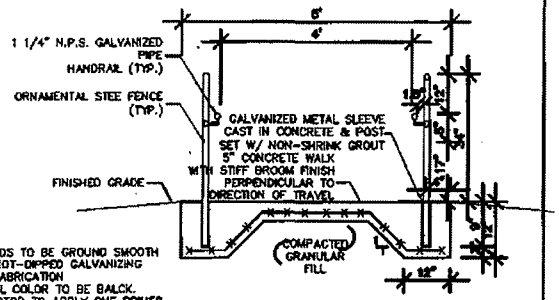

NOTES:
1. ALL WELDS TO BE GROUND SMOOTH
2. APPLY HOT-DIPPED GALVANIZING AFTER FABRICATION
3. HANDRAIL COLOR TO BE BALCK. CONTRACTOR TO APPLY ONE PRIMER COAT AND 2 FINISHED COATS OF EXTERIOR GRADE LATEX PAINT.
4. SUBMIT SHOP DRAWINGS FOR APPROVAL.

CONCRETE RAMP
N.T.S.

GENERAL NOTES

TYPICAL DETAILS AND NOTES ON THESE DRAWINGS SHALL APPLY UNLESS SPECIFICALLY SHOWN OR NOTED OTHERWISE. CONSTRUCTION DETAILS NOT FULLY SHOWN OR NOTED SHALL BE SIMILAR TO DETAILS SHOWN FOR OTHER SIMILAR CONDITIONS.

REFER TO SITE, MECHANICAL, AND ELECTRICAL DRAWINGS FOR THE SIZE AND LOCATION OF OPENINGS AND DETAILS NOT SHOWN ON THE STRUCTURAL DRAWINGS. ALL DIMENSIONS AND ELEVATIONS ARE TO BE COORDINATED WITH THE SITE DRAWINGS. NOTIFY THE ENGINEER OF ANY DISCREPANCIES.

IF ANY CONDITIONS ARISE DURING CONSTRUCTION THAT PRECLUDE COMPLIANCE WITH THE DETAILS SHOWN ON THESE DRAWINGS, THE WORK IN THE AFFECTED AREAS SHALL CEASE AND THE ENGINEER SHALL BE NOTIFIED IMMEDIATELY.

THE CONTRACTOR SHALL BE SOLELY RESPONSIBLE FOR EXCAVATION PROCEDURES, BLASTING, SHORING, AND PROTECTION. FOUNDATION EXCAVATIONS SHALL BE REVIEWED AND ACCEPTED BY THE ENGINEER OR HIS REPRESENTATIVE PRIOR TO THE PLACEMENT OF ANY REINFORCING STEEL OR CONCRETE.

PROPOSED BOTTOM OF FOOTING ELEVATIONS ARE SHOWN IN ROCK AREAS. FINAL FOOTING ELEVATIONS WILL BE DETERMINED AFTER BLASTING AND A SITE SURVEY IS PERFORMED TO DETERMINE ELEVATIONS. MODIFICATIONS TO RETAINING WALLS, SUCH AS FOOTING SIZE AND REINFORCING, SHALL BE MADE BY THE ENGINEER IF OVERBLASTING OCCURS. REINFORCING SHOP DRAWINGS SHALL NOT BE SUBMITTED UNTIL THE FINAL FOOTING ELEVATIONS HAVE BEEN DETERMINED.

CONCRETE NOTES

ALL CONCRETE, EXCLUDING SIDEWALKS AND SLABS ON GRADE, SHALL BE NORMAL WEIGHT, WITH A MINIMUM 28 DAY COMPRESSIVE STRENGTH OF 4,000 PSI. CONCRETE SHALL BE CLASS "C" EXCEPT FOOTINGS WHICH IS CLASS "A". THIS INCLUDES RETAINING WALLS, FOOTINGS, MAT SLAB, AND INTAKE STRUCTURE. SIDEWALKS AND SLABS ON GRADE SHALL HAVE A 28 DAY COMPRESSIVE STRENGTH OF 3,000 PSI.

REINFORCING SHALL CONFORM TO ASTM A615 GRADE 60. REINFORCING STEEL SHALL BE CONTINUOUS AND SHALL BE FABRICATED AND PLACED IN ACCORDANCE WITH ACI 315, LATEST EDITION.

WELDED WIRE FABRIC SHALL CONFORM TO ASTM A185 AND SHALL HAVE MINIMUM SIDE AND END LAPS OF ONE FOOT.

ALL ITEMS TO BE CAST INTO THE CONCRETE SUCH AS REINFORCING, SLEEVES, DOWELS, ETC. SHALL BE SECURELY POSITIONED IN THE FORMS BEFORE PLACING CONCRETE. REFER TO THE ELECTRICAL DRAWINGS FOR THE ROUTING OF ELECTRICAL CONDUIT.

REINFORCING COVER: 3" AT BOTTOMS OF FOOTINGS AND MAT SLABS
2" ELSEWHERE UNLESS NOTED OTHERWISE

NOTE: REINFORCING COVER IS MEASURED FROM THE INSIDE OF THE FORMLINER, WHERE PRESENT.

FORMLINER SHALL STOP AT ATTACHMENT AREAS OF STOP LOG FRAMES, OBSERVATION ROOM WINDOW, AND ANY OTHER ITEMS THAT ARE TO BE SECURED TO THE FACE OF THE CONCRETE WALLS. OPENING SIZES SHALL BE COORDINATED WITH THE SPECIFIC MANUFACTURERS, AS WELL AS METHODS OF ATTACHMENT AND EXPANSION BOLT SIZES AND SPACINGS.

AT CURVED WALLS, A MAXIMUM OF TWO FOOT WIDTH FORMS SHALL BE USED. THE FORMLINERS SHALL BE MODIFIED AS REQUIRED TO FORM PROPER RADIUS CURVES. FORMS SHALL BE INSTALLED SO AS TO PROVIDE FOR CONSTRUCTION OF THE DESIRED PATTERN AT ALL TIMES INCLUDING AROUND CORNERS.

RETAINING WALL NOTES

CONTRACTION AND EXPANSION JOINTS SHALL BE INSTALLED WHERE SHOWN AND PER THE DETAILS. NO OTHER CONSTRUCTION JOINTS WILL BE ALLOWED WITHOUT ACCEPTANCE BY THE ENGINEER.

BOTTOM OF FOOTING ELEVATIONS WILL BE FINALIZED AFTER THE ROCK BLASTING AND SURVEY IS COMPLETED. REFER TO THE GENERAL NOTES ABOVE.

FORMLINER SHALL EXTEND A MINIMUM OF 6 INCHES BELOW GRADE.

STEEL NOTES

STRUCTURAL STEEL SHALL CONFORM TO ASTM A36 AND SHALL RECEIVE A COLD APPLIED COATING OF GALVANIZING.

STEEL GRATING SHALL BE GALVANIZED AND SHALL BE SIZED TO SUSTAIN A DESIGN LIVE LOAD OF 100 PSF.

MISCELLANEOUS

RAILINGS SHALL BE DESIGNED TO RESIST PEDESTRIAN LOADINGS. RAILINGS SHALL BE REMOVABLE AT THE WORKER ACCESS BRIDGE, WHERE SHOWN. SUBMIT SHOP DRAWINGS DETAILING POST LOCATIONS, CONNECTIONS, AND DETAILS.

EXPANSION BOLT ANCHORAGES FOR STOP LOG FRAMES, SLUICE GATES, DOORS AND ANY OTHER EQUIPMENT SHALL BE PER THE SIZE AND SPACING AS RECOMMENDED BY THE MANUFACTURER. HOWEVER, BOLTS SHALL BE A MINIMUM OF 5/8" IN SIZE AND SHALL BE STAINLESS STEEL.

THE CONCRETE CAP SHOWN AT THE RETAINING WALLS SHALL BE CAST-IN-PLACE. REFER TO THE STANDARD DETAIL. PRECAST CONCRETE SECTIONS ARE AN OPTION. IF PRECAST SECTIONS ARE TO BE USED, CONNECTION METHODS SHALL BE SUBMITTED TO THE ENGINEER FOR REVIEW.

DIMENSIONS SHOWN ON THE DRAWINGS AND RETAINING WALL PLANS ARE OUTSIDE FACE DIMENSIONS.

NO CONSTRUCTION JOINTS, OTHER THAN THOSE SHOWN, SHALL BE ALLOWED UNLESS APPROVED BY THE ENGINEER. ALL PROPOSED CONSTRUCTION JOINTS SHALL BE SHOWN ON THE REINFORCING SHOP DRAWINGS.

ALL RETAINING WALLS SHALL BE DAMPPROOFED AND SHALL HAVE WEEPHOLES. REFER TO THE TYPICAL DETAIL. WALLS SHALL BE FOUNDED ON ROCK OR ON COMPACTED NATIVE MATERIAL. IF UNSUITABLE MATERIAL IS ENCOUNTERED, FOOTINGS SHALL BE FOUNDED ON COMPACTED GRANULAR FILL AS ORDERED BY THE ENGINEER.

Engineering, Landscape Architecture and Environmental Science
MILONE & MACBROOM®
99 Realty Drive
Cheshire, Connecticut 06410
(203) 271-1773 Fax (203) 272-9733
www.miloneandmacbroom.com

BASE BID - SITE DETAILS (1)

DESIGNED	EEL	
DRAWN	BAM	
CHECKED	JAG	

WALLACE DAM FISHWAY
QUINNIPIAC RIVER

LOCATION
RIVER ROAD & QUINNIPIAC STREET
WALLINGFORD, CONNECTICUT

DATE	NOVEMBER 2010	SHEET
SCALE	AS NOTED	09 OF 25
PROJ. NO.	3019-01	

Drawing: H:\3019-01\DWG\CURRENT\WD-DETAILS.Dwg Layout Tab:G0 BASE BID - SITE DETAILS (1)
Plotted by: BECKYM On this date: Mon, 2010 November 1 - 2:21pm

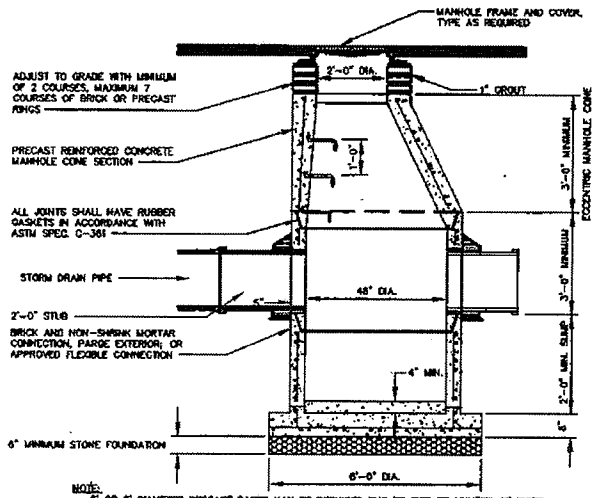

NOTE:
5' OR 6' DIAMETER PRECAST BASES MAY BE REQUIRED DUE TO SIZE OR NUMBER OF PIPES AT THE MANHOLE. PRECAST REDUCERS WILL BE PLACED ABOVE THE 5' OR 6' BASES AS DIRECTED BY THE ENGINEER. WALL THICKNESS TO INCREASE BY 1" FOR EACH 1'-0" OF INSIDE DIAMETER.

PRECAST CONCRETE STORM DRAINAGE MANHOLE
N.T.S.

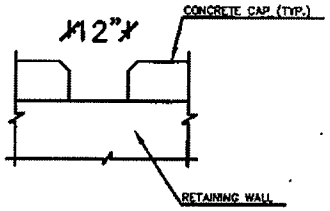

NOTE: 1. FOR RETAINING WALLS AT SIDEWALKS.
2. SCUPPERS SHALL BE SPACED 20' ON CENTER.
3. SCUPPERS SHALL HAVE A 2% SLOPE TOWARDS THE CHANNEL.

SCUPPER DRAIN @ CHANNEL WALLS
N.T.S.

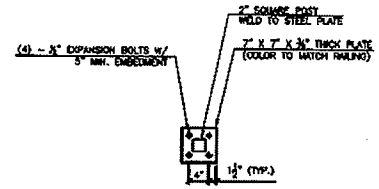

ORNAMENTAL FENCE CONNECTION DETAIL
SCALE: N.T.S.

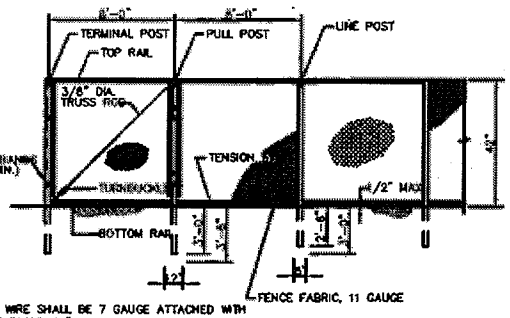

NOTES:
1. BOTTOM TENSION WIRE SHALL BE 7 GAUGE ATTACHED WITH 12I GAUGE HOG RINGS, 12" O.C.
2. TOP RAIL COUPLINGS SHALL BE EVERY 20'. EXPANSION COUPLINGS SHALL BE SPACED AT 100' INTERVALS.
3. TOP RAIL WIRE TIES SHALL BE SPACED AT 24" MAX.
4. THE CONTRACTOR SHALL PROVIDE SHOP DRAWINGS TO THE ENGINEER FOR APPROVAL PRIOR TO CONSTRUCTION.
5. PROVIDE BOTH TOP & BOTTOM RAIL (1 5/8" O.D.) ALONG ENTIRE RUN OF FENCE AND AT ALL GATES.

CHAIN LINK FENCE DETAIL
NOT TO SCALE

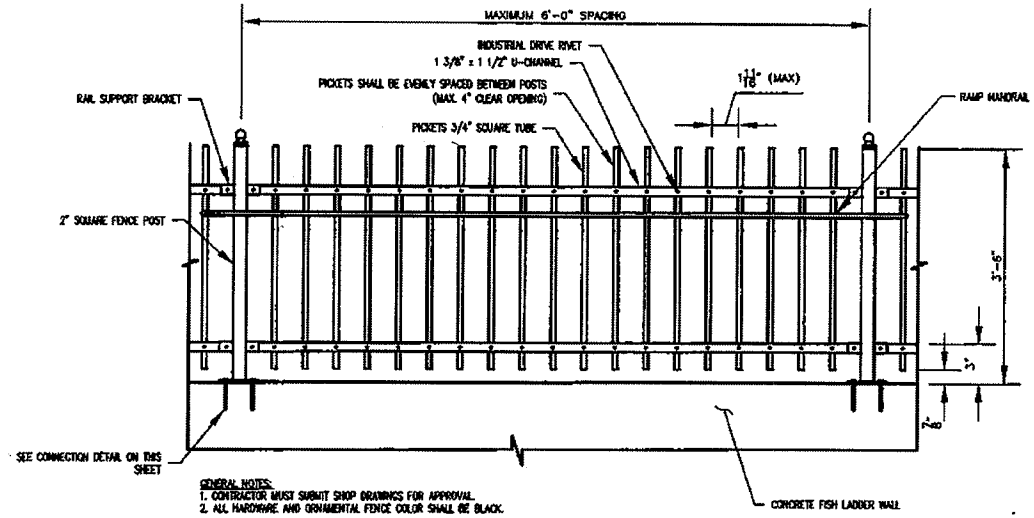

GENERAL NOTES:
1. CONTRACTOR MUST SUBMIT SHOP DRAWINGS FOR APPROVAL.
2. ALL HARDWARE AND ORNAMENTAL FENCE COLOR SHALL BE BLACK.

RAMP HANDRAIL NOTES:
1. HANDRAILS SHALL BE PROVIDED ALONG BOTH SIDES OF RAMP SEGMENTS.
2. HANDRAILS SHALL EXTEND AT LEAST 12" BEYOND THE TOP AND BOTTOM OF TH RAMP SEGMENT AND SHALL BE PARALLEL WITH THE FLOOR OR GROUND SURFACE.
3. THE CLEAR SPACE BETWEEN THE HANDRAIL AND THE FENCE SHALL BE 1 1/2".
4. TOP OF HANDRAIL GRIPPING SURFACES SHALL BE MOUNTED BETWEEN 34" AND 38" ABOVE RAMP SURFACES.
5. ENDS OF HANDRAILS SHALL BE ROUNDED.
6. ALL HANDRAILS SHALL HAVE A CIRCULAR CROSS SECTION WITH AN OUTSIDE DIAMETER OF AT LEAST 1 1/4" AND NOT GREATER THAN 2".

ORNAMENTAL FENCE WITH MOUNTED HANDRAIL
SCALE: N.T.S.

Engineering, Landscape Architecture and Environmental Science
MILONE & MACBROOM®
99 Realty Drive
Cheshire, Connecticut 06410
(203) 271-1773 Fax (203) 272-9733
www.miloneandmacbroom.com

BASE BID - SITE DETAILS (2)

DESIGNED	EEL	
DRAWN	BAM	
CHECKED	JAG	

WALLACE DAM FISHWAY
QUINNIPIAC RIVER

LOCATION
RIVER ROAD & QUINNIPIAC STREET
WALLINGFORD, CONNECTICUT

DATE	NOVEMBER 2010
SCALE	AS NOTED
PROJ. NO.	3019-01

SHEET
10 OF 25

Drawing: H:\3019-01\DWG\CURRENT\WD-DETAILS.DWG Layout: Tab:09 BASE BID - SITE DETAILS (2)
Plotted by: BECKYM On this date: Mon, 2010 November 1 - 2:21pm

SEDIMENT & EROSION CONTROL SPECIFICATIONS

GENERAL:

THESE GUIDELINES SHALL APPLY TO ALL WORK CONSISTING OF ANY AND ALL TEMPORARY AND/OR PERMANENT MEASURES TO CONTROL WATER POLLUTION AND SOIL EROSION, AS MAY BE REQUIRED, DURING THE CONSTRUCTION OF THE PROJECT.

IN GENERAL, ALL CONSTRUCTION ACTIVITIES SHALL PROCEED IN SUCH A MANNER SO AS NOT TO POLLUTE ANY WETLANDS, WATERCOURSE, WATERBODY, AND CONDUIT CARRYING WATER, ETC. THE CONTRACTOR SHALL LIMIT, INSOFAR AS POSSIBLE, THE SURFACE AREA OF EARTH MATERIALS EXPOSED BY CONSTRUCTION METHODS AND IMMEDIATELY PROVIDE PERMANENT AND TEMPORARY POLLUTION CONTROL MEASURES TO PREVENT CONTAMINATION OF ADJACENT WETLANDS, WATERCOURSES, AND WATERBODIES, AND TO PREVENT, INSOFAR AS POSSIBLE, EROSION ON THE SITE.

LAND GRADING

GENERAL:

1. THE RESHAPING OF THE GROUND SURFACE BY EXCAVATION AND FILLING OR A COMBINATION OF BOTH, TO OBTAIN PLANNED GRADES, SHALL PROCEED IN ACCORDANCE WITH THE FOLLOWING CRITERIA:

   a. THE CUT FACE OF EARTH EXCAVATION SHALL NOT BE STEEPER THAN TWO HORIZONTAL TO ONE VERTICAL (2:1).

   b. THE PERMANENT EXPOSED FACES OF FILLS SHALL NOT BE STEEPER THAN TWO HORIZONTAL TO ONE VERTICAL (2:1).

   c. THE CUT FACE OF ROCK EXCAVATION SHALL NOT BE STEEPER THAN ONE HORIZONTAL TO FOUR VERTICAL (1:4).

   d. PROVISION SHOULD BE MADE TO CONDUCT SURFACE WATER SAFELY TO STORM DRAINS TO PREVENT SURFACE RUNOFF FROM DAMAGING CUT FACES AND FILL SLOPES.

   e. EXCAVATIONS SHOULD NOT BE MADE SO CLOSE TO PROPERTY LINES AS TO ENDANGER ADJOINING PROPERTY WITHOUT PROTECTING SUCH PROPERTY FROM EROSION, SLIDING, SETTLING, OR CRACKING.

   f. NO FILL SHOULD BE PLACED WHERE IT WILL SLIDE OR WASH UPON THE PREMISES OF ANOTHER OWNER OR UPON ADJACENT WETLANDS, WATERCOURSES, OR WATERBODIES.

   g. PRIOR TO ANY REGRADING, A STABILIZED CONSTRUCTION ENTERANCE SHALL BE PLACED AT THE ENTRANCE TO THE WORK AREA IN ORDER TO REDUCE MUD AND OTHER SEDIMENTS FROM LEAVING THE SITE.

TOPSOILING

GENERAL:

1. TOPSOIL SHALL BE SPREAD OVER ALL EXPOSED AREAS IN ORDER TO PROVIDE A SOIL MEDIUM HAVING FAVORABLE CHARACTERISTICS FOR THE ESTABLISHMENT, GROWTH, AND MAINTENANCE OF VEGETATION.
2. UPON ATTAINING FINAL SUBGRADES, SCARIFY SURFACE TO PROVIDE A GOOD BOND WITH TOPSOIL.
3. REMOVE ALL LARGE STONES, TREE LIMBS, ROOTS AND CONSTRUCTION DEBRIS.
4. APPLY LIME ACCORDING TO SOIL TEST OR AT THE RATE OF TWO (2) TONS PER ACRE.

MATERIAL:

1. TOPSOIL SHOULD HAVE PHYSICAL, CHEMICAL, AND BIOLOGICAL CHARACTERISTICS FAVORABLE TO THE GROWTH OF PLANTS.
2. TOPSOIL SHOULD HAVE A SANDY OR LOAMY TEXTURE.
3. TOPSOIL SHOULD BE RELATIVELY FREE OF SUBSOIL MATERIAL AND MUST BE FREE OF STONES (OVER 1" IN DIAMETER), LUMPS OF SOIL, ROOTS, TREE LIMBS, TRASH, OR CONSTRUCTION DEBRIS. IT SHOULD BE FREE OF ROOTS OR RHIZOMES SUCH AS THISTLE, NUTGRASS, AND QUACKGRASS.
4. AN ORGANIC MATTER CONTENT OF SIX PERCENT (6%) IS REQUIRED. AVOID LIGHT COLORED SUBSOIL MATERIAL.
5. SOLUBLE SALT CONTENT OF OVER 500 PARTS PER MILLION (PPM) IS LESS SUITABLE. AVOID TIDAL MARSH SOILS BECAUSE OF HIGH SALT CONTENT AND SULFUR ACIDITY.
6. THE pH SHOULD BE MORE THAN 6.0. IF LESS, ADD LIME TO INCREASE pH TO AN ACCEPTABLE LEVEL.

APPLICATION

1. AVOID SPREADING WHEN TOPSOIL IS WET OR FROZEN.
2. SPREAD TOPSOIL UNIFORMLY TO A DEPTH OF AT LEAST FOUR INCHES (4"), OR TO THE DEPTH SHOWN ON THE LANDSCAPING PLANS.

TEMPORARY VEGETATIVE COVER

GENERAL:

1. TEMPORARY VEGETATIVE COVER SHALL BE ESTABLISHED ON ALL UNPROTECTED AREAS THAT PRODUCE SEDIMENT, AREAS WHERE FINAL GRADING HAS BEEN COMPLETED, AND AREAS WHERE THE ESTIMATED PERIOD OF BARE SOIL EXPOSURE IS LESS THAN 12 MONTHS. TEMPORARY VEGETATIVE COVER SHALL BE APPLIED IF AREAS WILL NOT BE PERMANENTLY SEEDED BY SEPTEMBER 1.

SITE PREPARATION:

1. INSTALL REQUIRED SURFACE WATER CONTROL MEASURES.
2. REMOVE LOOSE ROCK, STONE, AND CONSTRUCTION DEBRIS FROM AREA.
3. APPLY LIME ACCORDING TO SOIL TEST OR AT A RATE OF ONE (1) TON OF GROUND DOLOMITIC LIMESTONE PER ACRE (5 LBS. PER 100 SQ. FT.).
4. APPLY FERTILIZER ACCORDING TO SOIL TEST OR AT THE RATE OF 300 LBS. OF 10-10-10 PER ACRE (7 LBS. PER 1,000 SQ. FT.) AND SECOND APPLICATION OF 200 LBS. OF 10-10-10- (5 LBS. PER 1,000 SQ. FT.) WHEN GRASS IS FOUR INCHES (4") TO SIX INCHES (6") HIGH. APPLY ONLY WHEN GRASS IS DRY.
5. UNLESS HYDROSEEDED, WORK IN LIME AND FERTILIZER TO A DEPTH OF FOUR (4") INCHES USING A DISK OR ANY SUITABLE EQUIPMENT.
6. TILLAGE SHOULD ACHIEVE A REASONABLY UNIFORM LOOSE SEEDBED. WORK ON CONTOUR IF SITE IS SLOPING.

ESTABLISHMENT:

1. SELECT APPROPRIATE SPECIES FOR THE SITUATION. NOTE RATES AND SEEDING DATES (SEE VEGETATIVE COVER SELECTION & MULCHING SPECIFICATION BELOW).
2. APPLY SEED UNIFORMLY ACCORDING TO THE RATE INDICATED BY BROADCASTING, DRILLING, OR HYDRAULIC APPLICATION.
3. UNLESS HYDROSEEDED, COVER RYEGRASS SEEDS WITH NOT MORE THAN 1/4 INCH OF SOIL USING SUITABLE EQUIPMENT.
4. MULCH IMMEDIATELY AFTER SEEDING IF REQUIRED. (SEE VEGETATIVE COVER SELECTION & MULCHING SPECIFICATION BELOW.) APPLY STRAW OR HAY MULCH AND ANCHOR TO SLOPES GREATER THAN 3% OR WHERE

PERMANENT VEGETATIVE COVER

GENERAL:

1. PERMANENT VEGETATIVE COVER SHALL BE ESTABLISHED AS VARIOUS SECTIONS OF THE PROJECT ARE COMPLETED IN ORDER TO STABILIZE THE SOIL, REDUCE DOWNSTREAM DAMAGE FROM SEDIMENT AND RUNOFF, AND TO ENHANCE THE AESTHETIC NATURE OF THE SITE. IT WILL BE APPLIED TO ALL CONSTRUCTION AREAS SUBJECT TO EROSION WHERE FINAL GRADING HAS BEEN COMPLETED AND A PERMANENT COVER IS NEEDED.

SITE PREPARATION:

1. INSTALL REQUIRED SURFACE WATER CONTROL MEASURES.
2. REMOVE LOOSE ROCK, STONE, AND CONSTRUCTION DEBRIS FROM AREA.
3. PERFORM ALL PLANTING OPERATIONS PARALLEL TO THE CONTOURS OF THE SLOPE.
4. APPLY TOPSOIL AS INDICATED ELSEWHERE HEREIN.
5. APPLY FERTILIZER ACCORDING TO SOIL TEST OR:

   * SPREAD SEEDING: WORK DEEPLY IN SOIL, BEFORE SEEDING, 300 LBS. OF 10-10-10 FERTILIZER PER ACRE (7 LBS. PER 1,000 SQ. FT.); THEN SIX (6) TO EIGHT (8) WEEKS LATER, APPLY ON THE SURFACE AN ADDITIONAL 300 LBS. OF 10-10-10 FERTILIZER PER ACRE. AFTER SEPTEMBER 1, TEMPORARY VEGETATIVE COVER SHALL BE APPLIED.

   * FALL SEEDING: WORK DEEPLY IN SOIL, BEFORE SEEDING, 600 LBS. OF 10-10-10 FERTILIZER PER ACRE (14 LBS. PER 1,000 SQ. FT.).

VEGETATIVE COVER SELECTION & MULCHING

TEMPORARY VEGETATIVE COVER:

PERENNIAL RYEGRASS 3 LBS./1,000 SQ.FT.
(LOLIUM PERENNE)

* PERMANENT VEGETATIVE COVER:

BARON KENTUCKY BLUEGRASS	60%
JAMESTOWN II CHEWINGS FESCUE	20%
PALMER PERENNIAL RYEGRASS	20%

* LOFTS – "TRIPLEX GENERAL" MIX OR APPROVED EQUAL. RECOMMENDED TIME SEEDING. 5 LB./1000 S.F. SEEDING RATE.

SPRING SEEDING: 4/1 to 5/31

FALL SEEDING: 8/16 to 10/15

TEMPORARY MULCHING:

STRAW OR HAY 70-90 LBS./1,000 SQ.FT.
(TEMPORARY VEGETATIVE AREAS)

WOOD FIBER IN HYDROMULCH SLURRY 25-50 LBS./1,000 SQ. FT.

ESTABLISHMENT:

1. SMOOTH AND FIRM SEEDBED WITH CULTIPACKER OR OTHER SIMILAR EQUIPMENT PRIOR TO SEEDING (EXCEPT WHEN HYDROSEEDING).
2. SELECT ADAPTED SEED MIXTURE FOR THE SPECIFIC SITUATION. NOTE RATES AND THE SEEDING DATES (SEE VEGETATIVE COVER SELECTION & MULCHING SPEC. BELOW).
3. APPLY SEED UNIFORMLY ACCORDING TO RATE INDICATED, BY BROADCASTING, DRILLING, OR HYDRAULIC APPLICATION.
4. COVER GRASS AND LEGUME SEED WITH NOT MORE THAN 1/4 INCH OF SOIL WITH SUITABLE EQUIPMENT (EXCEPT WHEN HYDROSEEDING).
5. MULCH IMMEDIATELY AFTER SEEDING, IF REQUIRED, ACCORDING TO TEMPORARY MULCHING SPECIFICATIONS. (SEE VEGETATIVE COVER SELECTION & MULCHING SPECIFICATION BELOW).
6. USE PROPER INOCULANT ON ALL LEGUME SEEDINGS, USE FOUR (4) TIMES NORMAL RATES WHEN HYDROSEEDING.
7. USE SOD WHERE THERE IS A HEAVY CONCENTRATION OF WATER AND IN CRITICAL AREAS WHERE IT IS IMPORTANT TO GET A QUICK VEGETATIVE COVER TO PREVENT EROSION.

MAINTENANCE:

1. TEST FOR SOIL ACIDITY EVERY THREE (3) YEARS AND LIME AS REQUIRED.
2. ON SITES WHERE GRASSES PREDOMINATE, BROADCAST ANNUALLY 500 POUNDS OF 10-10-10 FERTILIZER PER ACRE (12 LBS. PER 1,000 SQ. FT.) OR AS NEEDED ACCORDING TO ANNUAL SOIL TESTS.
3. ON SITES WHERE LEGUMES PREDOMINATE, BROADCAST EVERY THREE (3) YEARS OR AS INDICATED BY SOIL TEST 300 POUNDS OF 0-20-20 OR EQUIVALENT PER ACRE (8 LBS PER 1,000 SQ. FT.).

EROSION CHECKS

GENERAL:

1. TEMPORARY PERVIOUS BARRIERS USING BALES OF HAY OR STRAW, HELD IN PLACE WITH STAKES DRIVEN THROUGH THE BALES AND INTO THE GROUND OR GEOTEXTILE FABRIC FASTENED TO A FENCE POST AND BURIED INTO THE GROUND, SHALL BE INSTALLED AND MAINTAINED AS REQUIRED TO CHECK EROSION AND REDUCE SEDIMENTATION.

CONSTRUCTION:

1. BALES SHOULD BE PLACED IN A ROW WITH ENDS TIGHTLY ABUTTING THE ADJACENT BALES.
2. EACH BALE SHALL BE EMBEDDED INTO THE SOIL A MINIMUM OF FOUR (4") INCHES.
3. BALES SHALL BE SECURELY ANCHORED IN PLACE BY WOOD STAKES OR REINFORCEMENT BARS DRIVEN THROUGH THE BALES AND INTO THE GROUND. THE FIRST STAKE IN EACH BALE SHALL BE ANGLED TOWARD THE PREVIOUSLY LAID BALE TO FORCE BALES TOGETHER.
4. GEOTEXTILE FABRIC SHALL BE SECURELY ANCHORED AT THE TOP OF A THREE FOOT (3') HIGH FENCE AND BURIED A MINIMUM OF FOUR INCHES (4") TO THE SOIL. SEAMS BETWEEN SECTIONS OF FILTER FABRIC SHALL OVERLAP A MINIMUM OF TWO FEET (2').

INSTALLATION AND MAINTENANCE:

1. BALED HAY EROSION BARRIERS SHALL BE INSTALLED AT ALL STORM SEWER INLETS.
2. BALED HAY EROSION BARRIERS AND GEOTEXTILE FENCE SHALL BE INSTALLED AT THE LOCATION INDICATED ON THE PLAN AND IN ADDITIONAL AREAS AS MAY BE DEEMED APPROPRIATE DURING CONSTRUCTION.
3. ALL EROSION CHECKS SHALL BE MAINTAINED UNTIL ADJACENT AREAS ARE STABILIZED.
4. INSPECTION SHALL BE FREQUENT (AT MINIMUM MONTHLY AND BEFORE AND AFTER HEAVY RAIN) AND REPAIR OR REPLACEMENT SHALL BE MADE PROMPTLY AS NEEDED.
5. EROSION CHECKS SHALL BE REMOVED WHEN THEY HAVE SERVED THEIR USEFULNESS SO AS NOT TO BLOCK OR IMPEDE STORMWATER FLOW OR DRAINAGE.

Engineering, Landscape Architecture and Environmental Science
MILONE & MACBROOM®
99 Realty Drive
Cheshire, Connecticut 06410
(203) 271-1773 Fax (203) 272-9733
www.miloneandmacbroom.com

BASE BID - SEDIMENT AND EROSION CONTROL NOTES

WALLACE DAM FISHWAY
QUINNIPIAC RIVER

DESIGNED	EEL
DRAWN	BAM
CHECKED	JAG

LOCATION
RIVER ROAD & QUINNIPIAC STREET
WALLINGFORD, CONNECTICUT

DATE	NOVEMBER 2010
SCALE	---
PROJ. NO.	3019-01

Drawing: H:\3019-01\DWG\CURRENT\WD-DETAILS.DWG layout Tab:10 BASE BID - SEDIMENT AND EROSION CONTROL NOTES Plotted by: BECKYM On this date: Mon, 2010 November 1 - 2:21pm

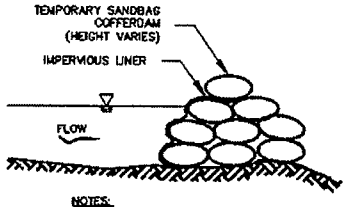

NOTES:

1. COFFERDAM AND PUMP SYSTEM TO BE SIZED FOR NORMAL FLOW CONDITIONS.

TEMPORARY SANDBAG COFFERDAM DETAIL

N.T.S.

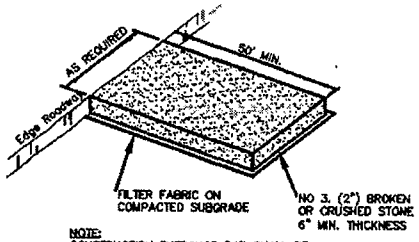

NOTE:
CONSTRUCTION ENTRANCE PAD SHALL BE INSTALLED AND MAINTAINED DURING OPERATIONS WHICH PROMOTE VEHICULAR TRACKING OF MUD.

CONSTRUCTION ENTRANCE PAD

N.T.S.

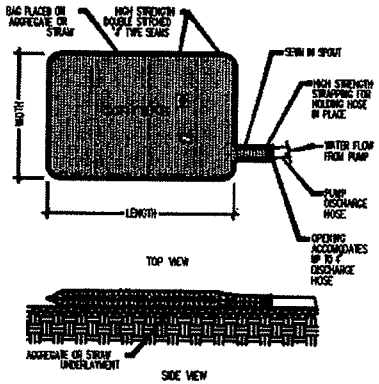

* TO BE USED WITH DEWATERING OPERATION

NOTE:
SIZE AND MODEL TO BE DETERMINED BASED ON INDIVIDUAL DEWATERING OPERATIONS. CONTRACTOR TO FOLLOW MANUFACTURER GUIDELINES.

DETAIL OF DIRTBAG PUMPED SILT CONTROL SYSTEM

N.T.S.

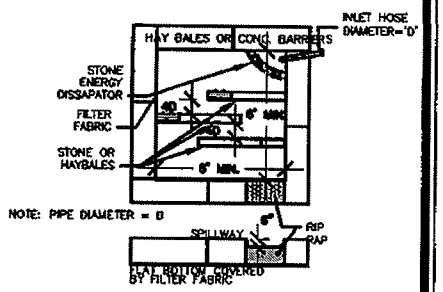

NOTE:
IF PUMPING VOLUME EXCEEDS BASIN CAPACITY, BASIN MAY BE USED IN TANDEM OR TIERS.

DEWATERING BASIN

N.T.S.

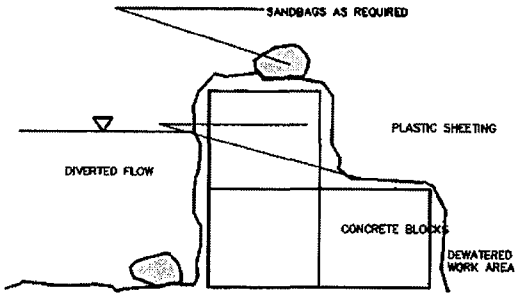

CONCRETE BLOCK COFFERDAM

N.T.S.

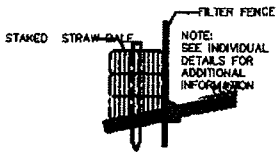

NOTE:
SEE INDIVIDUAL DETAILS FOR ADDITIONAL INFORMATION

SEDIMENT FILTER FENCE AND HAYBALE

N.T.S.

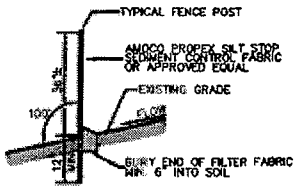

SEDIMENT FILTER FENCE

N.T.S.

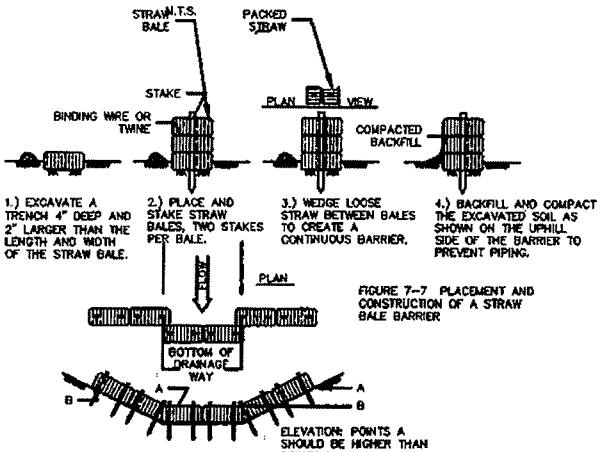

FIGURE 7-7 PLACEMENT AND CONSTRUCTION OF A STRAW BALE BARRIER

PLACEMENT & CONSTRUCTION OF

A STRAW BALE BARRIER

N.T.S.

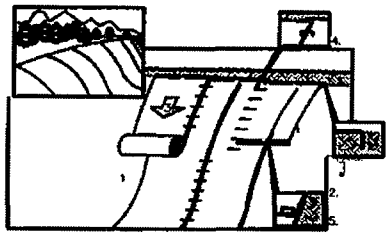

1. PREPARE SOIL BEFORE INSTALLING BLANKETS, INCLUDING APPLICATION OF LIME, FERTILIZER, AND SEED. NOTE: WHEN USING SCC225, DO NOT SEED PREPARED AREA. SCC225 MUST BE INSTALLED WITH PAPER SIDE DOWN.
2. BEGIN AT THE TOP OF THE SLOPE BY ANCHORING THE BLANKET IN A 6" DEEP BY 6" WIDE TRENCH. BACKFILL AND COMPACT THE TRENCH AFTER STAPLING.
3. ROLL THE BLANKETS DOWN THE SLOPE IN THE DIRECTION OF THE WATER FLOW.
4. THE EDGES OF PARALLEL BLANKETS MUST BE STAPLED WITH APPROXIMATELY 2" OVERLAP.
5. WHEN BLANKETS MUST BE SPLICED DOWN THE SLOPE, PLACE BLANKETS END OVER END (SHINGLE STYLE) WITH APPROXIMATELY 6" OVERLAP. STAPLE THROUGH OVERLAP AREA, APPROXIMATELY 12" APART.

REFER TO GENERAL STAPLE PATTERN GUIDE IN NORTH AMERICAN GREEN CATALOG FOR CORRECT STAPLE PATTERN RECOMMENDATIONS FOR SLOPE INSTALLATIONS.

APPLICATION OF EROSION CONTROL

BLANKET ON SLOPES

N.T.S.

Engineering, Landscape Architecture and Environmental Science

MILONE & MACBROOM®

99 Realty Drive
Cheshire, Connecticut 06410
(203) 271-1773 Fax (203) 272-9733
www.miloneandmacbroom.com

BASE BID - SEDIMENT AND EROSION CONTROL DETAILS

DESIGNED	EEL	
DRAWN	BAM	WALLACE DAM FISHWAY QUINNIPIAC RIVER
CHECKED	JAG	

LOCATION

RIVER ROAD & QUINNIPIAC STREET
WALLINGFORD, CONNECTICUT

DATE	NOVEMBER 2010	SHEET
SCALE	AS NOTED	12 OF 25
PROJ. NO.	3019-01	

Drawing: H:\3019-01\DWG\CURRENT\WD-DETAILS.DWG Layout: Page-1 BASE BID - SEDIMENT AND EROSION CONTROL DETAILS
Plotted by: BECKYM On this date: Mon, 2010 November 1 - 2:21pm

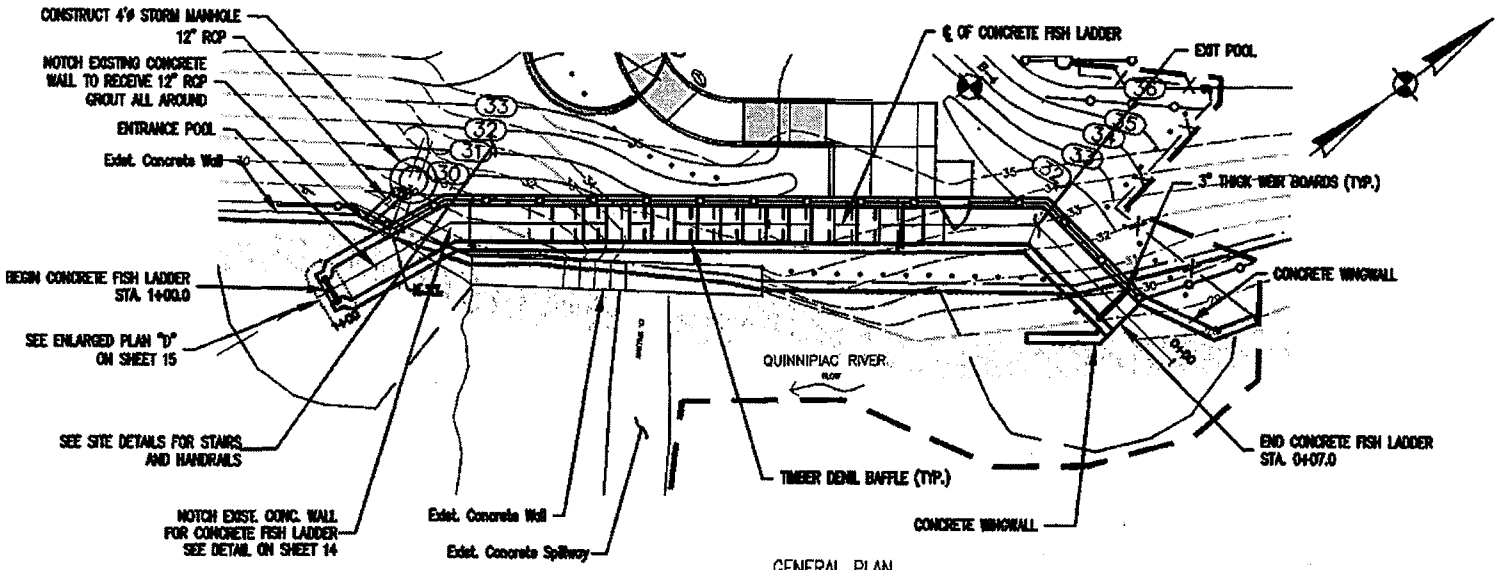

GENERAL PLAN
SCALE: 1"=20'

LEGEND
C.J. – CONTRACTION JOINT
E.J. – EXPANSION JOINT
T.W. – TOP OF WALL ELEVATION
– BORING LOCATION

GENERAL NOTES:

SPECIFICATIONS: CONNECTICUT DEPARTMENT OF TRANSPORTATION FORM 816 (2004), SUPPLEMENTAL SPECIFICATIONS DATED JULY 2007 AND SPECIAL PROVISIONS.

DESIGN SPECIFICATIONS: STANDARD SPECIFICATIONS FOR HIGHWAY BRIDGES (AASHTO-2004), WITH THE INTERIM SPECIFICATIONS UP TO AND INCLUDING (JULY 2007), AS SUPPLEMENTED BY THE CONNECTICUT DEPARTMENT OF TRANSPORTATION BRIDGE DESIGN MANUAL (2003).

ALLOWABLE DESIGN STRESSES:
CLASS "A" BASED ON f'c = 3000 psi
CLASS "S" BASED ON f'c = 3000 psi

REINFORCEMENT
(ASTM A615 GRADE 60) fy = 60000 psi

FOUNDATION PRESSURES: THE VARIOUS GROUP LOADINGS NOTED ON THE SUBSTRUCTURE PLAN SHEETS REFER TO THE GROUP LOADS AS GIVEN IN THE AASHTO STANDARD SPECIFICATIONS FOR HIGHWAY BRIDGES.

REFER TO SITE MECHANICAL AND ELECTRICAL DRAWINGS FOR THE SIZE AND LOCATION OF OPENINGS AND DETAILS NOT SHOWN ON THE STRUCTURAL DRAWINGS. ALL DIMENSIONS AND ELEVATIONS ARE TO BE COORDINATED WITH THE SITE DRAWINGS. NOTIFY THE ENGINEER OF ANY DISCREPENCIES.

ALL TIMBER DIMENSIONS SHOWN ARE ACTUAL WIDTH.

CONCRETE NOTES:

REMAIN-IN-PLACE FORMS: THE USE OF REMAIN-IN-PLACE FORMS ON THIS STRUCTURE IS NOT ALLOWED.

CLASS "A" CONCRETE: CLASS "A" CONCRETE SHALL BE USED FOR ALL RETAINING WALLS, VIEWING ROOM, AND FISH LADDER.

CLASS "S" CONCRETE: CLASS "S" CONCRETE SHALL BE USED AT EXISTING WALL REPAIR.

CONCRETE NOTES (CONT.):

EXPOSED EDGES: EXPOSED EDGES OF CONCRETE SHALL BE BEVELED 3/4" X 3/4" UNLESS DIMENSIONED OTHERWISE.

REINFORCING COVER: 3" AT BOTTOM OF FOOTINGS AND MAT SLABS
2" ELSEWHERE UNLESS NOTED OTHERWISE
NOTE: REINFORCING COVER IS MEASURED FROM THE INSIDE OF THE FORMLINER, WHERE PRESENT.

REINFORCEMENT: ALL REINFORCEMENT SHALL BE ASTM A615 GRADE 60.

PREFORMED EXPANSION JOINT FILLER: THE COST OF FURNISHING AND INSTALLING PREFORMED EXPANSION JOINT FILLER SHALL BE INCLUDED IN THE COST OF THE ITEM "CLASS 'A' CONCRETE."

CONSTRUCTION JOINTS: CONSTRUCTION JOINTS, OTHER THAN THOSE SHOWN ON THE PLANS, WILL NOT BE PERMITTED WITHOUT THE PRIOR APPROVAL OF THE ENGINEER.

RETAINING WALL NOTES:

CONTRACTION AND EXPANSION JOINTS SHALL BE INSTALLED WHERE SHOWN AND PER THE DETAILS. NO OTHER CONSTRUCTION JOINTS WILL BE ALLOWED WITHOUT ACCEPTANCE BY THE ENGINEER.

FORMLINER SHALL EXTEND A MINIMUM OF 6 INCHES BELOW GRADE.

STEEL NOTES:

STRUCTURAL STEEL SHALL CONFORM TO ASTM A36 AND SHALL RECEIVE A COLD APPLIED COATING OF GALVANIZING.

2" GRATING SHALL BE ALUMINUM AND SHALL BE SIZED TO SUSTAIN A DESIGN LIVE LOAD OF 85 PSF. ALL ALUMINUM SURFACES IN CONTACT WITH CONCRETE SHALL BE COATED WITH BITUMINOUS PAINT.

Engineering, Landscape Architecture and Environmental Science
MILONE & MACBROOM®
99 Realty Drive
Cheshire, Connecticut 06410
(203) 271-1773 Fax (203) 272-9733
www.miloneandmacbroom.com

BASE BID - STRUCTURAL FISH LADDER DETAILS (1)

DESIGNED	KP	
DRAWN	TEB	
CHECKED	KP	

WALLACE DAM FISHWAY
QUINNIPIAC RIVER

LOCATION
RIVER ROAD & QUINNIPIAC STREET
WALLINGFORD, CONNECTICUT

DATE	NOVEMBER 2010	SHEET
SCALE	AS NOTED	13 OF 25
PROJ. NO.	3019-01	

Drawing: H:\3019-01\DWG\CURRENT\WD-STR-DETAILS.DWG Layout Tab:12 BASE BID - STRUCTURAL FISH LADDER DETAILS (1)
Plotted by: BECKYW On this date: May, 2012 November 1 - 2:21pm

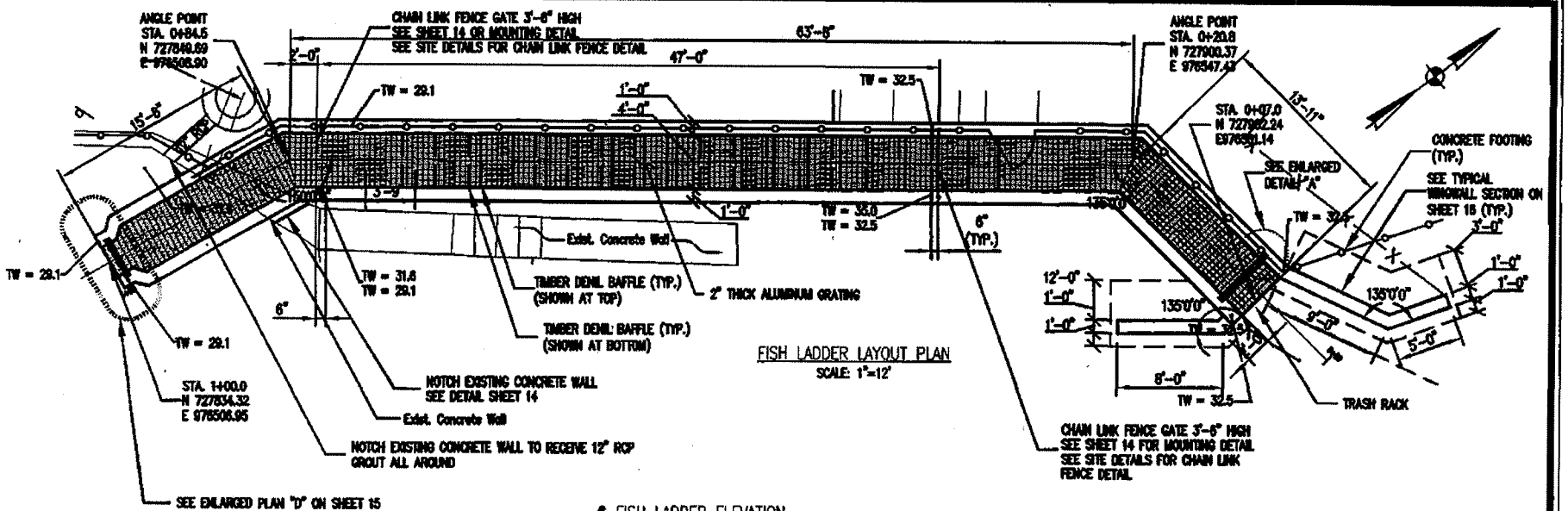

FISH LADDER LAYOUT PLAN
SCALE: 1"=12'

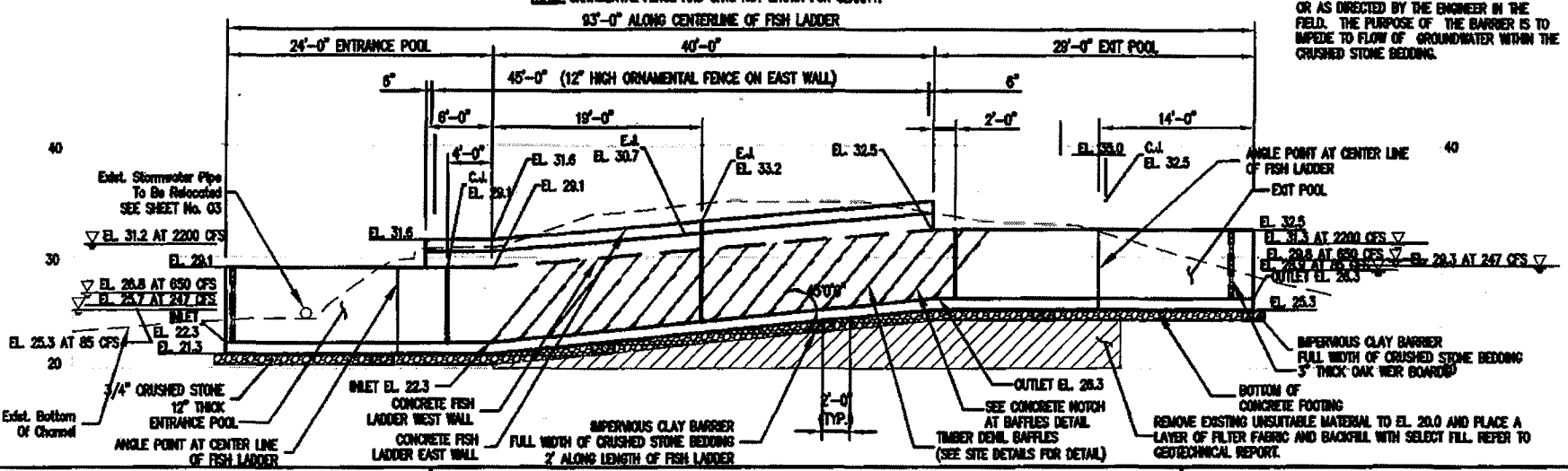

FISH LADDER ELEVATION
SCALE: 1"=15'
NOTE: ORNAMENTAL FENCE AND GATE NOT SHOWN FOR CLARITY.

NOTE: IMPERVIOUS CLAY BARRIER SHALL BE CONSTRUCTED AT A SPACING OF 20' O.C. MIN. OR AS DIRECTED BY THE ENGINEER IN THE FIELD. THE PURPOSE OF THE BARRIER IS TO IMPEDE TO FLOW OF GROUNDWATER WITHIN THE CRUSHED STONE BEDDING.

Engineering, Landscape Architecture and Environmental Science
MILONE & MACBROOM®
99 Realty Drive
Cheshire, Connecticut 06410
(203) 271-1773 Fax (203) 272-9733
www.miloneandmacbroom.com

BASE BID - STRUCTURAL FISH LADDER DETAILS (2)

DESIGNED	KP
DRAWN	TEB
CHECKED	KP

WALLACE DAM FISHWAY
QUINNIPIAC RIVER

LOCATION
RIVER ROAD & QUINNIPIAC STREET
WALLINGFORD, CONNECTICUT

DATE	NOVEMBER 2010
SCALE	AS NOTED
PROJ. NO.	3019-01

SHEET

Drawing: H:\3019-01\DWG\CURRENT\WD-STR-DETAILS.DWG Layout Tab:13 BASE BID - STRUCTURAL FISH LADDER DETAILS (2)
Plotted by: BECKYM On this date: Mon, 2010 November 1 - 2:21pm

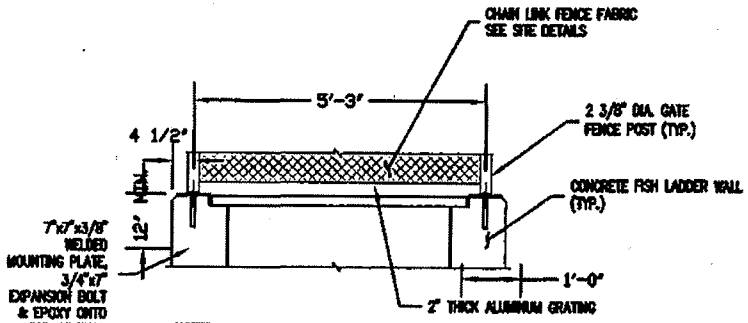

NOTES:
1. THE CONTRACTOR SHALL PROVIDE SHOP DRAWINGS TO THE ENGINEER FOR APPROVAL PRIOR TO CONSTRUCITON.
2. ALL HARDWARE AND GATE POSTS, CHAIN LINK FABRIC TO BE BLACK COLOR.

CHAIN LINK FENCE GATE CONNECTION DETAIL
AT FISH LADDER
SCALE: 1"=4'

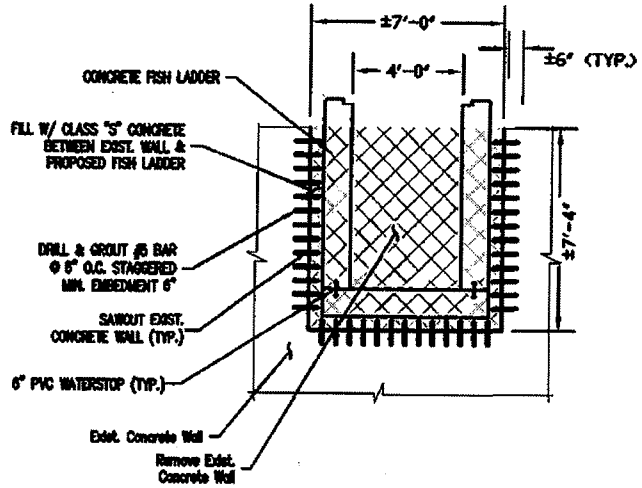

NOTES: 2" GRATING NOT SHOWN FOR CLARITY

EXISTING WALL NOTCH DETAIL
SCALE: 1"=8'

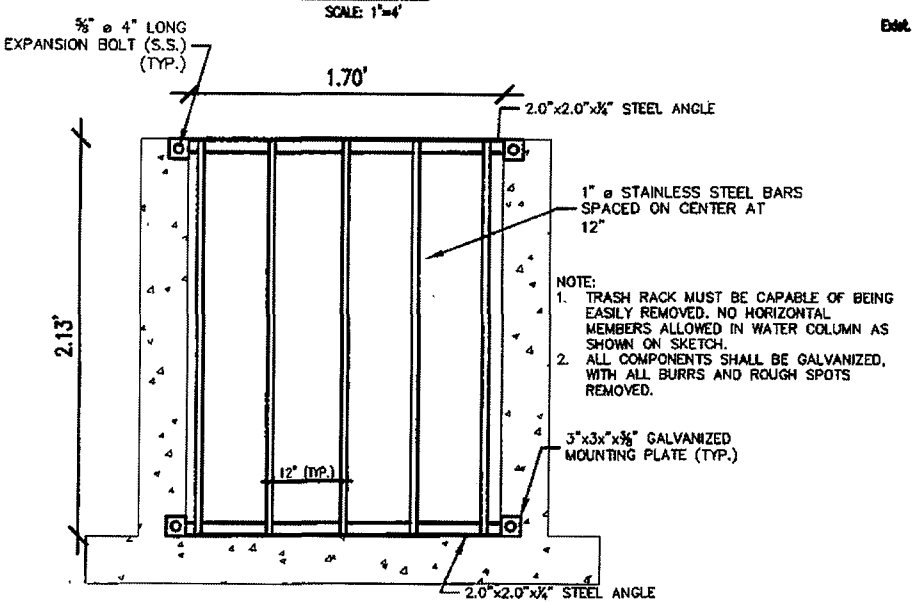

NOTE:
1. TRASH RACK MUST BE CAPABLE OF BEING EASILY REMOVED. NO HORIZONTAL MEMBERS ALLOWED IN WATER COLUMN AS SHOWN ON SKETCH.
2. ALL COMPONENTS SHALL BE GALVANIZED, WITH ALL BURRS AND ROUGH SPOTS REMOVED.

TRASH RACK SECTION
N.T.S.

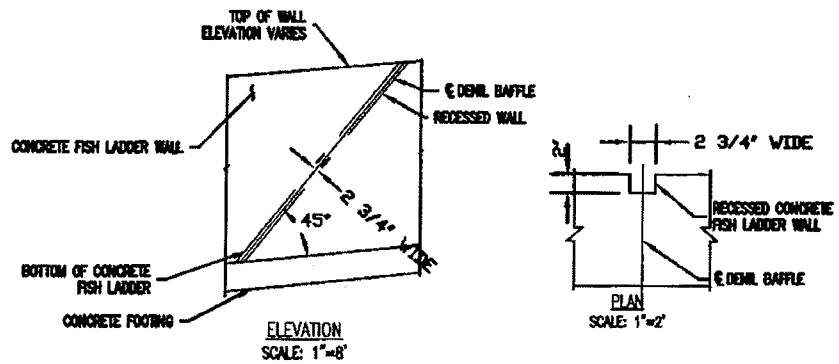

ELEVATION
SCALE: 1"=8'

PLAN
SCALE: 1"=2'

TYPICAL RECESS CONCRETE FISH LADDER WALL
DETAIL AT DENIL BAFFLE

Engineering.
Landscape Architecture
and Environmental Science
MILONE & MACBROOM®
99 Realty Drive
Cheshire, Connecticut 06410
(203) 271-1773 Fax (203) 272-9733
www.miloneandmacbroom.com

BASE BID - FISH LADDER DETAILS (1)

DESIGNED	KP	
DRAWN	TEB	
CHECKED	KP	

WALLACE DAM FISHWAY
QUINNIPIAC RIVER

LOCATION
RIVER ROAD & QUINNIPIAC STREET
WALLINGFORD, CONNECTICUT

DATE	NOVEMBER 2010
SCALE	AS NOTED
PROJ. NO.	3019-01

SHEET
15 OF 25

Drawing H:\3019-01\DWG\CURRENT\WD-STR-DETAILS.DWG Layout Tab:14 BASE BID - FISH LADDER DETAILS (1)
Plotted by: BECKYM On this date Mon, 2010 November 1 - 2:21pm

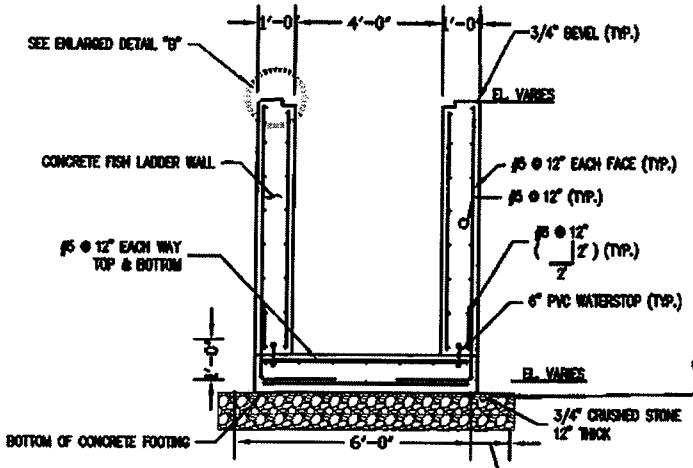

NOTES: 2" GRATING NOT SHOWN FOR CLARITY

TYPICAL FISH LADDER SECTION
SCALE: 1"=6'

NOTE: IMPERVIOUS CLAY BARRIER SHALL BE CONSTRUCTED AT A SPACING OF 20' O.C. MIN. OR AS DIRECTED BY THE ENGINEER IN THE FIELD. THE PURPOSE OF THE BARRIER IS TO IMPEDE TO FLOW OF GROUNDWATER WITHIN THE CRUSHED STONE BEDDING. BARRIER SHALL EXTEND ACROSS THE FULL WIDTH OF CRUSHED STONE BEDDING AND 2' ALONG THE LENGTH OF THE FISH LADDER.

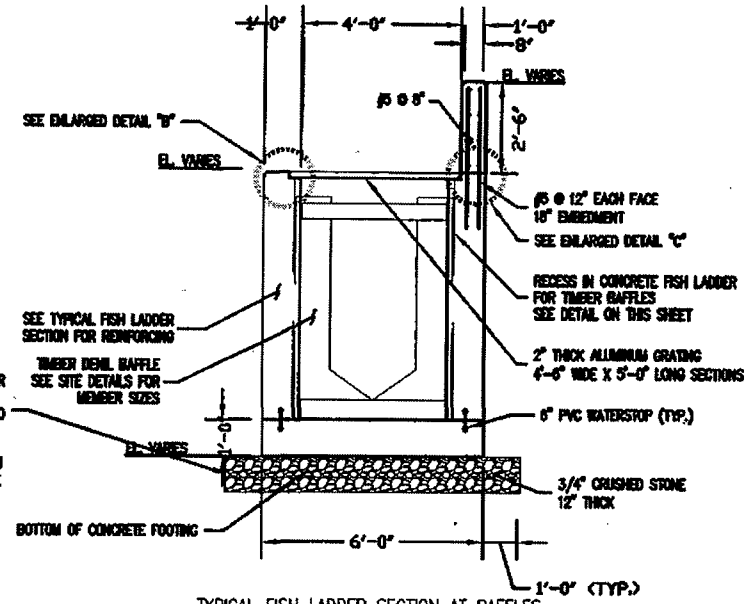

TYPICAL FISH LADDER SECTION AT BAFFLES
SCALE: 1"=6'

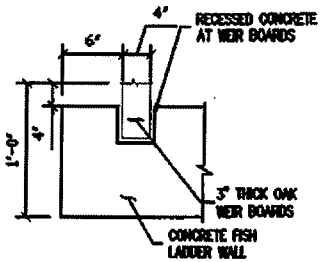

ENLARGED DETAIL "A"
SCALE: 1"=2'

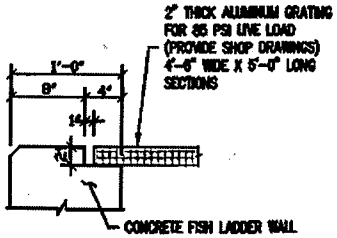

ENLARGED DETAIL "B"
SCALE: 1"=2'

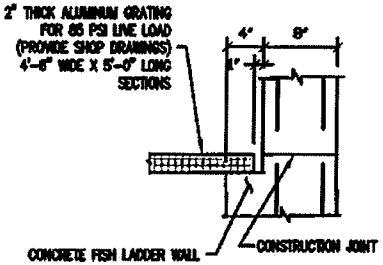

ENLARGED DETAIL "C"
SCALE: 1"=2'

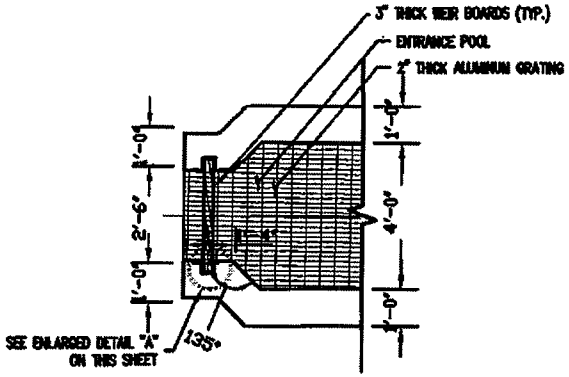

ENLARGED PLAN "D"
SCALE: 1"=5'

Engineering, Landscape Architecture and Environmental Science

MILONE & MACBROOM®

99 Realty Drive
Cheshire, Connecticut 06410
(203) 271-1773 Fax (203) 272-9733
www.miloneandmacbroom.com

BASE BID - FISH LADDER DETAILS (2)

DESIGNED	KP	
DRAWN	TEB	
CHECKED	KP	

WALLACE DAM FISHWAY
QUINNIPIAC RIVER

LOCATION
RIVER ROAD & QUINNIPIAC STREET
WALLINGFORD, CONNECTICUT

DATE	NOVEMBER 2010	SHEET
SCALE	AS NOTED	16 OF 25
PROJ. NO.	3019-01	

Drawing: H:\3019-01\DWG\CURRENT\WD-STR-DETAILS.DWG Layout Tab:15 BASE BID - FISH LADDER DETAILS (2)
Plotted by: BECKYK On this date: Mon, 2010 November 1 - 2:21pm

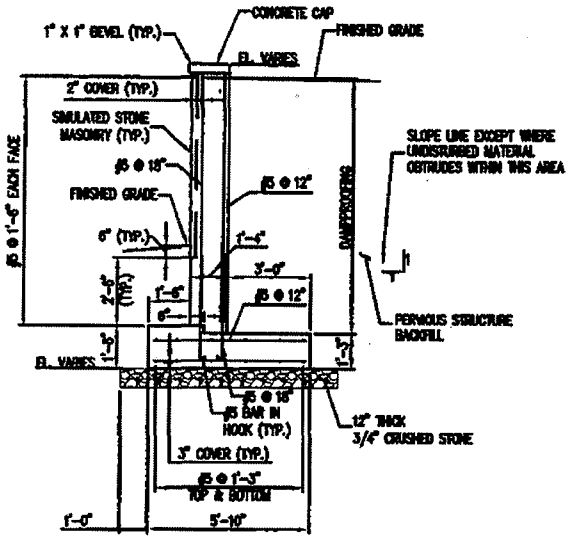

TYPICAL RETAINING WALL SECTION
SCALE: 1"=5'

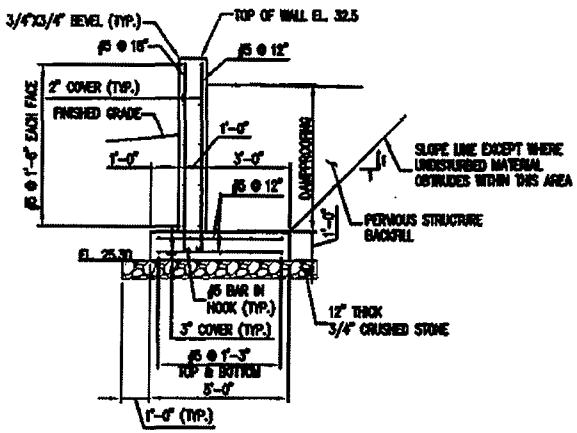

TYPICAL WINGWALL SECTION
SCALE: 1"=5'

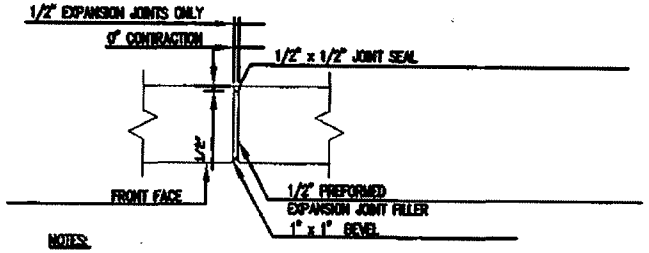

NOTES:
1. JOINT SEAL TO EXTEND FROM TOP OF FOOTING TO TOP OF WALL.
2. NO REINFORCEMENT SHALL PASS THROUGH EXPANSION OR CONTRACTION JOINT.
3. REINFORCEMENT SHALL PASS THROUGH CONSTRUCTION JOINTS.

CONTRACTION & EXPANSION JOINT DETAIL
N.T.S.

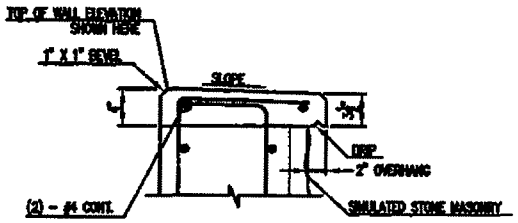

CONCRETE CAP DETAIL
1"=2"

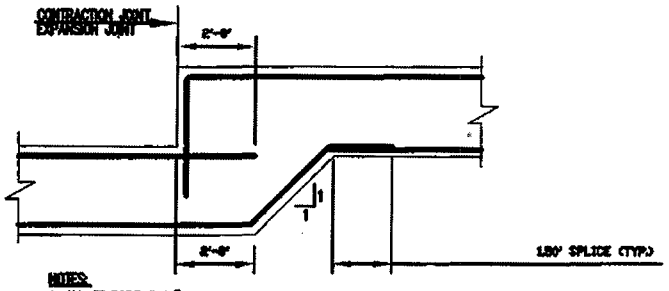

NOTES:
1. ALL #5 BARS @ 15"
2. FOR THE PURPOSE OF CLARITY ONLY LONGITUDINAL BARS ARE SHOWN

STEPPED FOOTING DETAIL
NOT TO SCALE

Engineering, Landscape Architecture and Environmental Science
MILONE & MACBROOM®
99 Realty Drive
Cheshire, Connecticut 06410
(203) 271-1773 Fax (203) 272-9733
www.miloneandmacbroom.com

BASE BID - RETAINING WALL & WINGWALL DETAILS (2)

LOCATION
RIVER ROAD & QUINNIPIAC STREET
WALLINGFORD, CONNECTICUT

DESIGNED	KP	WALLACE DAM FISHWAY QUINNIPIAC RIVER	DATE	NOVEMBER 2010
DRAWN	TEB		SCALE	AS NOTED
CHECKED	KP		PROJ. NO.	3019-01

SHEET
17 OF 25

Drawing: H:\3019-01\DWG\CURRENT\WO-STR-DETAILS.DWG Layout Tab:16 BASE BID - RETAINING WALL & WINGWALL DETAILS (2)
Plotted by: BECKYM On this date Mon, 2010 November 1 - 2:21pm

PLANT LIST

TREES	REV	QTY	KEY	BOTANICAL NAME	COMMON NAME	SIZE	COMMENTS
		–	Bp	Betula nigra	River Birch	8-10' HT.	B&B

SHRUBS/PERENNIALS	REV	QTY	KEY	BOTANICAL NAME	COMMON NAME	SIZE	COMMENTS
		–	AC	Amelanchier canadensis	Serviceberry	24"-30" HT.	CLUMP/FULL & DENSE
		–	AU	Aronia arbutifolia var. atropurpurea	Chokeberry	1 GAL.	FULL & DENSE
		3	CA	Clethra alnifolia	Summersweet	24"-30" HT.	FULL & DENSE
		–	CS	Cornus sericea	Silky Dogwood	24"-30" HT.	FULL & DENSE
		–	CS	Cornus sericea	Red Twigged Dogwood	24"-30" HT.	FULL & DENSE
		–	KL	Kalmia latifolia	Mountain Laurel	24"-30" HT.	FULL & DENSE
		–	M	Ilex verticillata	Winterberry	24"-30" HT.	FULL & DENSE
		–	SC	Sambucus canadensis	Common Elderberry	24"-30" HT.	FULL & DENSE
		–	V	Viburnum nudum	Maleberry	18"-24" HT.	FULL & DENSE

SEED MIX	REV	QTY	KEY	BOTANICAL NAME	COMMON NAME	SIZE	COMMENTS
				NEW ENGLAND EROSION CONTROL/RESTORATION MIX (FOR MOIST SITES)	N/A	N/A	N/A
				NEW ENGLAND CONSERVATION/WILDLIFE MIX	N/A	N/A	N/A

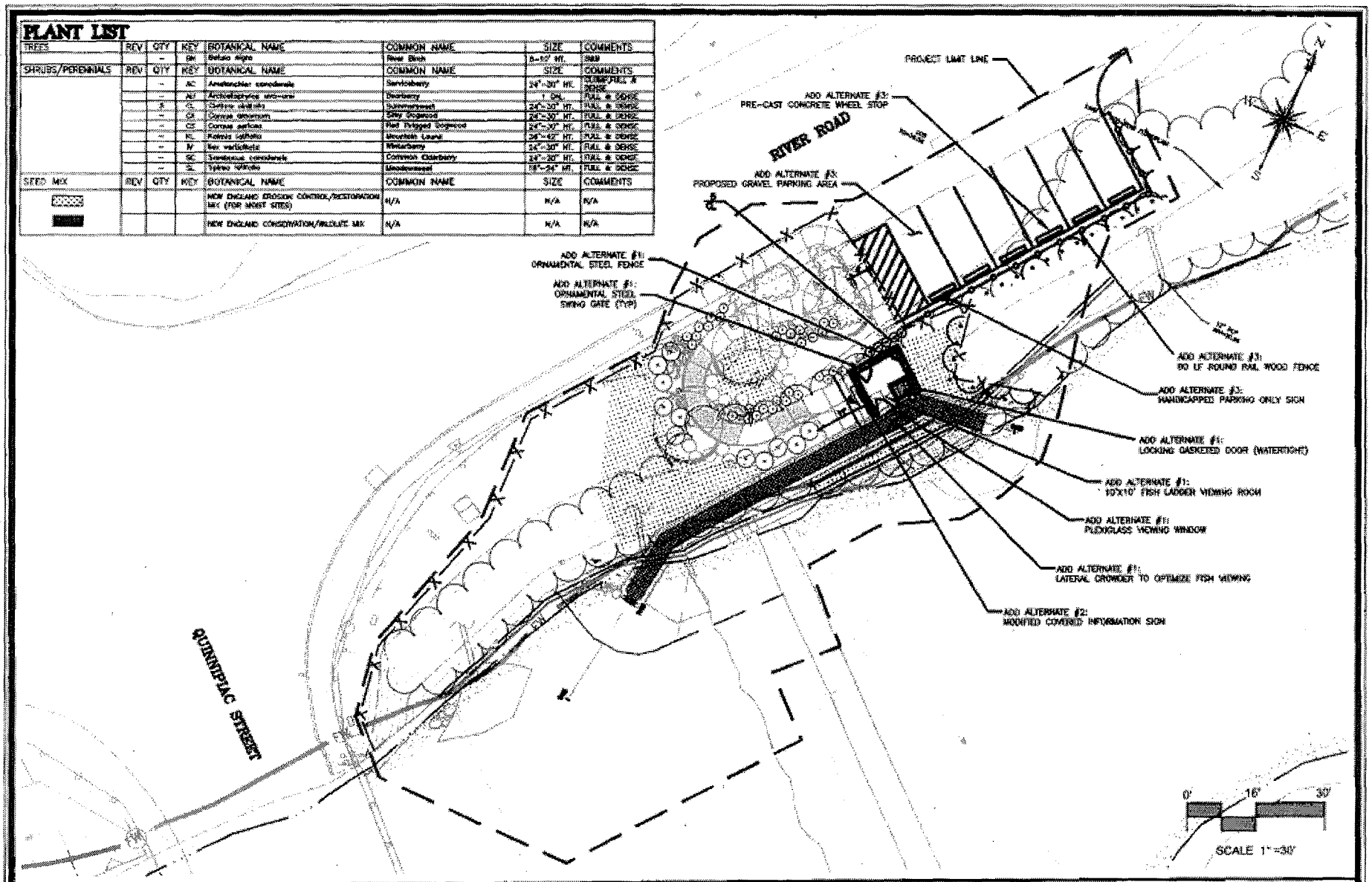

Engineering, Landscape Architecture and Environmental Science

MILONE & MACBROOM®

99 Realty Drive
Cheshire, Connecticut 06410
(203) 271-1773 Fax (203) 272-9733
www.miloneandmacbroom.com

ADD ALTERNATES - SITE PLAN - LAYOUT & LANDSCAPING

LOCATION
RIVER ROAD & QUINNIPIAC STREET
WALLINGFORD, CONNECTICUT

DESIGNED	EEL
DRAWN	BAM
CHECKED	JAG

WALLACE DAM FISHWAY
QUINNIPIAC RIVER

DATE	NOVEMBER 2010
SCALE	1"=30'
PROJ. NO.	3019-01

SHEET
18 OF 25

Drawing: N:\2019-01\DWG\LOADING\2-SHEET-ADD-ALTERNATES - SITE PLAN - LAYOUT & LANDSCAPING
Plotted By: BECKM On this date: Mon, 2010 November 1 - 2:21pm

REGULATORY ACTIVITIES TABLE (ADD ALTERNATES)	
AREA OF DISTURBANCE IN STATE/FEDERAL WETLAND AND WATERCOURSE	552 S.F.
AREA OF DISTURBANCE IN FLOODWAY/FLOODPLAIN	686 S.F.
NET FILL IN FLOODWAY/100 YEAR FLOODPLAIN	18.28 C.Y.
AREA OF DISTURBANCE IN SCEL	6,752 S.F.
NET CUT IN SCEL	132.73 C.Y.

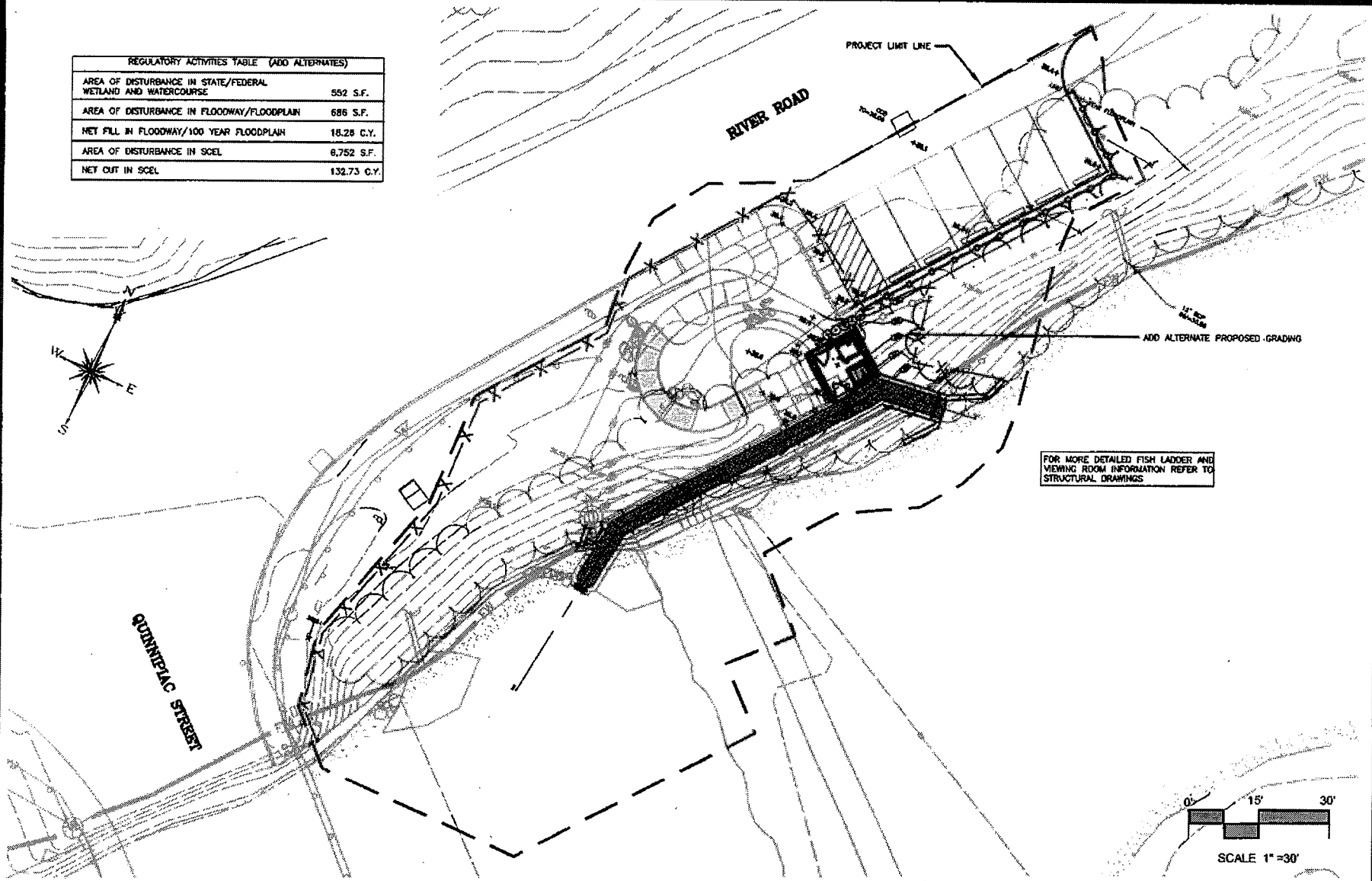

Engineering, Landscape Architecture and Environmental Science

MILONE & MACBROOM®

99 Realty Drive
Cheshire, Connecticut 06410
(203) 271-1773 Fax (203) 272-9733
www.miloneandmacbroom.com

ADD ALTERNATES - SITE PLAN - GRADING, UTILITIES & S&E CONTROL

DESIGNED	EEL
DRAWN	BAM
CHECKED	JAG

WALLACE DAM FISHWAY
QUINNIPIAC RIVER

LOCATION
RIVER ROAD & QUINNIPIAC STREET
WALLINGFORD, CONNECTICUT

DATE	NOVEMBER 2010
SCALE	1"=30'
PROJ. NO.	3019-01

SHEET
19 OF 25

Drawing: H:\3019-01\DWG\CURRENT\WD-AA-GRADING.DWG Layout Tab:18 ADD ALTERNATES - SITE PLAN - GRADING UTILITIES & S&E CONTROL
Plotted by: BECKYM On this date: Mon, 2010 November 1 - 3:01pm

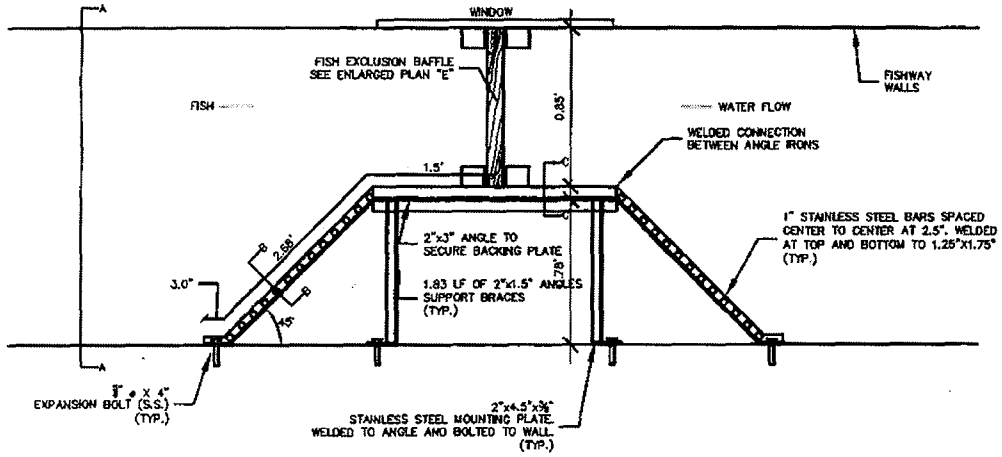

ADD ALTERNATE #1: LATERAL CROWDER PLAN
N.T.S.

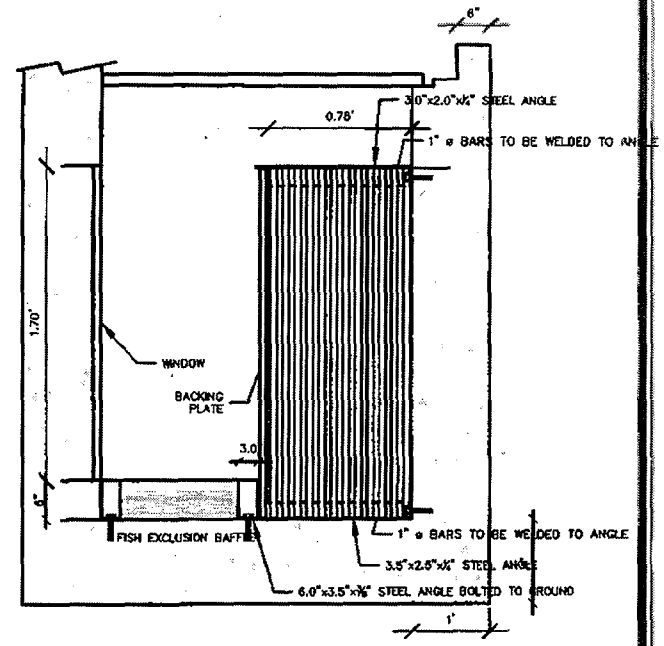

ADD ALTERNATE #1: LATERAL CROWDER VIEW A-A
LOOKING UPSTREAM

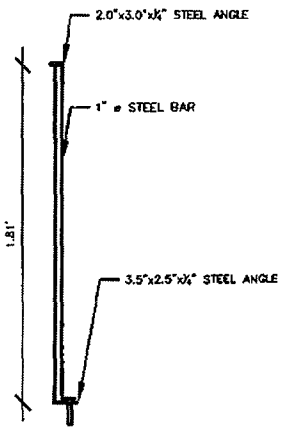

LATERAL CROWDER VIEW B-B
N.T.S.

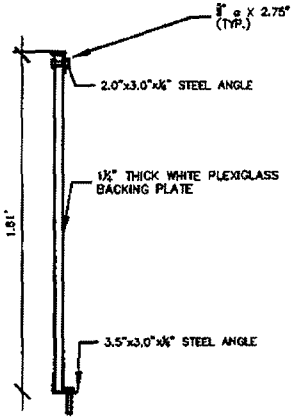

BACKING PLATE VIEW C-C
N.T.S.

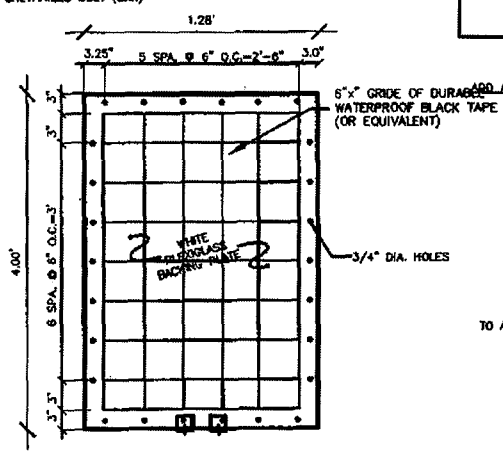

ADD ALTERNATE #1: LATERAL CROWDER BACKING PLATE
ENLARGED DETAIL
N.T.S.

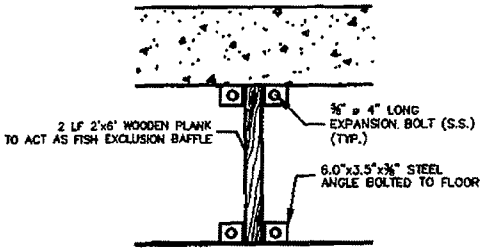

FISH EXCLUSION BAFFLE DETAIL
N.T.S.

Engineering, Landscape Architecture and Environmental Science
MILONE & MACBROOM®
99 Realty Drive
Cheshire, Connecticut 06410
(203) 271-1773 Fax (203) 272-9733
www.miloneandmacbroom.com

ADD ALTERNATE - SITE DETAILS (2)

DESIGNED	EEL
DRAWN	BAM
CHECKED	JAG

WALLACE DAM FISHWAY
QUINNIPIAC RIVER

LOCATION
RIVER ROAD & QUINNIPIAC STREET
WALLINGFORD, CONNECTICUT

DATE	NOVEMBER 2010
SCALE	AS NOTED
PROJ. NO.	3019-01

SHEET
20 OF 25

Drawing: M:\3019-01\DWG\CURRENT\WD-DETAILS.DWG Layout Tab:15 ADD ALTERNATE - SITE DETAILS (2)
Plotted by: BECKYM On this date: Mon, 2010 November 1 - 2:21pm

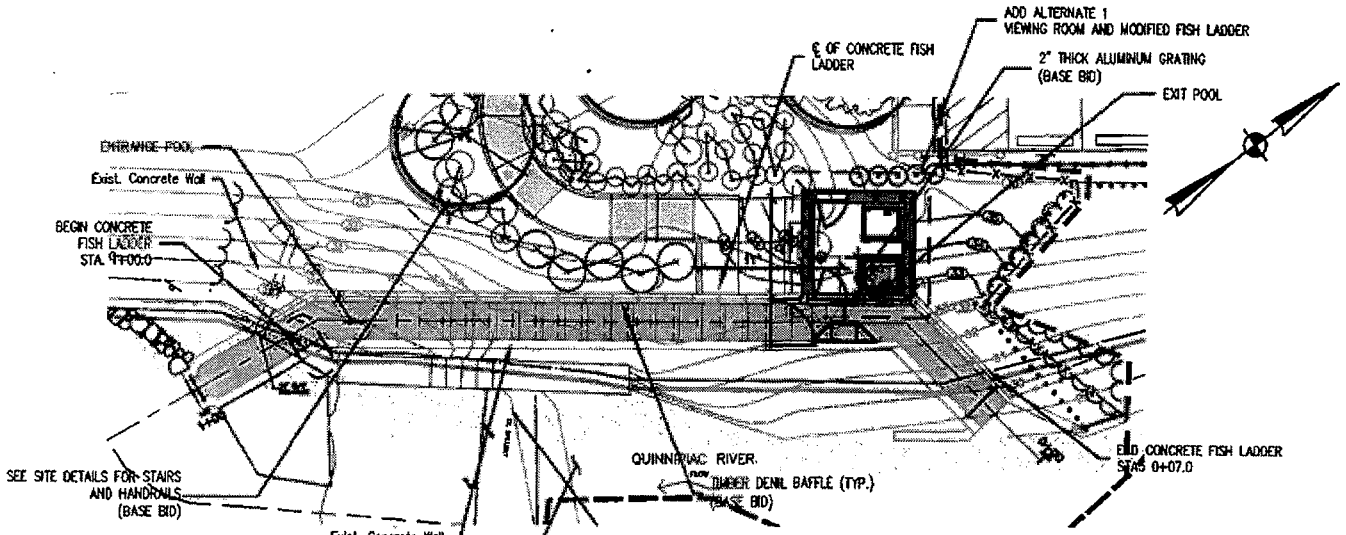

GENERAL PLAN
SCALE: 1"=20'

NOTES:

VIEWING ROOM SHALL BE FURNISHED WITH:

- 24" D X 60" L WORK COUNTER
- TWO 3' X 6' PINE SHELVES IN NORTHWEST CORNER, AGAINST NORTH WALL
- 4' X 8' SHEET OF HOMOSOTE OR EQUIVALENT TO SOUTH WALL NEAR CAMERA

CONTRACTOR SHALL COORDINATE WITH OWNER FOR FINAL LOCATION OF FURNISHINGS.

LEGEND

C.J. – CONTRACTION JOINT
E.J. – EXPANSION JOINT
T.W. – TOP OF WALL ELEVATION
– BORING LOCATION

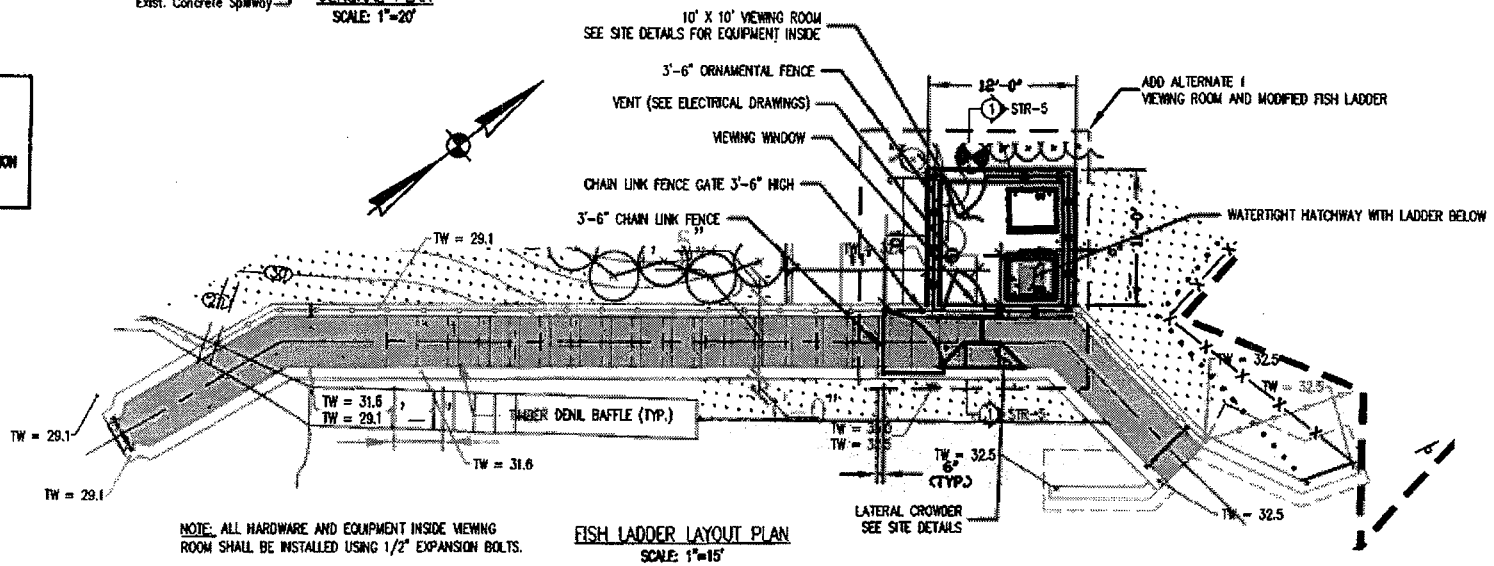

NOTE: ALL HARDWARE AND EQUIPMENT INSIDE VIEWING ROOM SHALL BE INSTALLED USING 1/2" EXPANSION BOLTS.

FISH LADDER LAYOUT PLAN
SCALE: 1"=15'

Engineering, Landscape Architecture and Environmental Science
MILONE & MACBROOM®
99 Realty Drive
Cheshire, Connecticut 06410
(203) 271-1773 Fax (203) 272-9733
www.miloneandmacbroom.com

ADD ALTERNATE - STRUCTURAL FISH LADDER DETAILS (1)

DESIGNED	KP	
DRAWN	TEB	
CHECKED	KP	

WALLACE DAM FISHWAY
QUINNIPIAC RIVER

LOCATION
RIVER ROAD & QUINNIPIAC STREET
WALLINGFORD, CONNECTICUT

DATE	NOVEMBER 2010	SHEET
SCALE	AS NOTED	21 OF 25
PROJ. NO.	3019-01	

Drawing: H:\3019-01\DWG\CURRENT\WD-AA-STR-DETAILS.DWG Layout Tab:2D ADD ALTERNATE - STRUCTURAL FISH LADDER DETAILS (1)
Plotted by: BECKYW On this date Mon, 2010 November 1 - 2:21pm

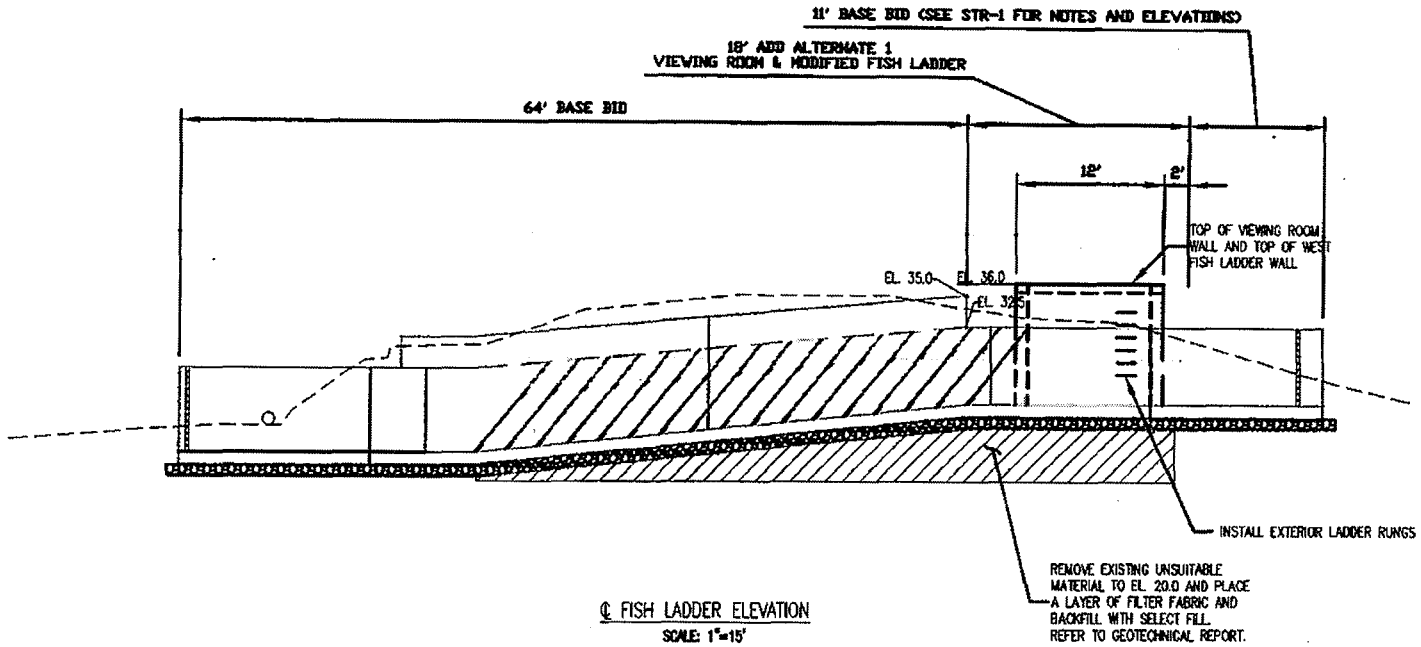

℄ FISH LADDER ELEVATION
SCALE: 1"=15'

NOTE: ORNAMENTAL FENCE AND GATE NOT SHOWN FOR CLARITY.

Engineering, Landscape Architecture and Environmental Science
MILONE & MACBROOM®
99 Realty Drive
Cheshire, Connecticut 06410
(203) 271-1773 Fax (203) 272-9733
www.miloneandmacbroom.com

ADD ALTERNATE - STRUCTURAL FISH LADDER DETAILS (2)

WALLACE DAM FISHWAY
QUINNIPIAC RIVER

DESIGNED	KP
DRAWN	TEB
CHECKED	KP

LOCATION
RIVER ROAD & QUINNIPIAC STREET
WALLINGFORD, CONNECTICUT

DATE	NOVEMBER 2010
SCALE	---
PROJ. NO.	3019-01

SHEET
22 OF 25

Drawing: H:\3019-01\DWG\CURRENT\WO-AA-STR-DETAILS.DWG Layout Tab:21 ADD ALTERNATE - STRUCTURAL FISH LADDER DETAILS (2)
Plotted by: BECKYW On this date: Mon, 2010 November 1 - 2:21pm

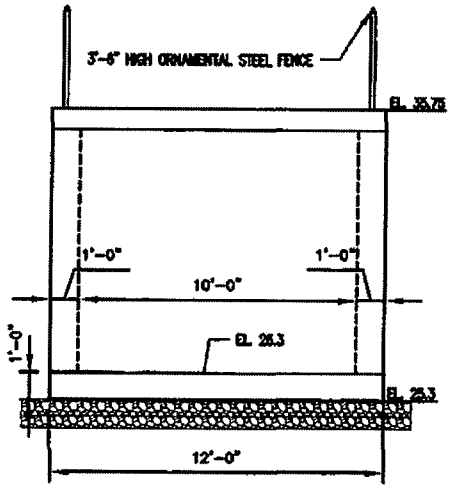

VIEWING ROOM – WEST ELEVATION
SCALE: 1"=8'

DECK COATING NOTES

THE CONCRETE DECK COATING SHALL BE A TWO COMPONENT PEDESTRIAN TRAFFIC SYSTEM. THE BASE COAT SHALL BE A ONE PART POLYURETHANE (MINIMUM 32 MILS) AND THE TOP COAT A ONE PART ALIPHATIC POLYURETHANE (MINIMUM 16 MILS). COLOR SHALL BE SELECTED BY THE OWNER.

APPLY COATING SYSTEM PER THE MANUFACTURER'S INSTRUCTIONS. DO NOT PLACE UNTIL THE CONCRETE HAS CURED A MINIMUM OF 28 DAYS. CURING COMPOUNDS SHALL BE COMPATIBLE WITH THE COATING SYSTEM.

PRIME ALL HORIZONTAL SURFACES.

BROADCAST SILICA SAND ONTO THE WET TOP COAT.

NOTE: DAMPPROOF WEST, SOUTH, AND NORTH SIDE OF VIEWING ROOM 6" BELOW FINISHED GRADE.

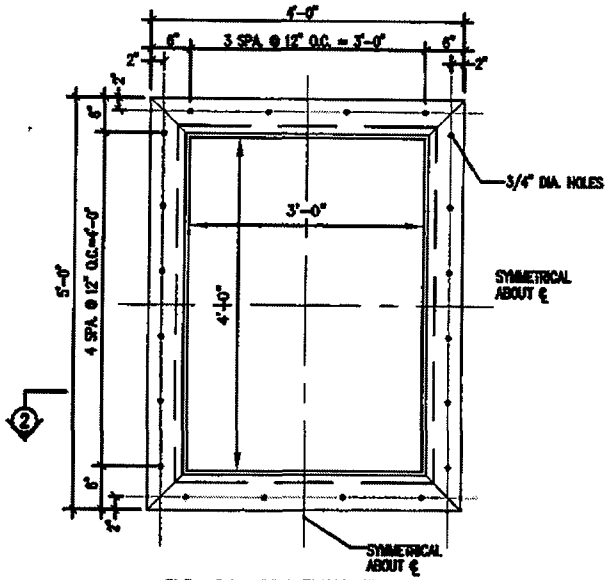

ELEVATION OF VIEWING WINDOW
NOT TO SCALE

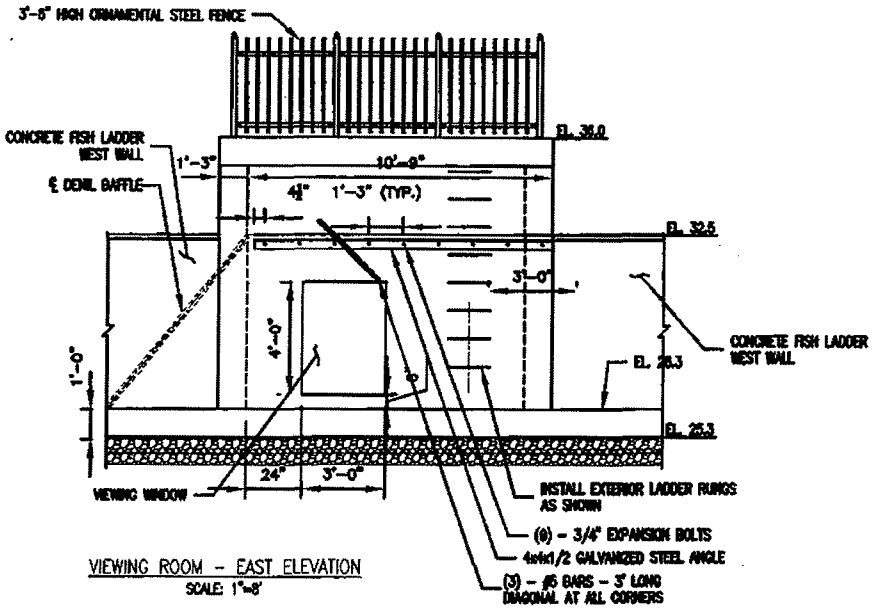

VIEWING ROOM – EAST ELEVATION
SCALE: 1"=8'

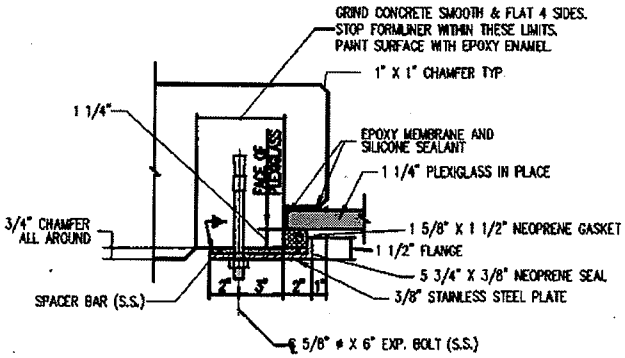

NOTE: GENERAL CONTRACTOR TO COORDINATE CONCRETE OPENING SIZE, JAMB AND SILL DETAILS WITH MANUFACTURER OF VIEWING WINDOW.

VIEWING WINDOW CONNECTION
NOT TO SCALE

Engineering, Landscape Architecture and Environmental Science
MILONE & MACBROOM®
99 Realty Drive
Cheshire, Connecticut 06410
(203) 271-1773 Fax (203) 272-9733
www.miloneandmacbroom.com

ADD ALTERNATE - VIEWING ROOM DETAILS (1)

DESIGNED	KP	
DRAWN	TEB	
CHECKED	KP	

WALLACE DAM FISHWAY
QUINNIPIAC RIVER

LOCATION
RIVER ROAD & QUINNIPIAC STREET
WALLINGFORD, CONNECTICUT

DATE	NOVEMBER 2010	SHEET
SCALE	---	23 OF 25
PROJ. NO.	3019-01	

Drawing: H:\3019-01\DWG\CURRENT\WD-AA-STR-DETAILS.DWG Layout Tab:22 ADD ALTERNATE - VIEWING ROOM DETAILS (1)
Plotted by: BECKYM On this date: Mon, 2010 November 1 - 2:21pm

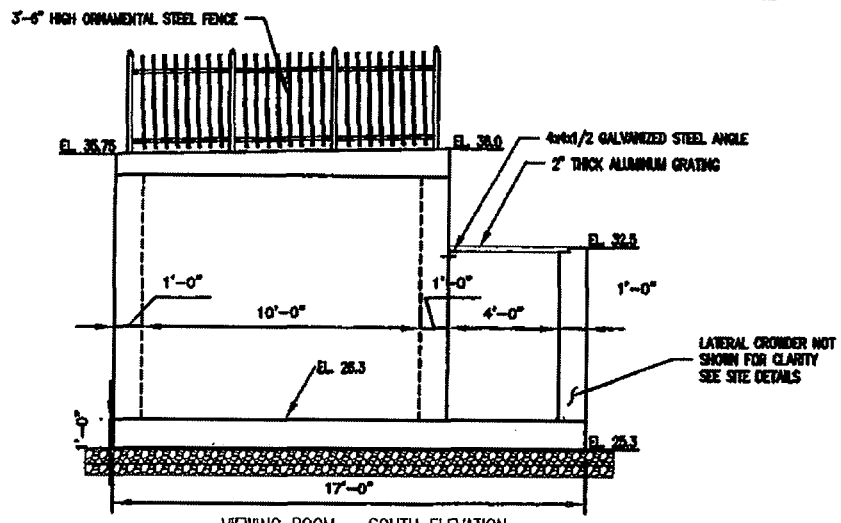

VIEWING ROOM – SOUTH ELEVATION
SCALE: 1"=8'

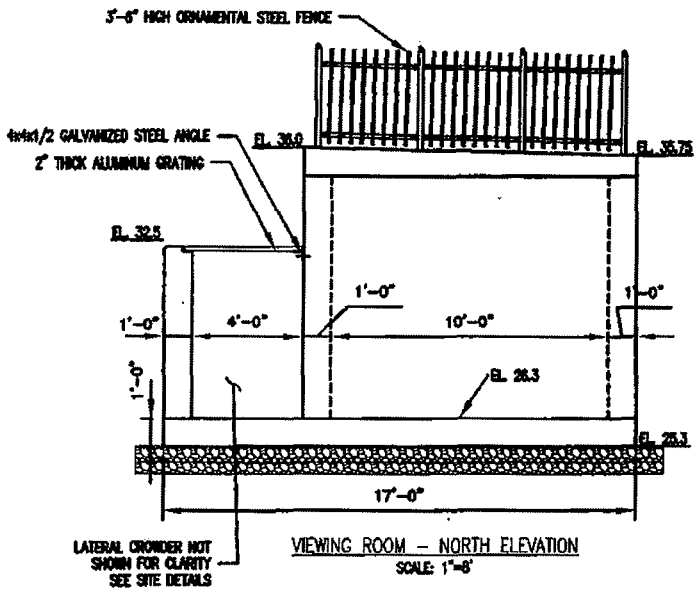

VIEWING ROOM – NORTH ELEVATION
SCALE: 1"=8'

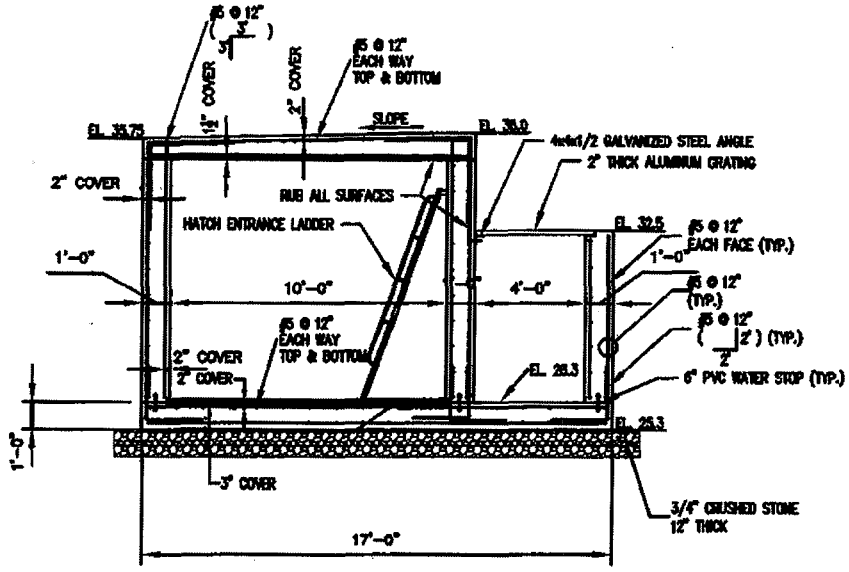

VIEWING ROOM – SECTION
SCALE: 1"=8'

Engineering, Landscape Architecture and Environmental Science
MILONE & MACBROOM®
99 Realty Drive
Cheshire, Connecticut 06410
(203) 271-1773 Fax (203) 272-9733
www.miloneandmacbroom.com

ADD ALTERNATE - VIEWING ROOM DETAILS (2)

DESIGNED	KP	
DRAWN	TEB	
CHECKED	KP	

WALLACE DAM FISHWAY
QUINNIPIAC RIVER

LOCATION
RIVER ROAD & QUINNIPIAC STREET
WALLINGFORD, CONNECTICUT

DATE	NOVEMBER 2010
SCALE	--
PROJ. NO.	3019-01

SHEET
24 OF 25

Drawing: H:\3019-01\DWG\CURRENT\WD-AA-STR-DETAILS.DWG Layout Tab:23 ADD ALTERNATE - VIEWING ROOM DETAILS (2)
Plotted by: BECKYM On this date Mon, 2010 November 1 - 2:21pm

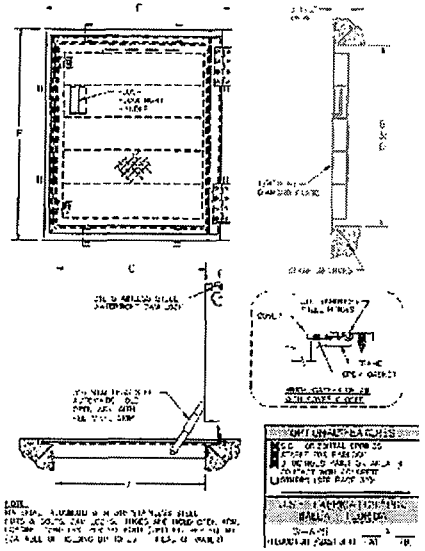

1560 P.S.F. LOADING****									
MODEL	COVER THK	W FRAME DIMENSION		CLEAR OPENING		OVERALL SIZE		WEIGHT	
	W in. (mm)	H in. (mm)	W in. (mm)	H in. (mm)	W in. (mm)	H in. (mm)	W in. (mm)	H in. (mm)	kg. (lb)
W-A-S	1/4 (6)	24 (610)	24 (610)	23 (584)	23 (584)	31 3/8 (797)	31 3/8 (797)	30 (66)	63 (30)
W-A-R	1/4 (6)	24 (610)	30 (762)	23 (584)	29 (737)	31 3/8 (797)	36 (914)	40 (88)	80 (36)
W-A-PS	1/4 (6)	24 (610)	36 (914)	23 (584)	35 (889)	31 3/8 (797)	42 (1067)	50 (110)	95 (43)
W-A-PR	1/4 (6)	30 (762)	30 (762)	29 (737)	29 (737)	37 3/8 (949)	36 (914)	55 (121)	110 (50)
W-A-PP	1/4 (6)	30 (762)	36 (914)	29 (737)	35 (889)	37 3/8 (949)	42 (1067)	65 (143)	135 (61)
W-A-PS	1/4 (6)	30 (762)	48 (1219)	29 (737)	47 (1194)	37 3/8 (949)	54 (1372)	70 (154)	170 (77)
W-A-PR	1/4 (6)	36 (914)	36 (914)	35 (889)	35 (889)	43 3/8 (1102)	42 (1067)	75 (165)	150 (68)
W-A-PS	1/4 (6)	36 (914)	48 (1219)	35 (889)	47 (1194)	43 3/8 (1102)	54 (1372)	85 (187)	185 (84)

NOTES:
1. USE SPECIFIED DOOR OR EQUIVALENT.
2. CONTRACTOR SHALL SUBMIT SHOP DRAWINGS TO ENGINEER FOR APPROVAL PRIOR TO CONSTRUCTION.
3. CONTRACTOR TO COORDINATE CONCRETE OPENING WITH MANUFACTURER.

WATERTIGHT (FLOODTIGHT)/GASTIGHT ANGLE FRAME, PEDESTRIAN LOADING, SINGLE DOOR
MODEL W-APS by U.S.F. FABRICATION INC.
NOT TO SCALE

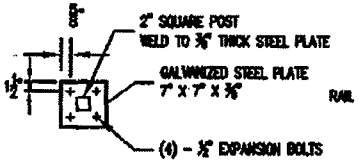

PLAN
NOT TO SCALE

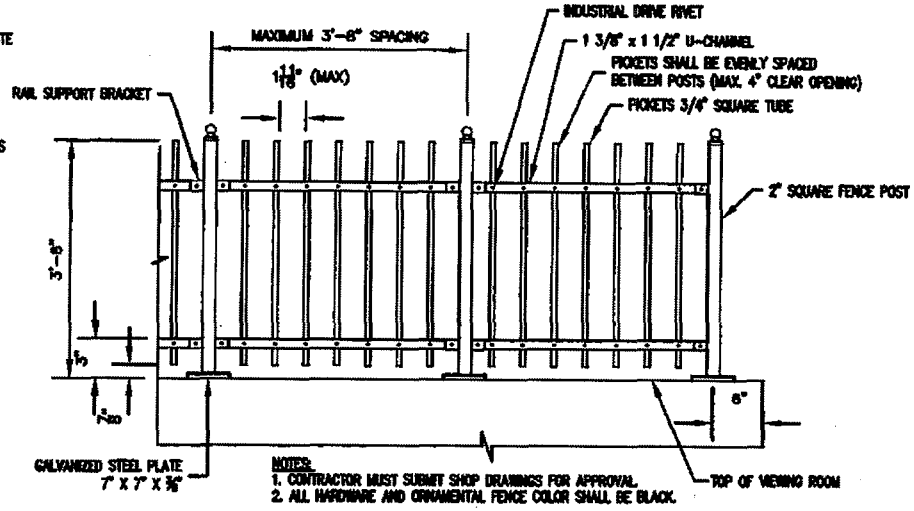

NOTES:
1. CONTRACTOR MUST SUBMIT SHOP DRAWINGS FOR APPROVAL.
2. ALL HARDWARE AND ORNAMENTAL FENCE COLOR SHALL BE BLACK.

ORNAMENTAL FENCE DETAIL
NOT TO SCALE

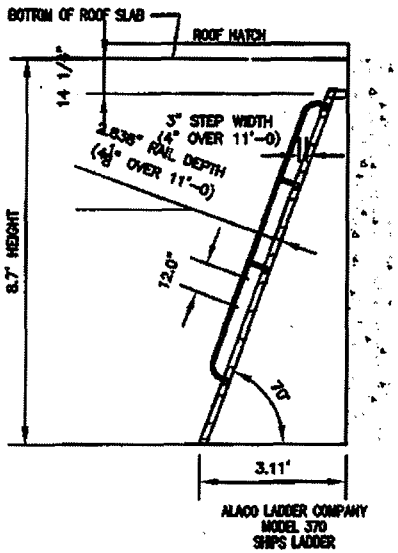

ALACO LADDER COMPANY
MODEL 370
SHIPS LADDER

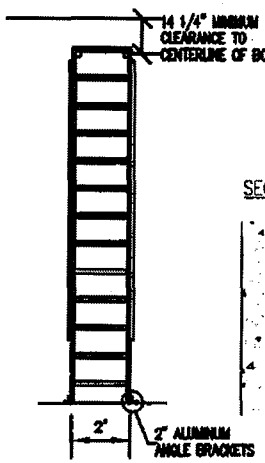

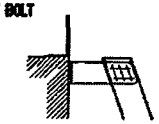

SECTION AT BRACKET

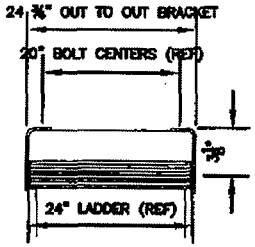

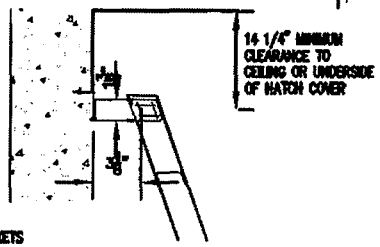

MODEL 370 BRACKET
MAT'L: 3/8" ALUM 6061-T6

NOTES:
1. PROVIDE SHOP DRAWINGS FOR APPROVAL.
2. FASTEN LADDER WITH 1/2" EXPANSION BOLTS.

HATCH ENTRANCE LADDER OR APPROVED EQUAL
N.T.S.

Engineering, Landscape Architecture and Environmental Science
MILONE & MACBROOM®
99 Realty Drive
Cheshire, Connecticut 06410
(203) 271-1773 Fax (203) 272-9733
www.miloneandmacbroom.com

ADD ALTERNATE - VIEWING ROOM DETAILS (3)

DESIGNED	KP
DRAWN	TEB
CHECKED	KP

WALLACE DAM FISHWAY
QUINNIPIAC RIVER

LOCATION
RIVER ROAD & QUINNIPIAC STREET
WALLINGFORD, CONNECTICUT

DATE	NOVEMBER 2010
SCALE	--
PROJ. NO.	3019-01

SHEET
25 OF 25

Drawing: H:\3019-01\DWG\CURRENT\WO-AA-STR-DETAILS.DWG Layout Tab:24 ADD ALTERNATE - VIEWING ROOM DETAILS (3)
Plotted by: BECKY4 On this date: Mon, 2010 November 1 - 2:21pm