PUBLIC NOTICE

US Army Corps of Engineers ®
New England District
696 Virginia Road
Concord, MA 01742-2751

Comment Period Begins: August 17, 2010
Comment Period Ends: September 17, 2010
File Number: NAE-2008-846
In Reply Refer To: Susan K. Lee
Phone: (978) 318-8494
E-mail: susan.k.lee@usace.army.mil

The District Engineer has received a permit application from the applicant below to **conduct work in waters of the United States** as described below.

APPLICANT Connecticut Department of Transportation (CTDOT), 2800 Berlin Turnpike, PO BOX 317546, Newington, Connecticut 06131-7546

ACTIVITY Discharge dredged and/or fill materials below the high tide line in the West River, and in inland and tidal wetlands in association with the reconstruction of Interstate 95 over the West River in New Haven and West Haven, Connecticut (State Project 92-522). The reconstruction project extends from approximately 200m east of the I-95 Bridge over MetroNorth railroad in West Haven to approximately 250m east of Howard Avenue in New Haven, and includes replacement of the I-95 Bridge crossing over the West River, and reconstruction of interchanges 44 and 45. The proposed work will permanently impact 0.04 acre of inland wetlands, 0.03 acre of vegetated tidal wetlands, 0.022 acre of intertidal flats, and 0.043 acre of river/harbor bottom (excavation/backfill occurring within cofferdams/marine enclosures). A detailed description and plans of the activity are attached.

WATERWAY AND LOCATION OF THE PROPOSED WORK
This work is proposed in the West River and adjacent wetlands in New Haven and West Haven, Connecticut. The project begins at 72° 56' 32.387" W 41° 17' 0.932" N and extends east to 72° 55' 39.515" W 41° 17' 6.627" N on the USGS New Haven, CT (#95) quadrangle sheet.

AUTHORITY
Permits are required pursuant to:
__X__Section 10 of the Rivers and Harbors Act of 1899
__X__Section 404 of the Clean Water Act
_____Section 103 of the Marine Protection, Research and Sanctuaries Act).

The decision whether to issue a permit will be based on an evaluation of the probable impact of the proposed activity on the public interest. That decision will reflect the national concern for both protection and utilization of important resources. The benefit which may reasonably accrue from the proposal must be balanced against its reasonably foreseeable detriments. All factors which may be relevant to the proposal will be considered, including the cumulative effects thereof; among those are: conservation, economics, aesthetics, general environmental concerns, wetlands, cultural value, fish and wildlife values, flood hazards, flood plain value, land use, navigation, shoreline erosion and accretion, recreation, water supply and conservation, water quality, energy needs, safety, food production and, in general, the needs and welfare of the people.

The Corps of Engineers is soliciting comments from the public; Federal, state, and local agencies and officials; Indian Tribes; and other interested parties in order to consider and evaluate the impacts of this proposed activity. Any comments received will be considered by the Corps of Engineers to determine whether to issue, modify, condition or deny a permit for this proposal. To make this decision, comments are used to assess impacts on endangered species, historic properties, water quality, general environmental effects, and the other public interest factors listed above. Comments are used in the preparation of an Environmental Assessment and/or an Environmental Impact Statement pursuant to the National Environmental Policy Act. Comments are also used to determine the need for a public hearing and to determine the overall public interest of the proposed activity.

Where the activity involves the discharge of dredged or fill material into waters of the United States or the transportation of dredged material for the purpose of disposing it in ocean waters, the evaluation of the impact of the activity in the public interest will also include application of the guidelines promulgated by the Administrator, U.S Environmental Protection Agency, under authority of Section 404(b) of the Clean Water Act, and/or Section 103 of the Marine Protection Research and Sanctuaries Act of 1972 as amended.

ESSENTIAL FISH HABITAT

The Magnuson-Stevens Fishery Conservation and Management Act, as amended by the Sustainable Fisheries Act of 1996 (Public Law 104-267), requires all federal agencies to consult with the National Marine Fisheries Service on all actions, or proposed actions, permitted, funded, or undertaken by the agency, that may adversely affect Essential Fish Habitat (EFH).

This project will impact (temporary and permanent impacts) approximately 1.2 acres of Essential Fish Habitat (EFH) for those species listed on the attached 'Summary of Essential Fish habitat (EFH) Designation (2 sheets). This habitat in the project areas consists of tidal wetlands and intertidal flats on the east and west shorelines of the West River, and West River bottom. The substrate of the West River bottom is sand, or sand and gravel fill overlying organic silt overlying sand or silty sand (historic boring information). The application information provided indicates that the river bottom supports a relatively healthy and diverse population of fauna, likely to include hydroids, barnacles, tube-dwelling polychaetes, tube-dwelling amphipods, and bivalves, among other groups. Inner New Haven Harbour, which forms the southern limit of the project area at the West River crossing, supports a finfish assemblage that consists of year-round resident species, anadromous species, and summer and winter migrants. The shallow estuarine areas provide nursery area for species that spawn locally, and support populations of growing post-larval and juvenile fish by providing food and refuge. In terms of actual fish species that use the river, CT DEP reports that alewife and blueback herring are the primary fish species that are known and./or have the potential to use the river. Loss of this habitat may adversely affect these species as a result of pier removal and construction, construction of temporary structures to facilitate bridge replacement and demolition of structures. However, the District Engineer has made a preliminary determination that the site-specific adverse effect will not be substantial. Further consultation with the National Marine Fisheries Service regarding EFH conservation recommendations is being conducted and will be concluded prior to the final decision. Mitigation is proposed (see below).

SECTION 106 COORDINATION

Based on his initial review, the District Engineer has determined that little likelihood exists for the proposed work to impinge upon properties with cultural or Native American significance, or listed in, or eligible for listing in, the National Register of Historic Places. Therefore, no further consideration of the requirements of

Section 106 of the National Historic Preservation Act of 1966, as amended, is necessary. This determination is based upon one or more of the following:

a. The permit area has been extensively modified by previous work.
b. The permit area has been recently created.
c. The proposed activity is of limited nature and scope.
d. Review of the latest published version of the National Register shows that no presence of registered properties listed as being eligible for inclusion therein are in the permit area or general vicinity.
e. Coordination with the State Historic Preservation Officer and/or Tribal Historic Preservation Officer(s)

ENDANGERED SPECIES CONSULTATION

The New England District, Army Corps of Engineers has reviewed the list of species protected under the Endangered Species Act of 1973, as amended, which might occur at the project site. It is our preliminary determination that the proposed activity for which authorization is being sought is designed, situated or will be operated/used in such a manner that it is not likely to adversely affect any Federally listed endangered or threatened species or their designated critical habitat. By this Public Notice, we are requesting that the appropriate Federal Agency concur with our determination.

The States of Connecticut, Maine, Massachusetts, New Hampshire and Rhode Island have approved **Coastal Zone Management Programs**. Where applicable the applicant states that any proposed activity will comply with and will be conducted in a manner that is consistent with the approved Coastal Zone Management Program. By this Public Notice, we are requesting the State concurrence or objection to the applicant's consistency statement.

The following authorizations have been applied for, or have been, or will be obtained:

(X) Permit, License or Assent from State.
( ) Permit from Local Wetland Agency or Conservation Commission.
(X) Water Quality Certification in accordance with Section 401 of the Clean Water Act.

In order to properly evaluate the proposal, we are seeking public comment. Anyone wishing to comment is encouraged to do so. **Comments should be submitted in writing by the above date.** If you have any questions, please contact Susan Lee at (978) 318-8494, (800) 343-4789 or (800) 362-4367, if calling from within Massachusetts.

Any person may request, in writing, within the comment period specified in this notice, that a public hearing be held to consider the application. Requests for a public hearing shall specifically state the reasons for holding a public hearing. The Corps holds public hearings for the purpose of obtaining public comments when that is the best means for understanding a wide variety of concerns from a diverse segment of the public.

The initial determinations made herein will be reviewed in light of facts submitted in response to this notice. All comments will be considered a matter of public record. Copies of letters of objection will be forwarded to the applicant who will normally be requested to contact objectors directly in an effort to reach an understanding.

In accordance with 33 CFR 325.2(a)(8), we publish monthly a list of permits issued or denied during the previous month at www.nae.usace.army.mil/reg, under the heading "Monthly General and Individual Permit Authorizations." Relevant environmental documents and the SOFs or RODs are available upon written request

and, where applicable, upon the payment of administrative fees. Also visit www.nae.usace.army.mil for more information on the New England District Corps of Engineers programs.

THIS NOTICE IS NOT AN AUTHORIZATION TO DO ANY WORK.

Diane M. Ray

Diane M. Ray
Acting Chief, Permits and Enforcement Branch
Regulatory Division

If you would prefer not to continue receiving Public Notices, please contact Ms. Tina Chaisson at (978) 318-8058 or e-mail her at bettina.m.chaisson@usace.army.mil. You may also check here ( ) and return this portion of the Public Notice to: Bettina Chaisson, Regulatory Division, U.S. Army Corps of Engineers, 696 Virginia Road, Concord, MA 01742-2751.

NAME: _____
ADDRESS: _____

PROPOSED WORK AND PURPOSE

The proposed reconstruction of I-95 over the West River and associated I-95 reconstruction requires the discharge of dredged and/or fill material in tidal and inland wetlands, and work in navigable waters. The purpose of the project is bridge/roadway maintenance. The project will provide a safe I-95 crossing of the West River for the next 20 years, will relieve congestion on the mainline of I-95, and improve traffic operations on the Interchange 44 and 45 ramps.

Project components are as follows:

- Replace Bridge No. 00163A (I-95 over West River in New Haven and West Haven, CT); the existing 348m long, 28m wide, 12 span structure will be replaced with a 6-span bridge over the West River; the replacement bridge will be widened to 43.2 to accommodate a 1.8m median, a 4.8m inside shoulder and three 3.6m lanes in each direction, a 3.6m outside shoulder in the northbound direction and a 4.2m acceleration lane and 2.4m shoulder in the southbound direction.
- Demolish Bridge No. 00163B (I-95 SB exit ramp to Kimberly Avenue)
- Replace Bridge No. 00164 (I-95 over Ella T. Grasso Boulevard); the existing 37.8m long, 36.5m wide three span bridge will be replaced with a 31m long, 40.2m wide single span bridge.
- Reconstruct 1420m of Interstate 95 from the I-95 Bridge over MetroNorth railroad to the west of the West River, to east of the Howard Avenue structure over I-95, in association with the bridge replacement work.
- Reconstruct Interchanges 44 and 45, which provide access to and from I-95 from Kimberly Avenue and Ella T. Grasso Boulevard, to eliminate redundant movements and poor weaving conditions. These two interchanges will be replaced with a combined diamond interchange with the on and off ramps terminating on Ella T. Grasso Boulevard; Ella T. Grasso Boulevard will be extended to intersect with Kimberly Avenue to provide access to the south into West Haven.

Project construction will require fill/work in regulated areas as follows:

Tidal Wetland Impacts

Unavoidable temporary and permanent tidal wetland impacts will be required due to demolition of the existing bridge piers, construction of new piers, removal of the Kimberly Avenue exit ramp, drainage upgrades and temporary trestles to access the work areas.

Vegetated tidal wetlands will be permanently impacted by the replacement of a drainage outfall and placement of new bridge piers for a total of 109.3 SM (0.03 acre). Temporary impacts will occur due to the removal of three drainage outfalls, the installation of one drainage outfall, the removal of an existing loop ramp and the installation of a temporary trestle to access the work areas for a total of 1660.1 SM ((0.41 acre) of impact. Within the overall project, 1516 SM (0.37 acre) of tidal wetland area will be restored.

Intertidal flats will be permanently impacted by the installation of new bridge piers for a total of 87.22 SM (0.022 acre). The demolition of piers for the existing bridge, the removal of piers for the Kimberly Avenue Loop ramp and the temporary trestle will result in temporary impacts to intertidal flats. The removal of an existing drainage outlet will also result in minor impacts to intertidal flats. The total temporary impact to intertidal flats areas for these activities is 431.98 m^2 (0.107 acre). The proposed bridge replacement will result in 373.18 m^2 (0.09) restoration of intertidal flats, primarily from the removal of existing bridge piers.

River/Inner Harbour Bottom Impacts
Impacts below the High Tide Line (HTL) resulting from proposed bridge piers will permanently displace 175 m^2 (1883.6 ft^2) of river/harbour bottom. Temporary impacts of the trestles and cofferdams will result in 2217.3 m^2 (23,866.9 ft^2). Approximately 281.7 m^2 (0.07 acre) of river bottom will be restored due to the removal of existing bridge piers. Existing bridge piers will be removed to a depth no less than 1 meter below the river bottom and backfilled with a substrate material that is consistent with the parent material in the vicinity of the site.

Inland Wetlands Impact
The impacts to Inland Wetlands will occur due to replacement of drainage system outfalls along Interstate 95. Work at four sites will consist of pulling the outfalls away from regulated areas. Permanent impacts to federally regulated inland wetlands areas is approximately 170.5 m^2 (0.04 acre); temporary impacts are approximately 31 m^2 (0.007 acre0.

The project work is described and shown on the enclosed plans entitled "RECONSTRUCTION OF I-95 OVER WEST RIVER NEW HAVEN-WEST HAVEN" on fifty (50) sheets (FIG. NO. 1 to FIG. NO. 50), sheets dated various dates (5/07, 6/08, 1/09). Regulated impacts are shown on the attached Table (SUMMARY OF IMPACTS).

MITIGATION
Impacts on regulated resources have been avoided and minimized to the extent practicable. Compensatory mitigation is proposed to mitigate the anticipated loss of and temporary impact on tidal wetlands associated with the project. The mitigation plan will restore 5174 SM (1.28 acre) of tidal wetland consisting of both upper and lower marsh along the south side of the proposed I-95 over West River Bridge between the existing Compost Access Road and the West River. The proposed mitigation is described and shown on attached plans entitled "RECONSTRUCTION OF I-95 OVER WEST RIVER NEW HAVEN-WEST HAVEN, on six (6) sheets (FIG. 1E, 2E, 3E, 4E, 1G, 2G), all sheets dated "1/09".

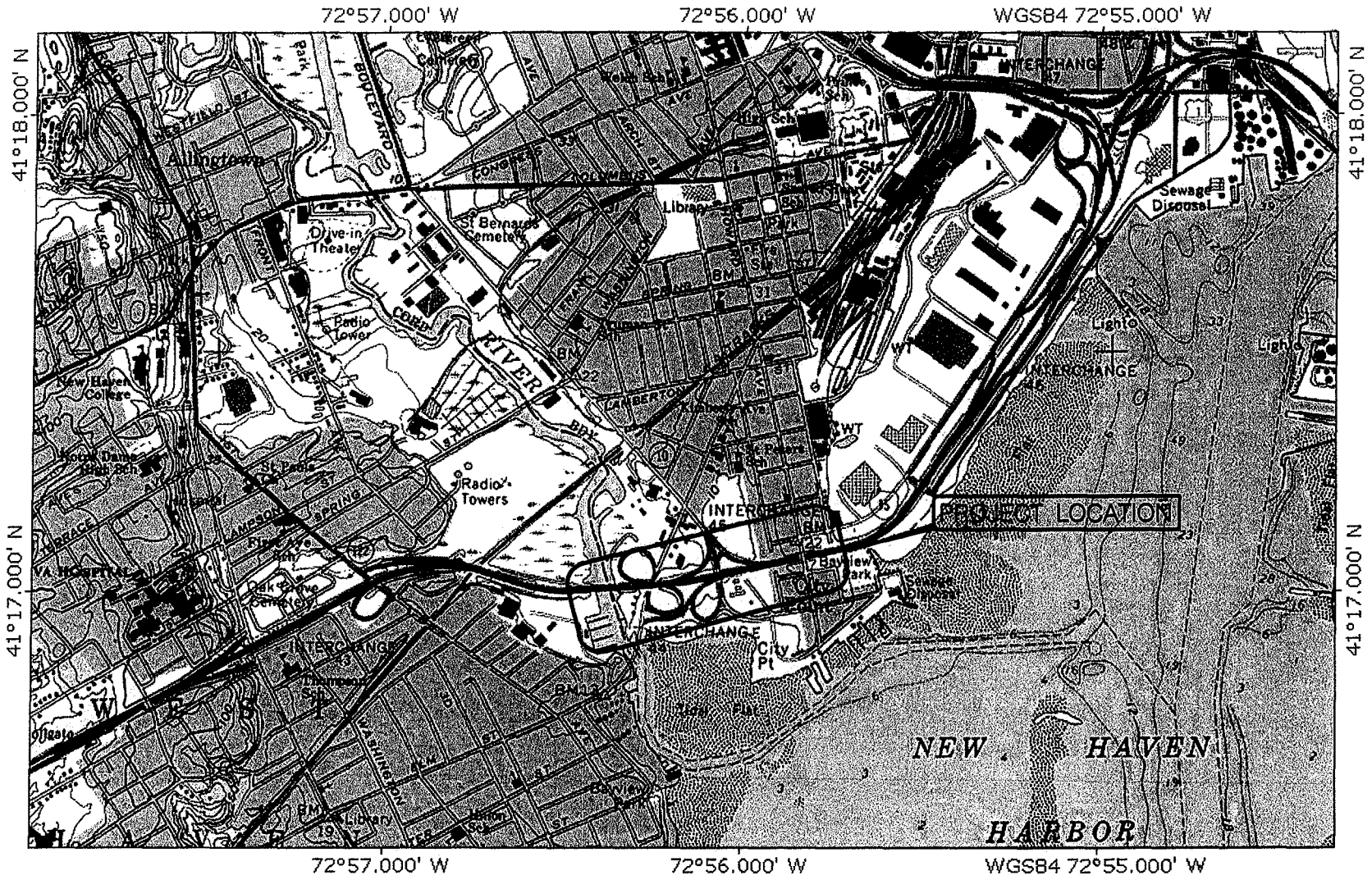

CONNECTICUT COORDINATE GRID

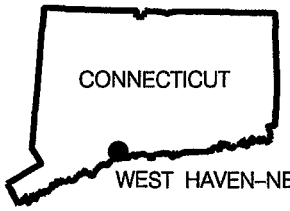

REFERENCE: NEW HAVEN QUADRANGLE MAP #95, 1985

SCALE IN FEET

0 1000 2000 3000 4000 5000

SCALE 1:24000

STATE OF CONNECTICUT - DEPARTMENT OF TRANSPORTATION		
STATE PROJECT NO. 92-522		
RECONSTRUCTION OF I-95 OVER WEST RIVER NEW HAVEN-WEST HAVEN		
FIG. NO. 1	VICINITY MAP	1/09

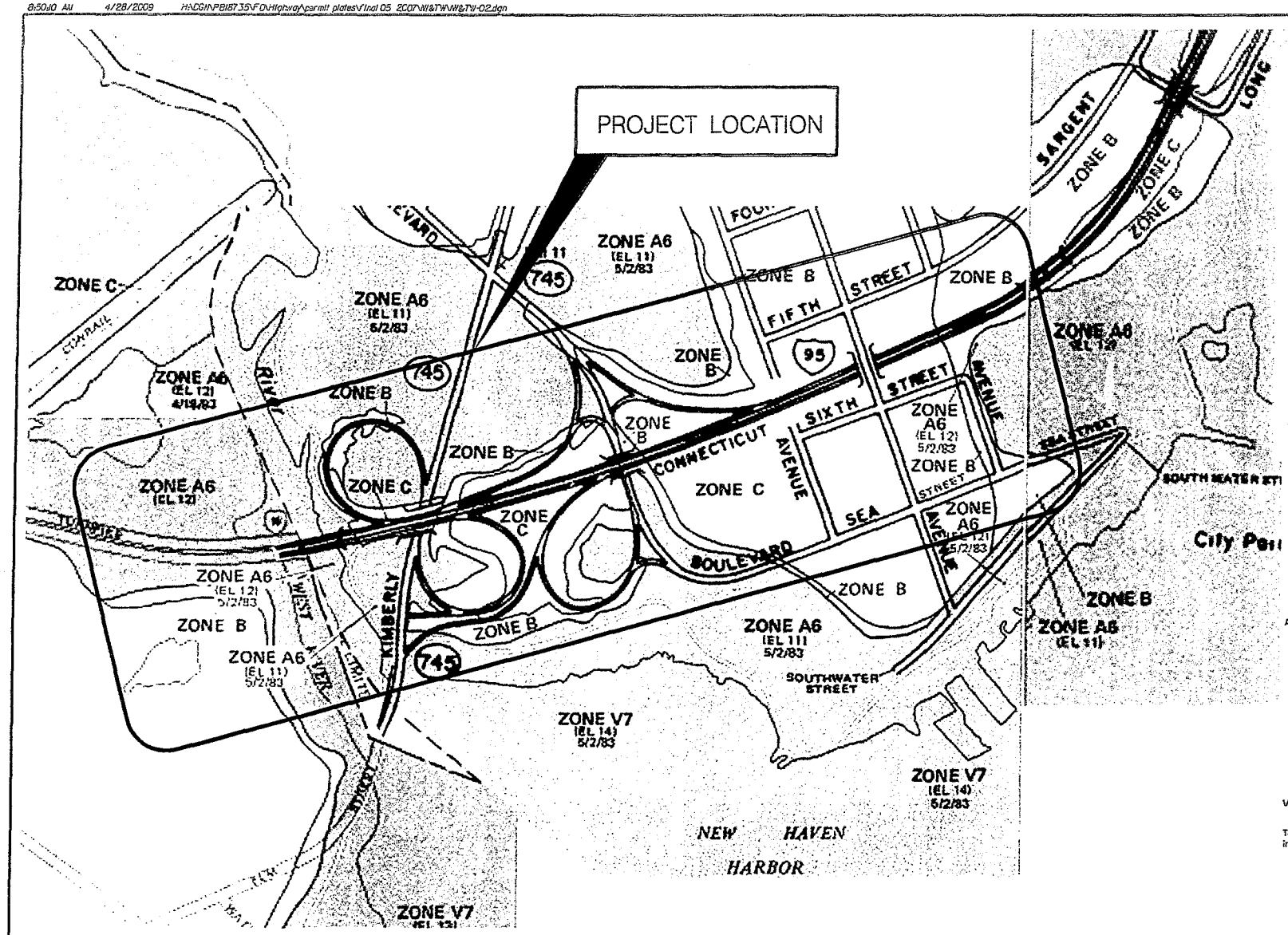

KEY TO MAP

500-Year Flood Boundary	ZONE B
100-Year Flood Boundary	ZONE A1
Zone Designations*	ZONE A5
100-Year Flood Boundary	ZONE B
500-Year Flood Boundary	ZONE B
Base Flood Elevation Line With Elevation In Feet**	513
Base Flood Elevation in Feet Where Uniform Within Zone**	(EL 987)
Elevation Reference Mark	RM7×
Zone D Boundary	
River Mile	•M1.5

UNDEVELOPED COASTAL BARRIERS†

Identified 1983 | Identified 1990 | Otherwise Protected Areas

†Coastal barrier areas are normally located within or adjacent to special flood hazard areas.

**Referenced to the National Geodetic Vertical Datum of 1929

*EXPLANATION OF ZONE DESIGNATIONS

ZONE	EXPLANATION
A	Areas of 100-year flood; base flood elevations and flood hazard factors not determined.
AO	Areas of 100-year shallow flooding where depths are between one (1) and three (3) feet; average depths of inundation are shown, but no flood hazard factors are determined.
AH	Areas of 100-year shallow flooding where depths are between one (1) and three (3) feet; base flood elevations are shown, but no flood hazard factors are determined.
A1-A30	Areas of 100-year flood; base flood elevations and flood hazard factors determined.
A99	Areas of 100-year flood to be protected by flood protection system under construction; base flood elevations and flood hazard factors not determined.
B	Areas between limits of the 100-year flood and 500-year flood; or certain areas subject to 100-year flooding with average depths less than one (1) foot or where the contributing drainage area is less than one square mile; or areas protected by levees from the base flood. (Medium shading)
C	Areas of minimal flooding. (No shading)
D	Areas of undetermined, but possible, flood hazards.
V	Areas of 100-year coastal flood with velocity (wave action); base flood elevations and flood hazard factors not determined.
V1-V30	Areas of 100-year coastal flood with velocity (wave action); base flood elevations and flood hazard factors determined.

To determine if flood insurance is available in this community, contact your insurance agent, or call the National Flood Insurance Program, at (800) 638-6620.

STATE OF CONNECTICUT - DEPARTMENT OF TRANSPORTATION

STATE PROJECT NO. 92-522

RECONSTRUCTION OF I-95 OVER WEST RIVER
NEW HAVEN-WEST HAVEN

FIG. NO.		
2	FEMA FLOODPLAIN MAP	6/08

AREA OF IMPACT TO FLOODPLAIN	
	AREA ft² (m²) [acres]
MAIN LINE	7,136 (663) [0.1638]
ELLA GRASSO BOULEVARD	118,177 (10,979) [2.71]
RAMP A	11,711 (1,088) [0.2688]
RAMP B	1,862 (173) [0.0427]
RAMP C	6,770 (629) [0.1554]
RAMP D	12,120 (1,126) [0.2782]
KIMBERLY AVENUE	51,301 (4,766) [1.177]
SEA STREET	31,398 (2,917) [0.7208]
COMMUTER PARKING LOT	44,154 (4,102) [1.0136]
IW-1	108 (10) [0.0025]
IW-2	64 (6) [0.0015]
IW-3	54 (5) [0.0012]
IW-4	129 (12) [0.0030]
IW-5	1,334 (124) [0.0306]
TW-1	915 (85) [0.0210]
TW-2	338 (31.4) [0.0078]
TW-3	6878 (638) [0.1577]
TW-4	490 (45.5) [0.0112]
TW-5	1,356 (126) [0.0311]
TW-6	1,281 (119) [0.0294]
TOTAL	299,536 (27,828) [6.88]

VOLUME OF CUT / FILL IN FLOODPLAIN		
	CUT yd³ (m³)	FILL yd³ (m³)
MAIN LINE	650 (497)	556 (425)
ELLA GRASSO BOULEVARD	6,950 (5,314)	5,381 (4,114)
RAMP A	233 (178)	837 (640)
RAMP B	65 (50)	60 (46)
RAMP C	8 (6)	324 (248)
RAMP D	196 (150)	1,295 (990)
KIMBERLY AVENUE	1,985 (1,518)	2,365 (1,808)
SEA STREET	1,159 (886)	1,316 (1,006)
COMMUTER PARKING LOT	386 (295)	970 (742)
IW-1	21 (16)	16 (12)
IW-2	1.8 (1.4)	1.8 (1.4)
IW-3	2.4 (1.8)	2.4 (1.8)
IW-4	123 (94)	7 (5)
IW-5	0	188 (144)
TW-1	34.7 (26.6)	0 (0)
TW-2	61.4 (46.9)	61.4 (46.9)
TW-3	410.2 (313.6)	505.6 (386.5)
TW-4	9.5 (7.2)	0 (0)
TW-5	2,190.5 (1,674.7)	2,190.5 (1,674.7)
TW-6	4,737.3 (3,621.9)	4,737.3 (3,621.9)
TOTAL	19,223.8 (14,698.1)	20,814.0 (15,913.2)
	NET CHANGE =	1590.2 (1215.1) FILL

STATE OF CONNECTICUT - DEPARTMENT OF TRANSPORTATION

STATE PROJECT NO. 92-522

RECONSTRUCTION OF I-95 OVER WEST RIVER
NEW HAVEN-WEST HAVEN

FIG. NO.	SUMMARY OF 100 YEAR FLOODPLAIN IMPACTS	6/08
3		

3:45:27 PM 5/5/2009 h:\CGN\PB\87.35\FD\Highway\permit plates\Final 05_2007\NW&TWNH&TW-04.dgn

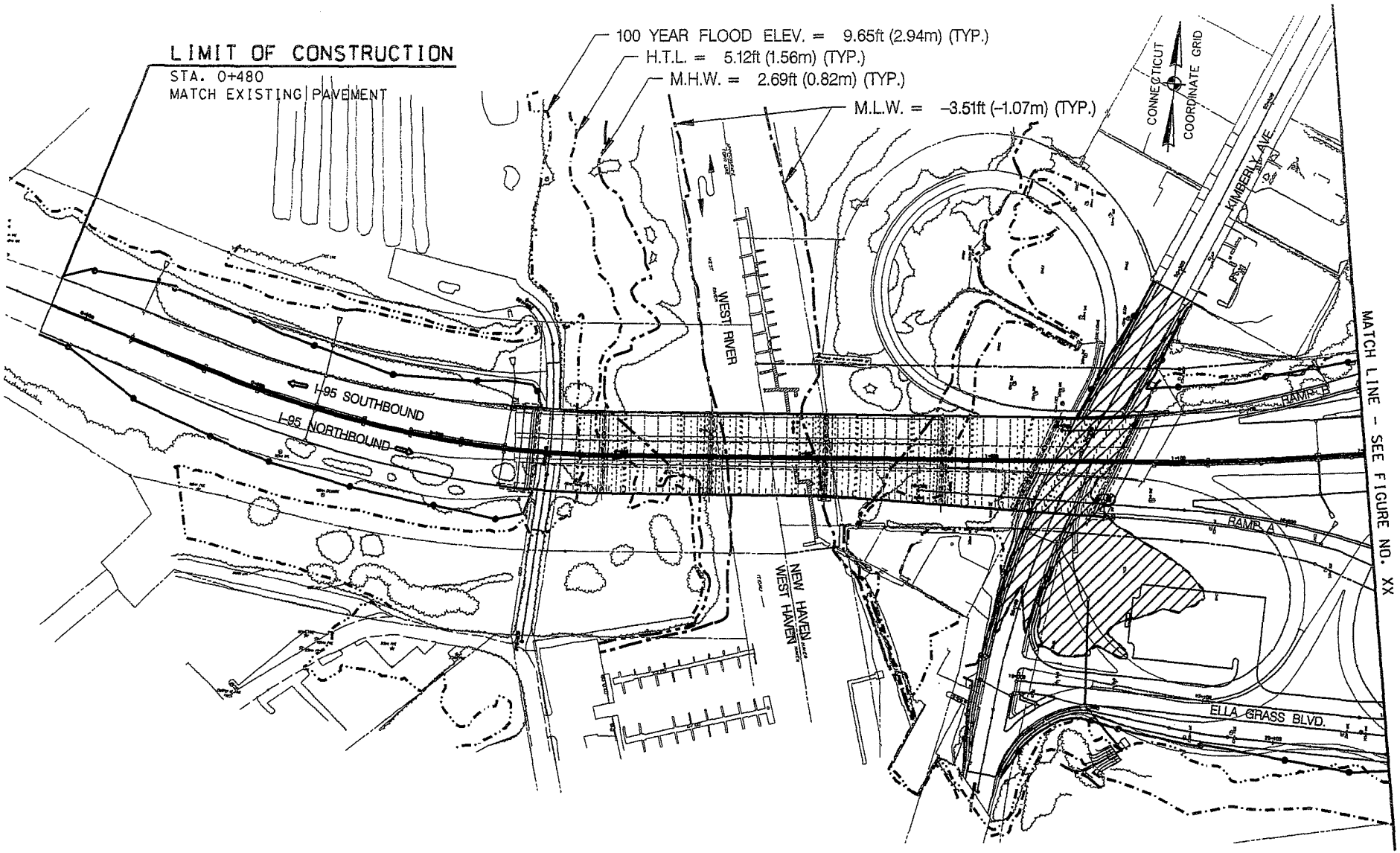

AREA OF IMPACT WITHIN 100-YR FLOODPLAIN

SCALE IN METERS

0 30 60 90 120 150

SCALE 1:3000

STATE OF CONNECTICUT - DEPARTMENT OF TRANSPORTATION		
STATE PROJECT NO. 92-522		
RECONSTRUCTION OF I-95 OVER WEST RIVER NEW HAVEN-WEST HAVEN		
FIG. NO. 4	FLOODPLAIN IMPACT AREA MAP	5/07

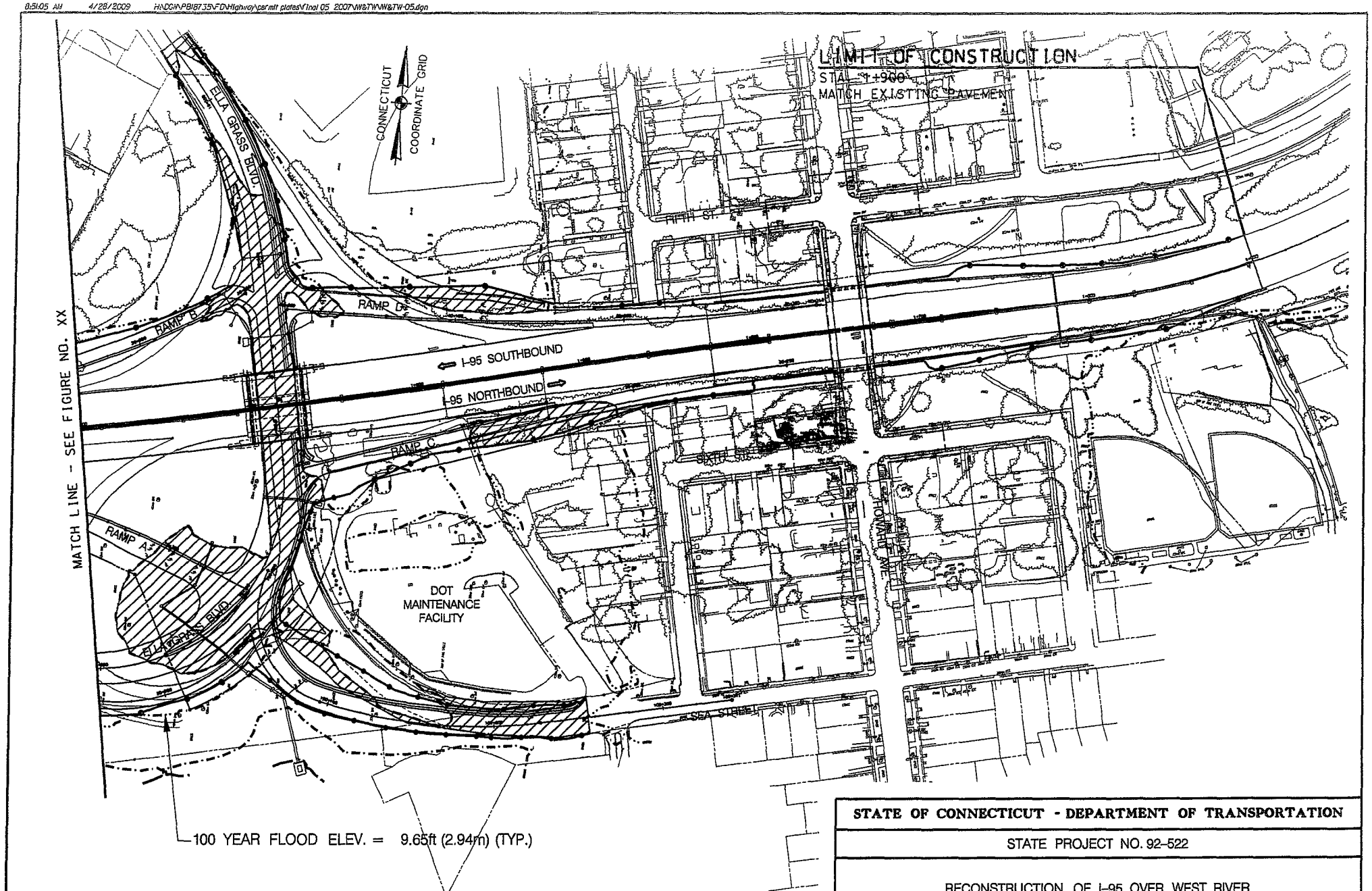

STATE OF CONNECTICUT - DEPARTMENT OF TRANSPORTATION		
STATE PROJECT NO. 92-522		
RECONSTRUCTION OF I-95 OVER WEST RIVER NEW HAVEN-WEST HAVEN		
FIG. NO. 5	FLOODPLAIN IMPACT AREA MAP	6/08

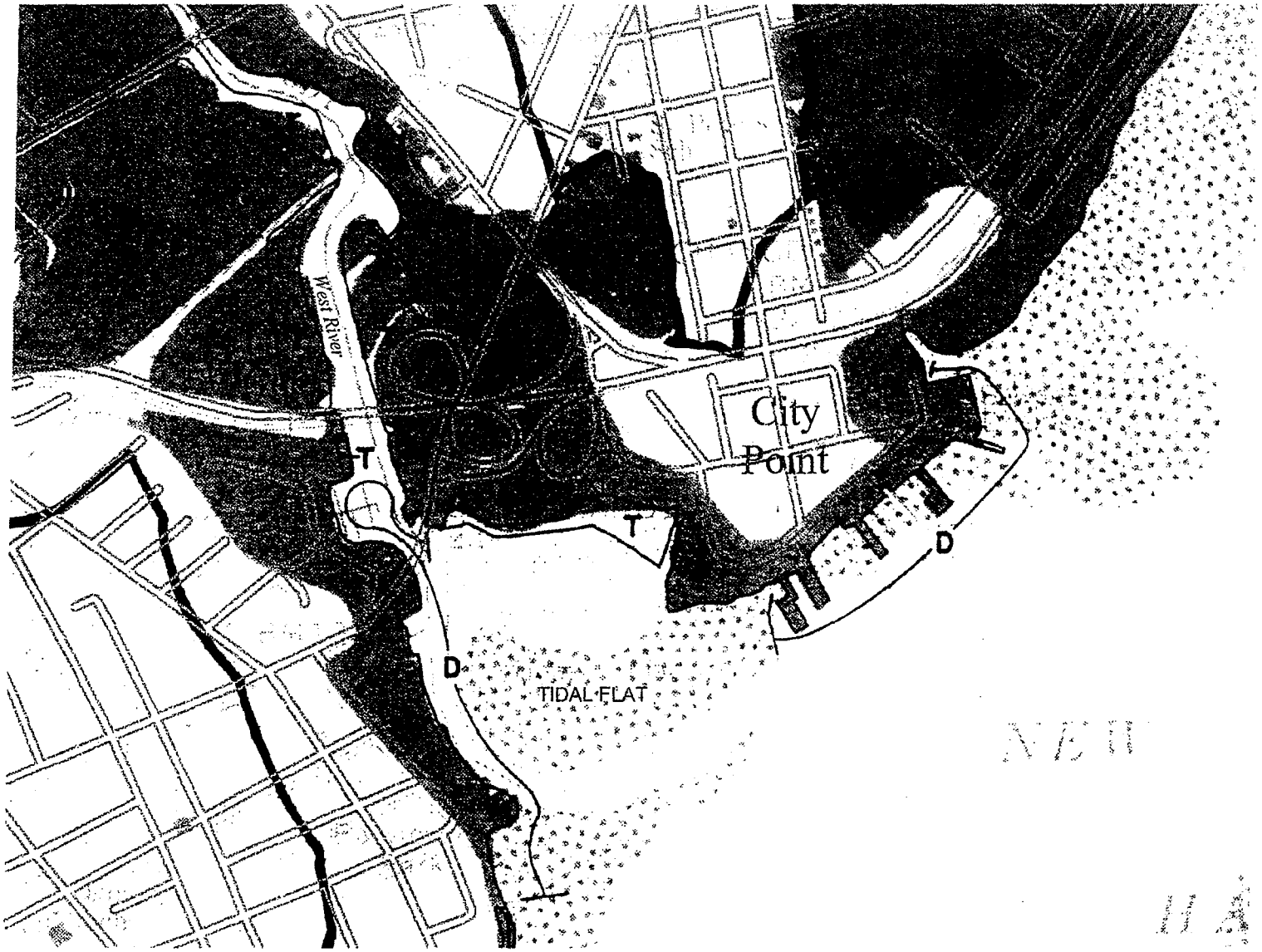

STATE OF CONNECTICUT - DEPARTMENT OF TRANSPORTATION		
STATE PROJECT NO. 92-522		
RECONSTRUCTION OF I-95 OVER WEST RIVER NEW HAVEN–WEST HAVEN		
FIG. NO. 6	COASTAL RESOURCES MAP (CTDEP 1979)	6/08

3:43:57 PM 5/5/2009 h:\DGN\P8187.35\FD\Highway\permit plates\final 05 2007\IW&TW\IW&TW-07.dgn

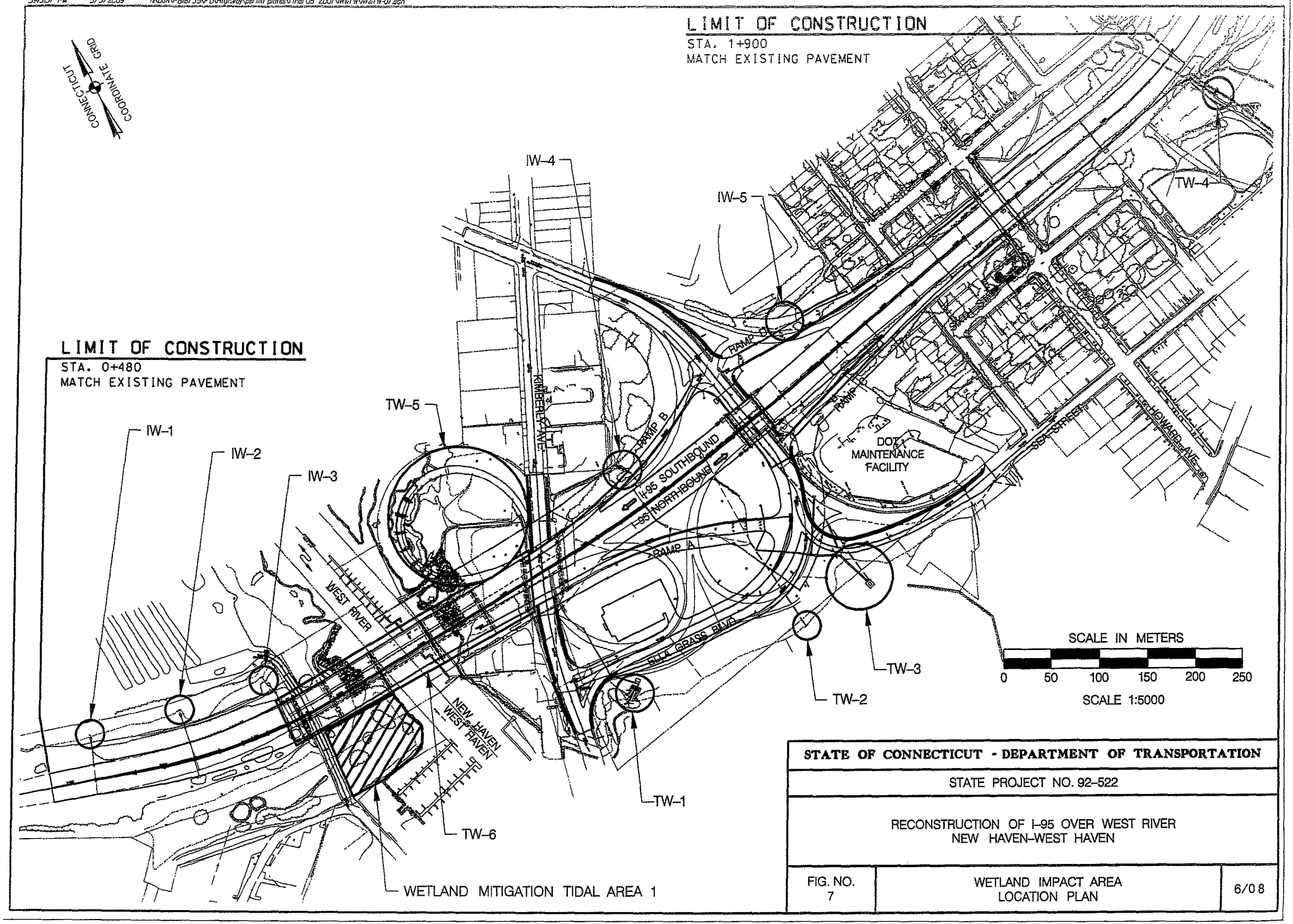

STATE OF CONNECTICUT - DEPARTMENT OF TRANSPORTATION		
STATE PROJECT NO. 92-522		
RECONSTRUCTION OF I-95 OVER WEST RIVER NEW HAVEN-WEST HAVEN		
FIG. NO. 7	WETLAND IMPACT AREA LOCATION PLAN	6/08

8:52:07 AM 4/28/2009 H:\C3\NPB18735\FD\Highway\permit plates\Final 05 2007\W&TW\W&TW-08.dgn

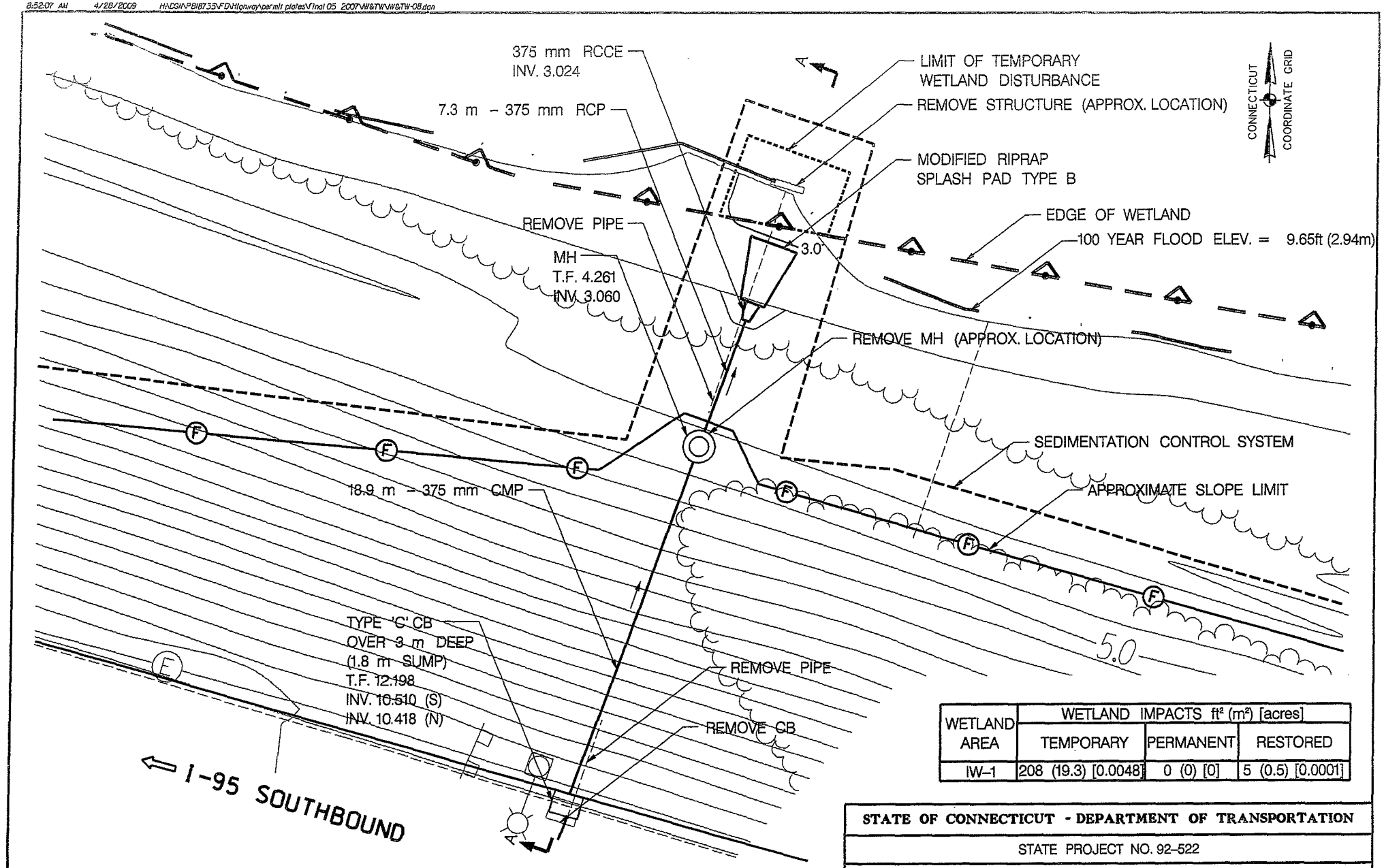

WETLAND AREA	WETLAND IMPACTS ft² (m²) [acres]		
	TEMPORARY	PERMANENT	RESTORED
IW–1	208 (19.3) [0.0048]	0 (0) [0]	5 (0.5) [0.0001]

FOR INFORMATION ONLY

SCALE IN METERS

0 2.5 5 7.5 10 12.5

SCALE 1:250

STATE OF CONNECTICUT - DEPARTMENT OF TRANSPORTATION

STATE PROJECT NO. 92–522

RECONSTRUCTION OF I–95 OVER WEST RIVER
NEW HAVEN–WEST HAVEN

FIG. NO.	INLAND WETLAND IMPACT IW–1 I–95 STA. 0+529, 41.4M LT 1 OF 2	6/08
8		

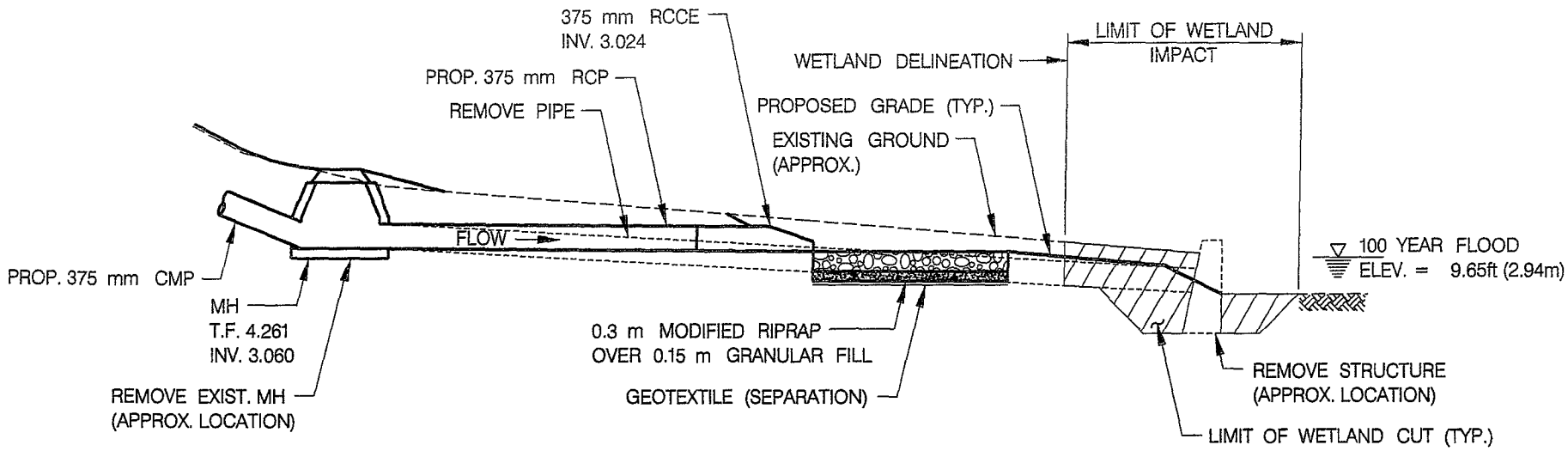

SECTION A–A
(REFER TO FIGURE 9)

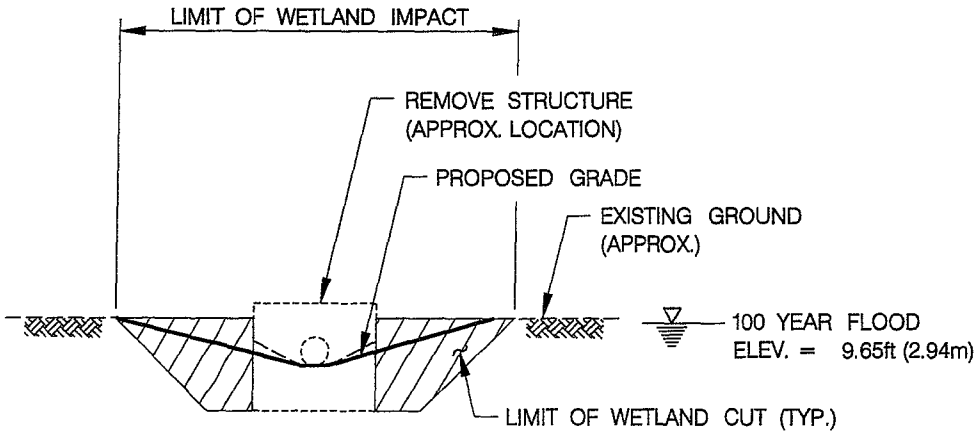

NORTH ELEVATION
(LOOKING SOUTH)

NOTE:
THE CUT VOLUME SHOWN INCLUDES THE VOLUME OF STRUCTURE TO BE REMOVED WITHIN THE WETLANDS.

WETLAND AREA	VOLUME OF CUT/FILL yd³ (m³)	
	CUT	FILL
IW–1	21 (16)	16 (12)

SCALE IN METERS

0 1 2 3 4 5

SCALE 1:100

FOR INFORMATION ONLY

STATE OF CONNECTICUT - DEPARTMENT OF TRANSPORTATION

STATE PROJECT NO. 92–522

RECONSTRUCTION OF I–95 OVER WEST RIVER
NEW HAVEN–WEST HAVEN

FIG. NO.	INLAND WETLAND IMPACT IW–1 I–95 STA. 0+529, 41.4M LT 2 OF 2	6/08
9		

8:53:35 AM 4/28/2009 H:\CGN\P8187 35\FD\Highway\permit plates\Final 05 2007\W&TW\W&TW-10.dgn

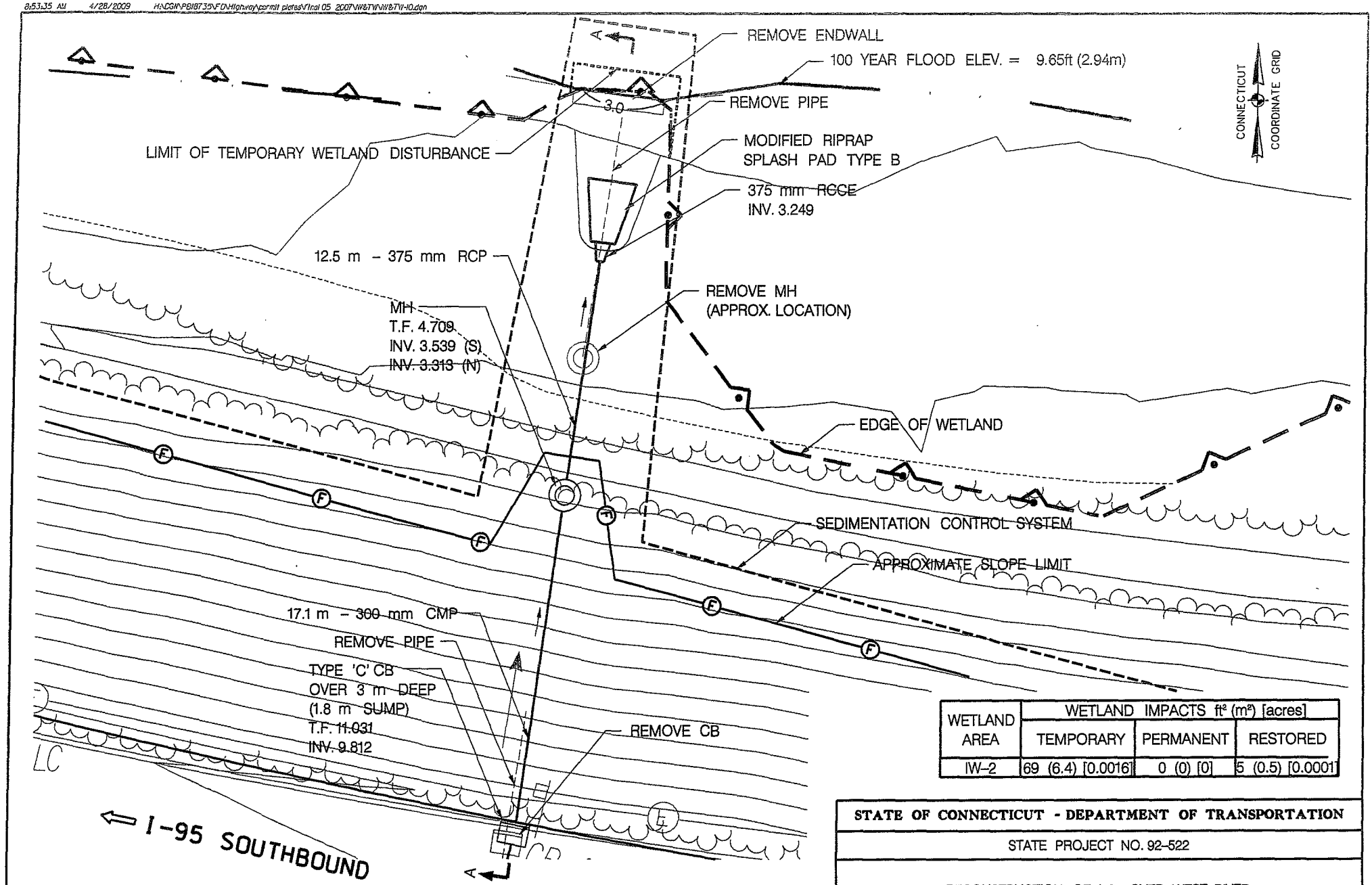

WETLAND AREA	WETLAND IMPACTS ft² (m²) [acres]		
	TEMPORARY	PERMANENT	RESTORED
IW-2	69 (6.4) [0.0016]	0 (0) [0]	5 (0.5) [0.0001]

FOR INFORMATION ONLY

STATE OF CONNECTICUT - DEPARTMENT OF TRANSPORTATION

STATE PROJECT NO. 92-522

RECONSTRUCTION OF I-95 OVER WEST RIVER
NEW HAVEN-WEST HAVEN

FIG. NO.	INLAND WETLAND IMPACT IW-2 I-95 STA. 0+631, 46.9M LT 1 OF 2	6/08
10		

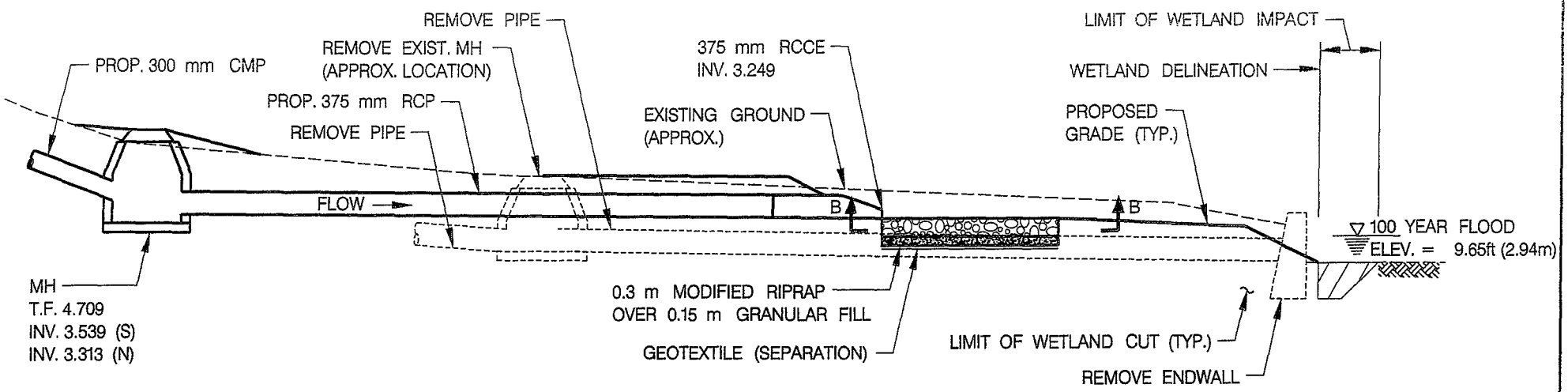

SECTION A–A
(REFER TO FIGURE 11)

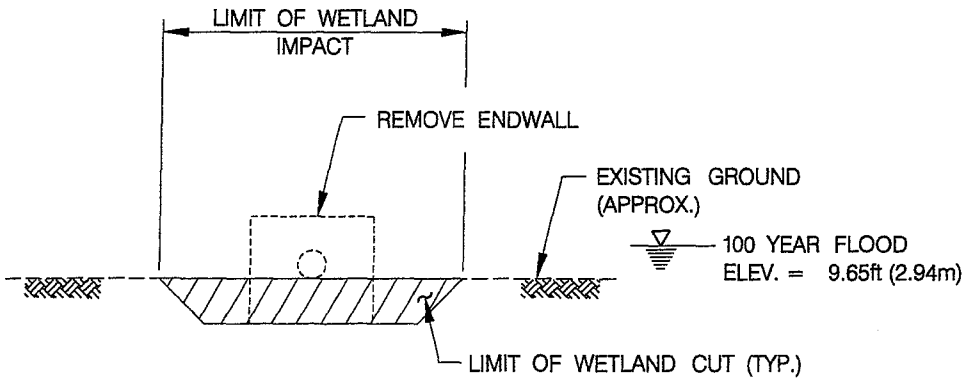

NORTH ELEVATION
(LOOKING SOUTH)

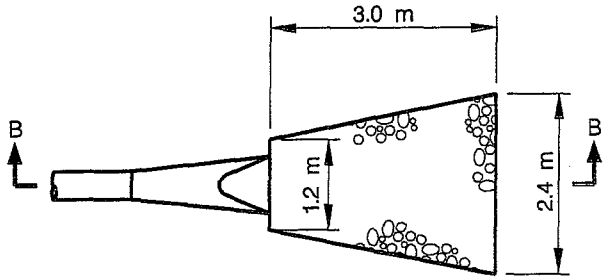

SECTION B–B
MODIFIED RIPRAP SPLASH PAD TYPE B

WETLAND AREA	VOLUME OF CUT/FILL yd³ (m³)	
	CUT	FILL
IW–2	1.8 (1.4)	1.8 (1.4)

FOR INFORMATION ONLY

SCALE IN METERS

0 1 2 3 4 5

SCALE 1:100

STATE OF CONNECTICUT - DEPARTMENT OF TRANSPORTATION

STATE PROJECT NO. 92–522

RECONSTRUCTION OF I–95 OVER WEST RIVER
NEW HAVEN–WEST HAVEN

FIG. NO.		
11	INLAND WETLAND IMPACT IW–2 I–95 STA. 0+631, 46.9M LT 2 OF 2	6/08

8:54:01 AM 4/28/2009 H:\DGN\PB18735\FD\Highway\permit plates\Final 05 2007\IW&TW\IW&TW-12.dgn

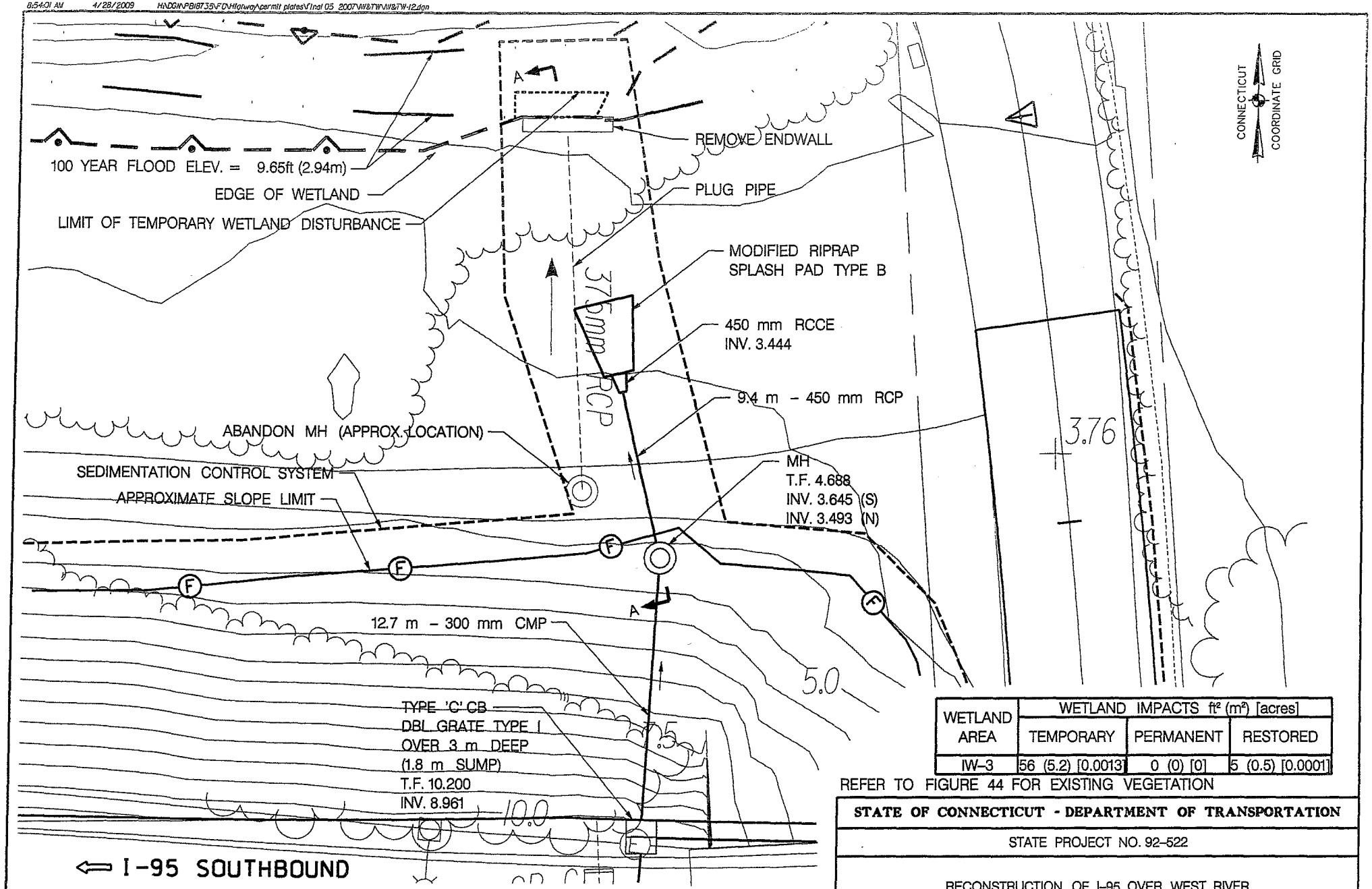

WETLAND AREA	WETLAND IMPACTS ft² (m²) [acres]		
	TEMPORARY	PERMANENT	RESTORED
IW-3	56 (5.2) [0.0013]	0 (0) [0]	5 (0.5) [0.0001]

REFER TO FIGURE 44 FOR EXISTING VEGETATION

FOR INFORMATION ONLY

STATE OF CONNECTICUT - DEPARTMENT OF TRANSPORTATION

STATE PROJECT NO. 92-522

RECONSTRUCTION OF I-95 OVER WEST RIVER
NEW HAVEN-WEST HAVEN

FIG. NO.		
12	INLAND WETLAND IMPACT IW-3 I-95 STA. 0+737, 45.0M LT 1 OF 2	6/08

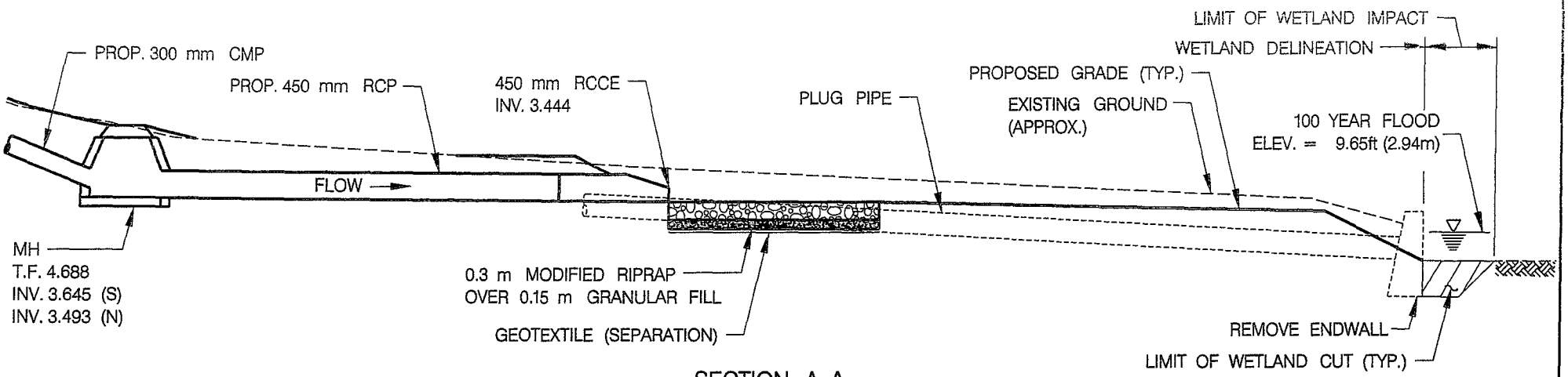

SECTION A–A
(REFER TO FIGURE 13)

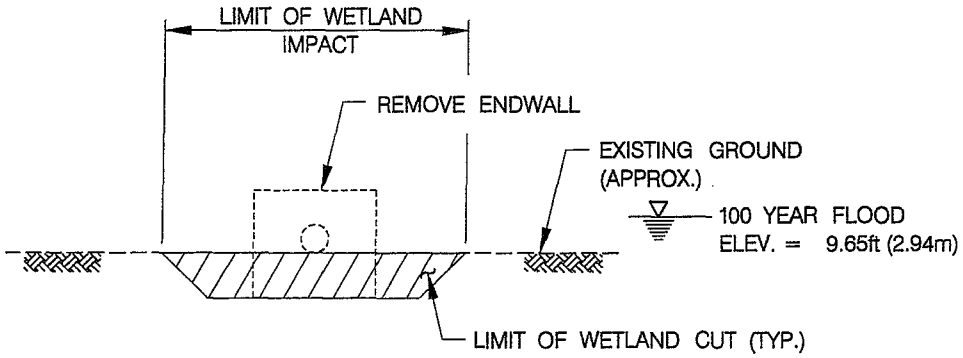

NORTH ELEVATION
(LOOKING SOUTH)

WETLAND AREA	VOLUME OF CUT/FILL yd³ (m³)	
	CUT	FILL
IW–3	2.4 (1.8)	2.4 (1.8)

FOR INFORMATION ONLY

SCALE IN METERS

0 1 2 3 4 5

SCALE 1:100

STATE OF CONNECTICUT - DEPARTMENT OF TRANSPORTATION

STATE PROJECT NO. 92–522

RECONSTRUCTION OF I–95 OVER WEST RIVER
NEW HAVEN–WEST HAVEN

FIG. NO. 13	INLAND WETLAND IMPACT IW–3 I–95 STA. 0+737, 45.0M LT 2 OF 2	5/07

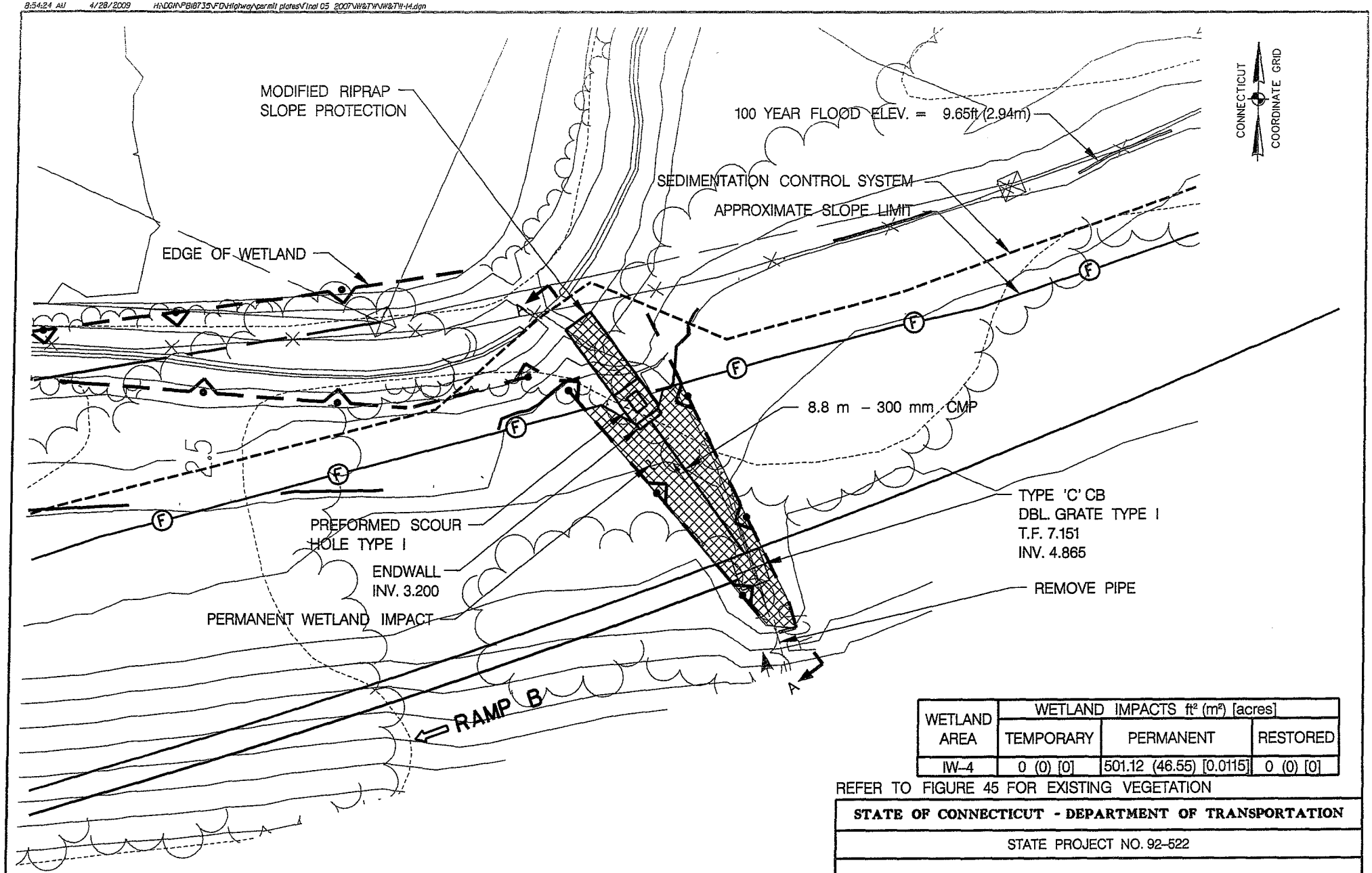

WETLAND AREA	WETLAND IMPACTS ft² (m²) [acres]		
	TEMPORARY	PERMANENT	RESTORED
IW–4	0 (0) [0]	501.12 (46.55) [0.0115]	0 (0) [0]

REFER TO FIGURE 45 FOR EXISTING VEGETATION

FOR INFORMATION ONLY

SCALE IN METERS

0 2.5 5 7.5 10 12.5

SCALE 1:250

STATE OF CONNECTICUT - DEPARTMENT OF TRANSPORTATION

STATE PROJECT NO. 92–522

RECONSTRUCTION OF I–95 OVER WEST RIVER
NEW HAVEN–WEST HAVEN

FIG. NO. 14	INLAND WETLAND IMPACT IW–4 RAMP B STA. 20+143, 14.6M LT 1 OF 2	5/07

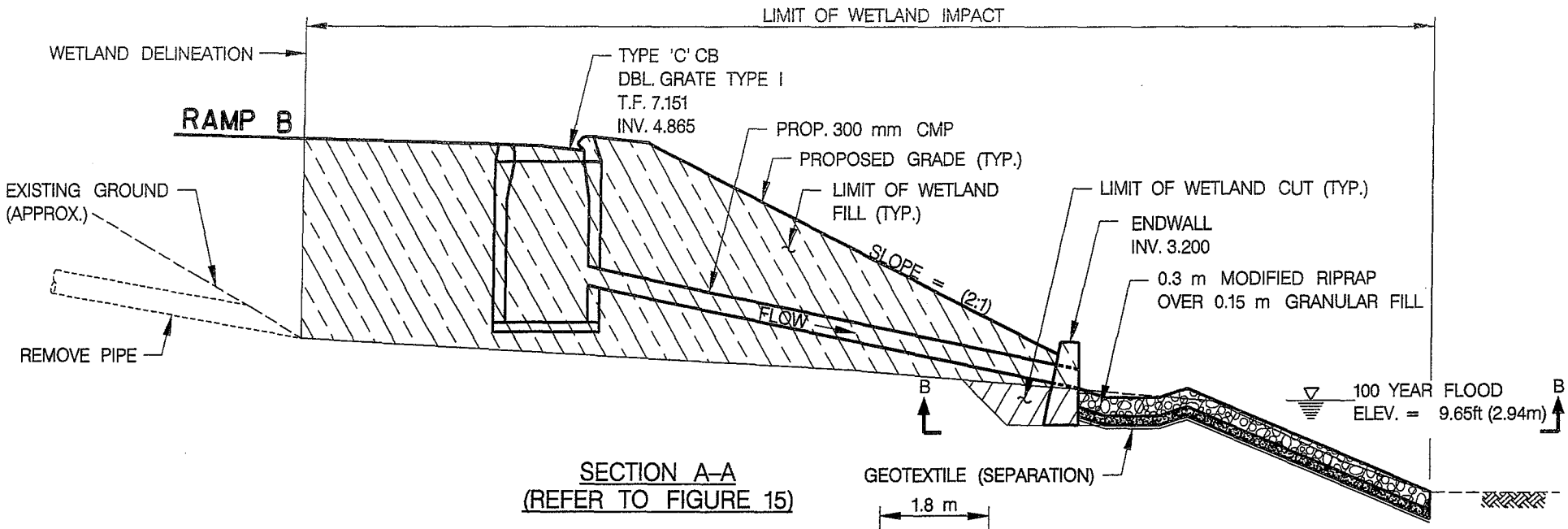

SECTION A–A
(REFER TO FIGURE 15)

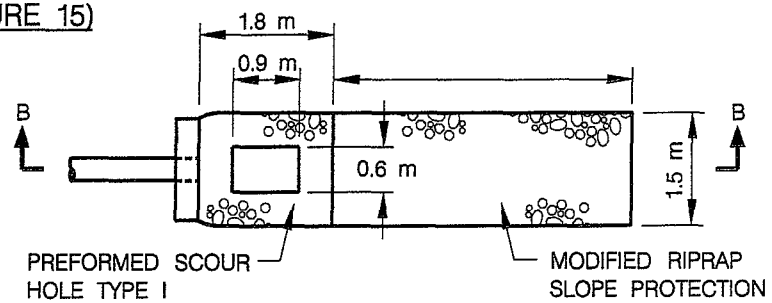

SECTION B–B
MODIFIED RIPRAP SCOUR HOLE AND SLOPE PROTECTION

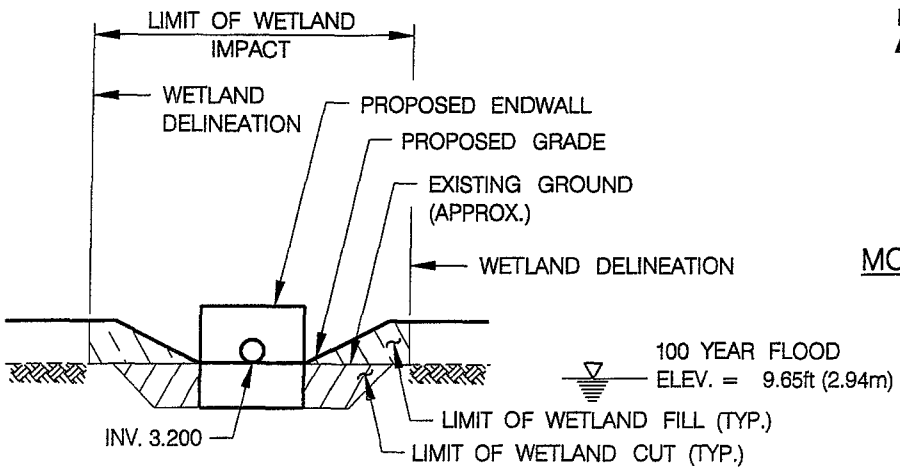

NORTHWEST ELEVATION
(LOOKING SOUTHEAST)

WETLAND AREA	VOLUME OF CUT/FILL yd³ (m³)	
	CUT	FILL
IW–4	123 (94)	7 (5)

FOR INFORMATION ONLY

SCALE IN METERS
0 1 2 3 4 5
SCALE 1:100

STATE OF CONNECTICUT - DEPARTMENT OF TRANSPORTATION

STATE PROJECT NO. 92–522

RECONSTRUCTION OF I–95 OVER WEST RIVER
NEW HAVEN–WEST HAVEN

FIG. NO. 15	INLAND WETLAND IMPACT IW–4 RAMP B STA. 20+143, 14.6M LT 2 OF 2	6/08

8:34:51 AM 4/28/2009 H:\DGN\PB18735\FD\Highway\permit plates\Final 05 2007\IW&TW\IW&TW-16.dgn

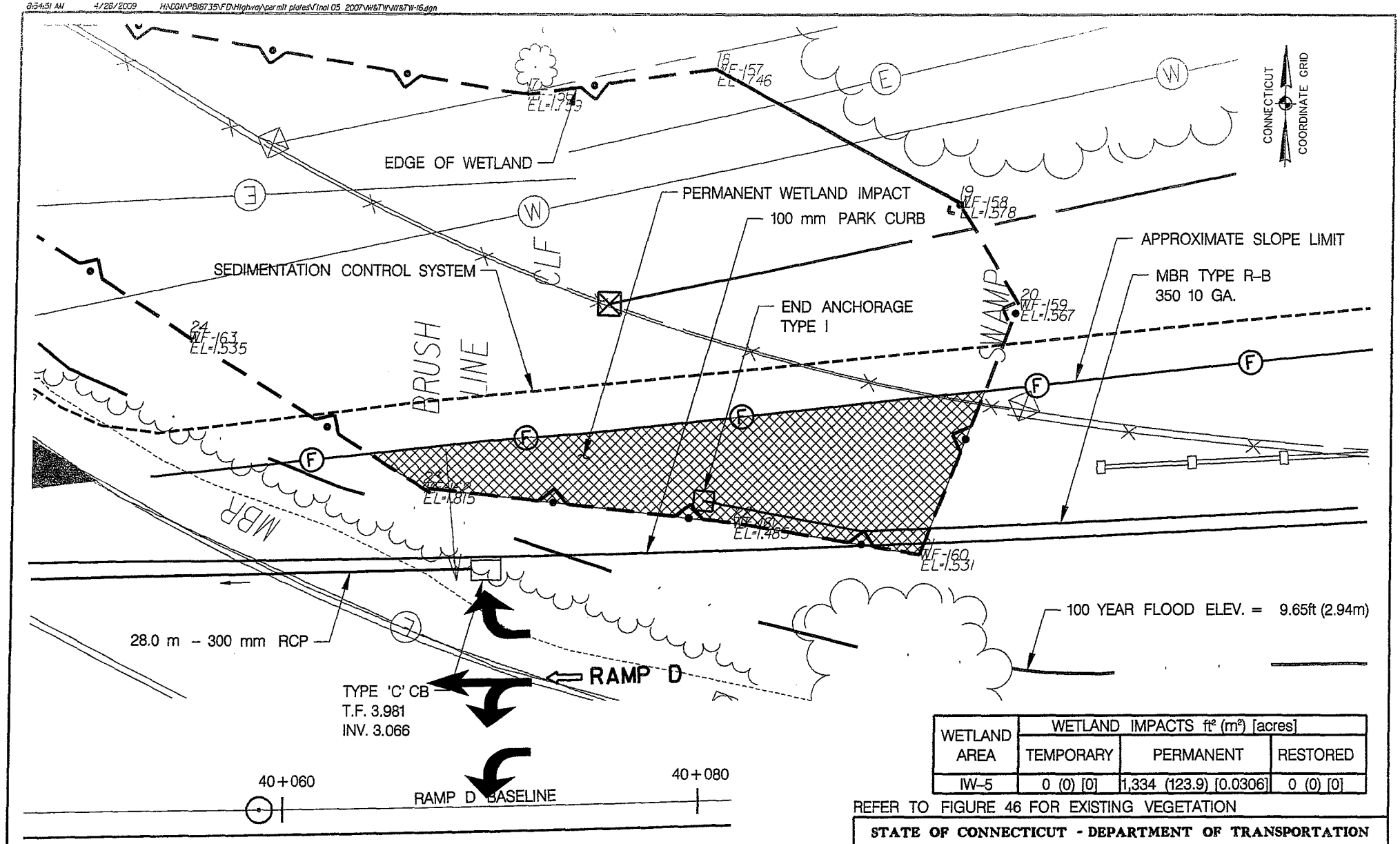

WETLAND AREA	WETLAND IMPACTS ft² (m²) [acres]		
	TEMPORARY	PERMANENT	RESTORED
IW-5	0 (0) [0]	1,334 (123.9) [0.0306]	0 (0) [0]

REFER TO FIGURE 46 FOR EXISTING VEGETATION

FOR INFORMATION ONLY

STATE OF CONNECTICUT - DEPARTMENT OF TRANSPORTATION

STATE PROJECT NO. 92-522

RECONSTRUCTION OF I-95 OVER WEST RIVER
NEW HAVEN-WEST HAVEN

FIG. NO.	INLAND WETLAND IMPACT IW-5 RAMP D STA. 40+064 TO STA. 40+095 1 OF 2	6/08
16		

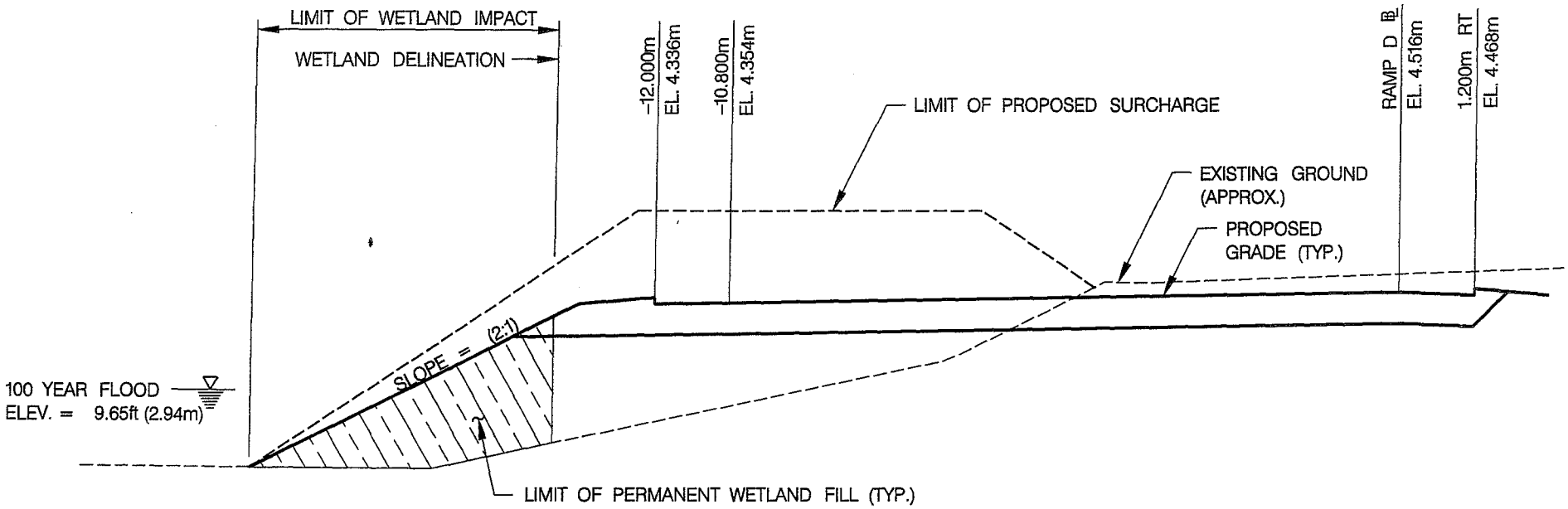

RAMP D – I-95 S.B. OFF RAMP SECTION
STA. 40+080

WETLAND AREA	VOLUME OF CUT/FILL yd³ (m³)	
	CUT	FILL
IW-5	0	188 (144)

FOR INFORMATION ONLY

SCALE IN METERS

0 1 2 3 4 5

SCALE 1:100

STATE OF CONNECTICUT - DEPARTMENT OF TRANSPORTATION

STATE PROJECT NO. 92-522

RECONSTRUCTION OF I-95 OVER WEST RIVER
NEW HAVEN-WEST HAVEN

FIG. NO.	INLAND WETLAND IMPACT IW-5 RAMP D STA. 40+064 TO STA. 40+095 2 OF 2	6/08
17		

8:55:10 AM 4/28/2009 H:\DGN\P818735\FD\Highway\permit plates\Final 05 2007\NW&TW\NW&TW-18.dgn

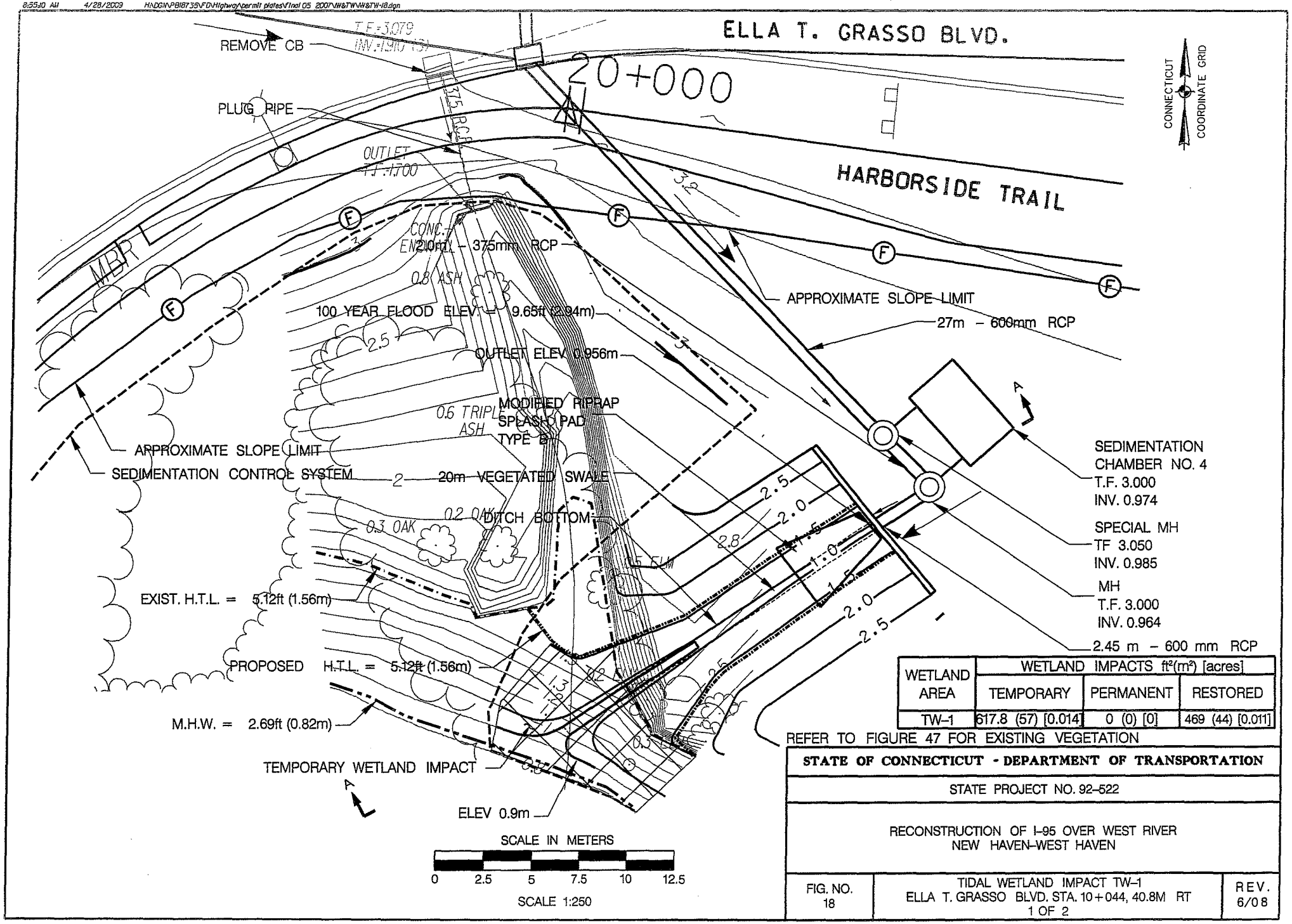

WETLAND AREA	WETLAND IMPACTS ft²(m²) [acres]		
	TEMPORARY	PERMANENT	RESTORED
TW-1	617.8 (57) [0.014]	0 (0) [0]	469 (44) [0.011]

REFER TO FIGURE 47 FOR EXISTING VEGETATION

STATE OF CONNECTICUT - DEPARTMENT OF TRANSPORTATION

STATE PROJECT NO. 92-522

RECONSTRUCTION OF I-95 OVER WEST RIVER
NEW HAVEN-WEST HAVEN

FIG. NO. 18	TIDAL WETLAND IMPACT TW-1 ELLA T. GRASSO BLVD. STA. 10+044, 40.8M RT 1 OF 2	REV. 6/08

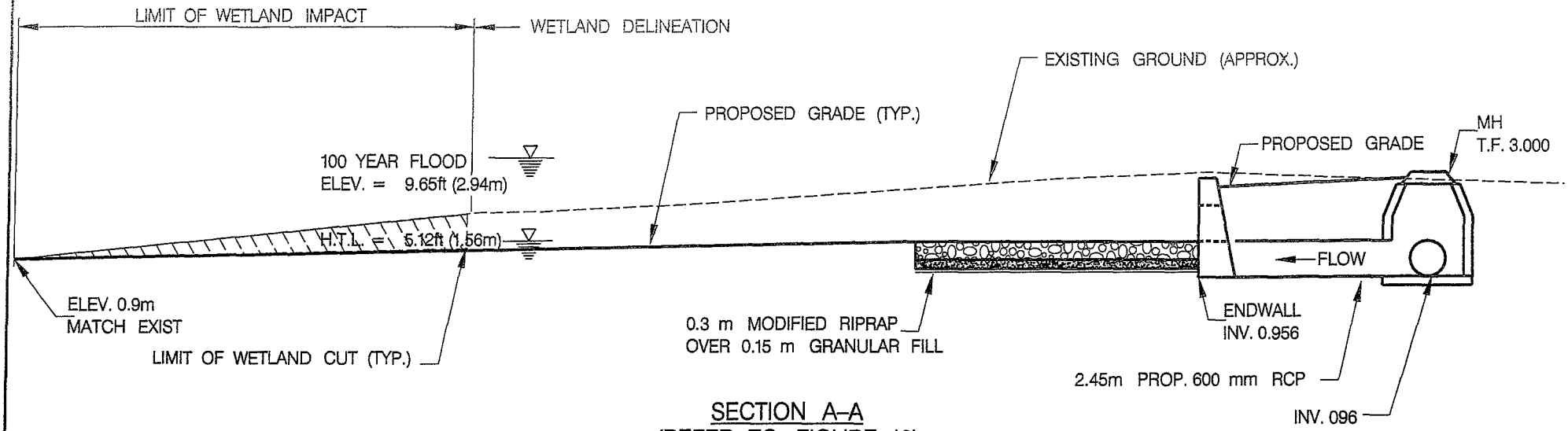

SECTION A–A
(REFER TO FIGURE 18)

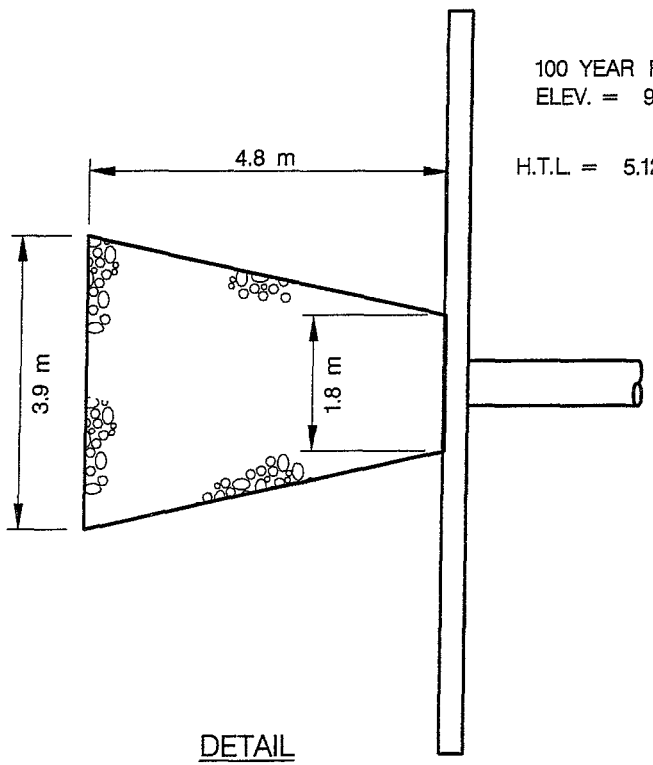

DETAIL
MODIFIED RIPRAP SPLASH PAD TYPE B

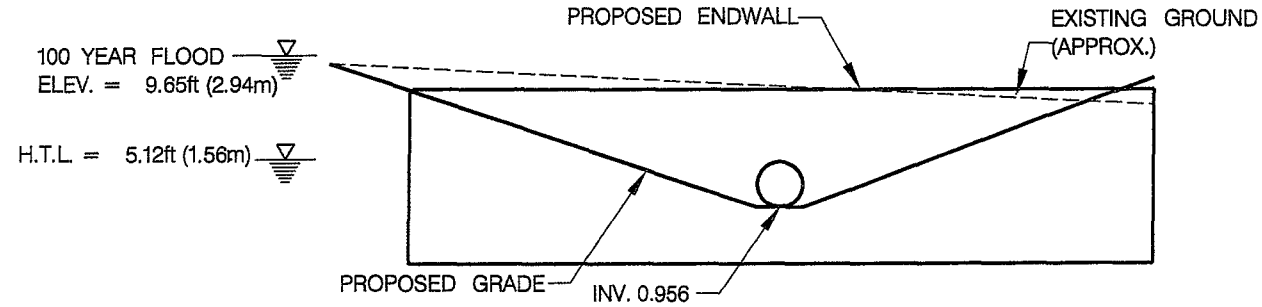

WEST ELEVATION
(LOOKING EAST)

WETLAND AREA	VOLUME OF CUT/FILL yd³ (m³)	
	CUT	FILL
TW–1	34.7 (26.6)	0 (0)

SCALE IN METERS

0 1 2 3 4 5

SCALE 1:100

STATE OF CONNECTICUT - DEPARTMENT OF TRANSPORTATION

STATE PROJECT NO. 92–522

RECONSTRUCTION OF I–95 OVER WEST RIVER
NEW HAVEN–WEST HAVEN

FIG. NO.	TIDAL WETLAND IMPACT TW–1 ELLA T. GRASSO BLVD. STA. 10+044, 40.8M RT 2 OF 2	6/08
19		

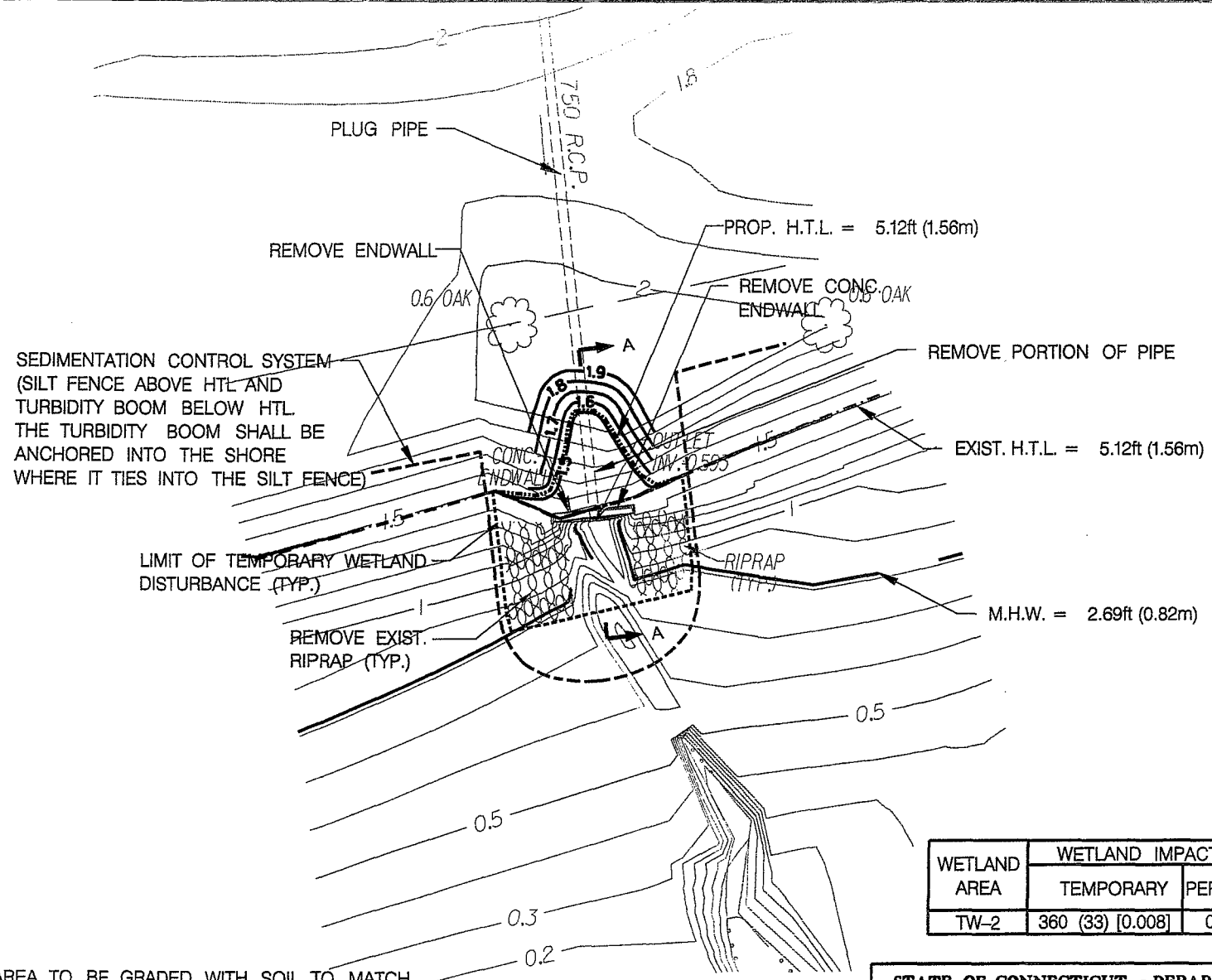

CONNECTICUT COORDINATE GRID

WETLAND AREA	WETLAND IMPACTS ft² (m²) [acres]		
	TEMPORARY	PERMANENT	RESTORED
TW-2	360 (33) [0.008]	0 (0) [0]	473 (44) [0.011]

NOTE:

RESTORED AREA TO BE GRADED WITH SOIL TO MATCH NATIVE SOIL PROPERTIES (SEE STRUCTURAL SOIL SPECIFICATION) EROSION CONTROL MATTING TO BE USED TO STABILIZE THE AREA UNTIL VEGETATION HAS ESTABLISHED. EROSION CONTROL MATTING TO BE BIODEGRADABLE. COORDINATE WITH CONNDOT OFFICE OF ENVIRONMENTAL PLANNING FOR PROPER INSTALLATION AND DISPOSAL METHODS.

SCALE IN METERS

0 2.5 5 7.5 10 12.5

SCALE 1:250

STATE OF CONNECTICUT - DEPARTMENT OF TRANSPORTATION

STATE PROJECT NO. 92-522

RECONSTRUCTION OF I-95 OVER WEST RIVER
NEW HAVEN-WEST HAVEN

FIG. NO.	WETLAND IMPACT TW-2 ELLA T. GRASSO BLVD. STA. 10+223, 65.0M RT 1 OF 2	REV.
20		6/08

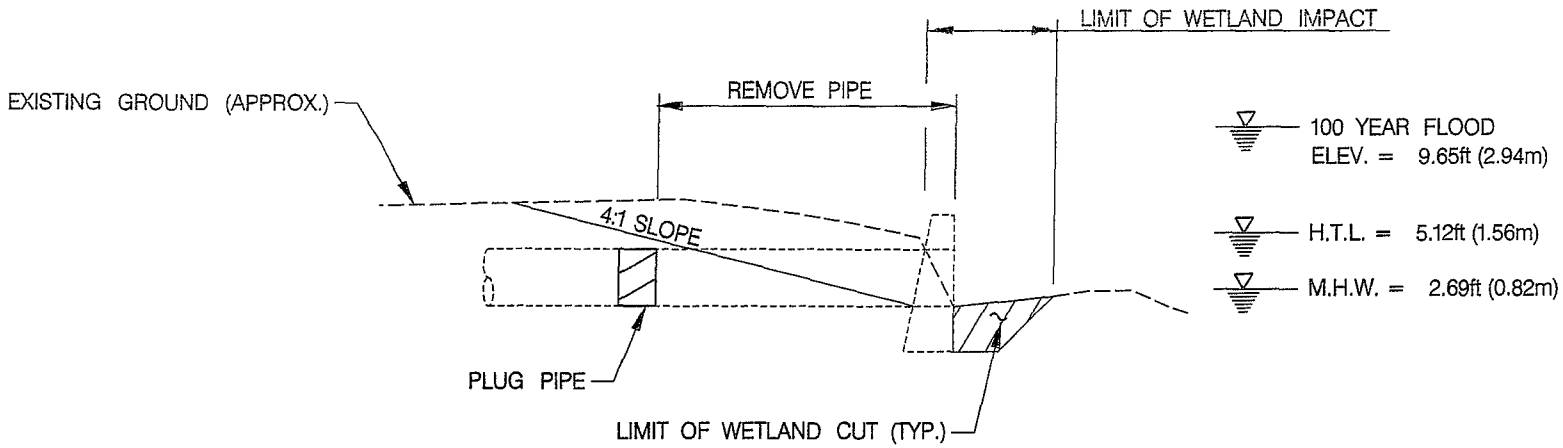

SECTION A–A
(REFER TO FIGURE 20)

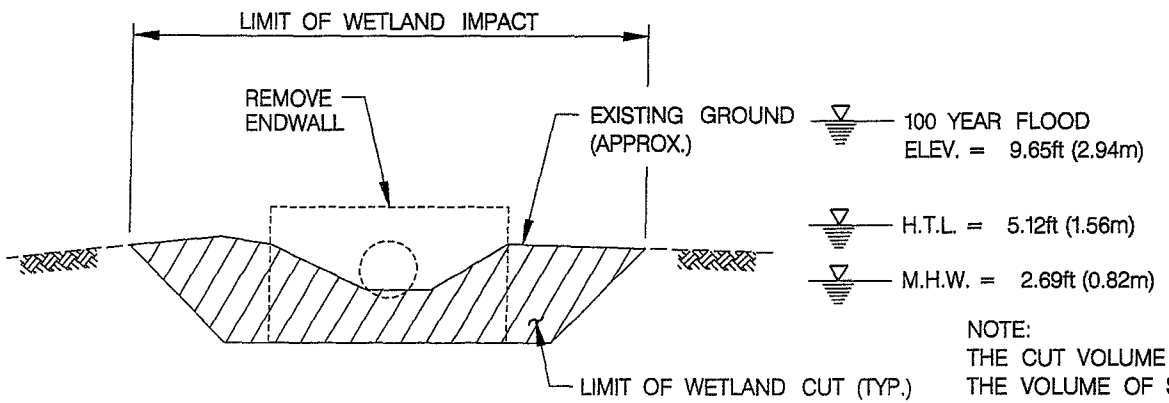

SOUTH ELEVATION
(LOOKING NORTH)

NOTE:
THE CUT VOLUME SHOWN INCLUDES THE VOLUME OF STRUCTURE TO BE REMOVED WITHIN THE WETLANDS.

WETLAND AREA	VOLUME OF CUT/FILL yd³ (m³)	
	CUT	FILL
TW–2	61.4 (46.9)	61.4 (46.9)

SCALE IN METERS

0 1 2 3 4 5

SCALE 1:100

STATE OF CONNECTICUT - DEPARTMENT OF TRANSPORTATION

STATE PROJECT NO. 92–522

RECONSTRUCTION OF I–95 OVER WEST RIVER
NEW HAVEN–WEST HAVEN

FIG. NO.	WETLAND IMPACT TW–2 ELLA T. GRASSO BLVD. STA. 10+223, 65.0M RT 2 OF 2	REV.
21		6/08

9:55:55 AM 4/28/2009 H:\CSN\P818735\FD\Highway\permit plates\Final 05 2007\W&TW\W&TW-22.dgn

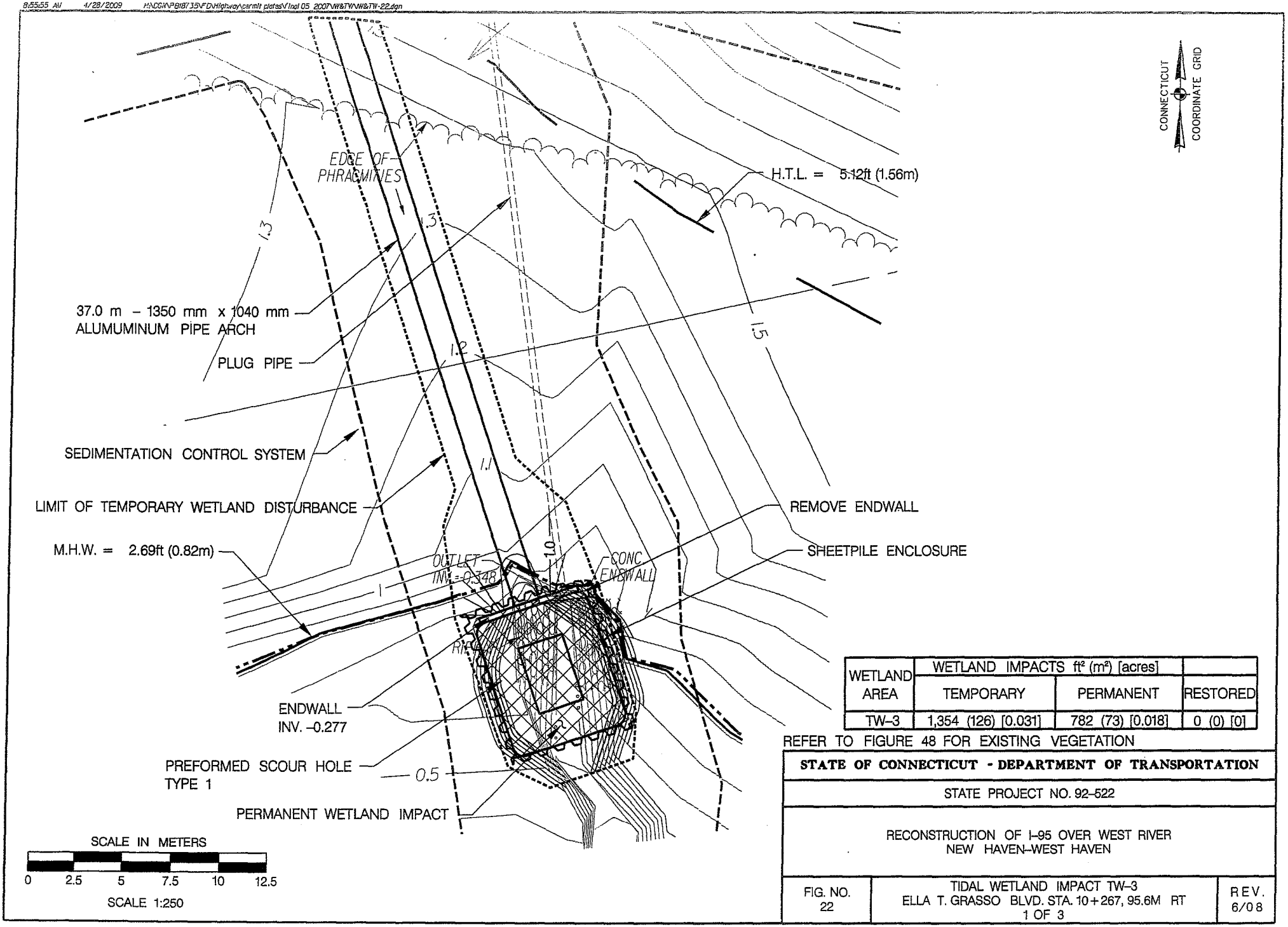

WETLAND AREA	WETLAND IMPACTS ft² (m²) [acres]		
	TEMPORARY	PERMANENT	RESTORED
TW–3	1,354 (126) [0.031]	782 (73) [0.018]	0 (0) [0]

REFER TO FIGURE 48 FOR EXISTING VEGETATION

STATE OF CONNECTICUT - DEPARTMENT OF TRANSPORTATION

STATE PROJECT NO. 92–522

RECONSTRUCTION OF I–95 OVER WEST RIVER
NEW HAVEN–WEST HAVEN

FIG. NO.	TIDAL WETLAND IMPACT TW–3	REV.
22	ELLA T. GRASSO BLVD. STA. 10+267, 95.6M RT 1 OF 3	6/08

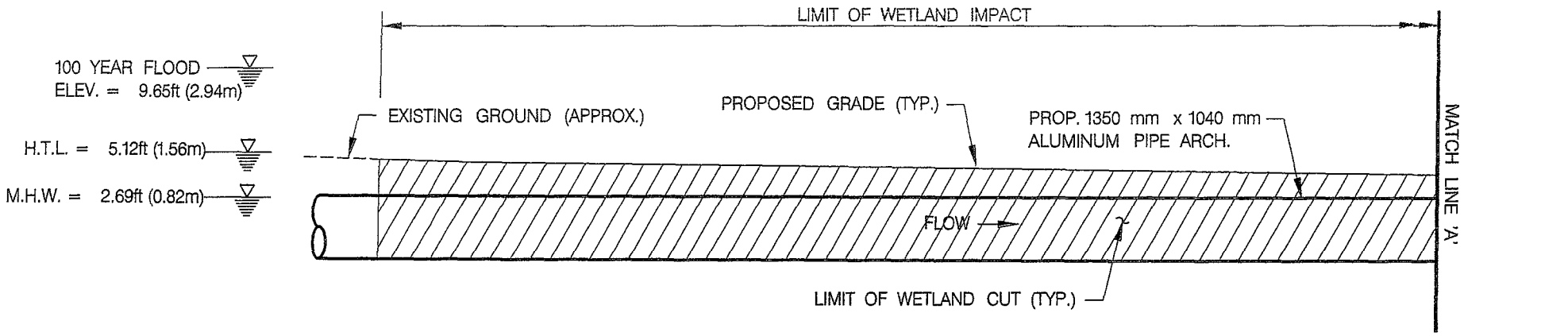

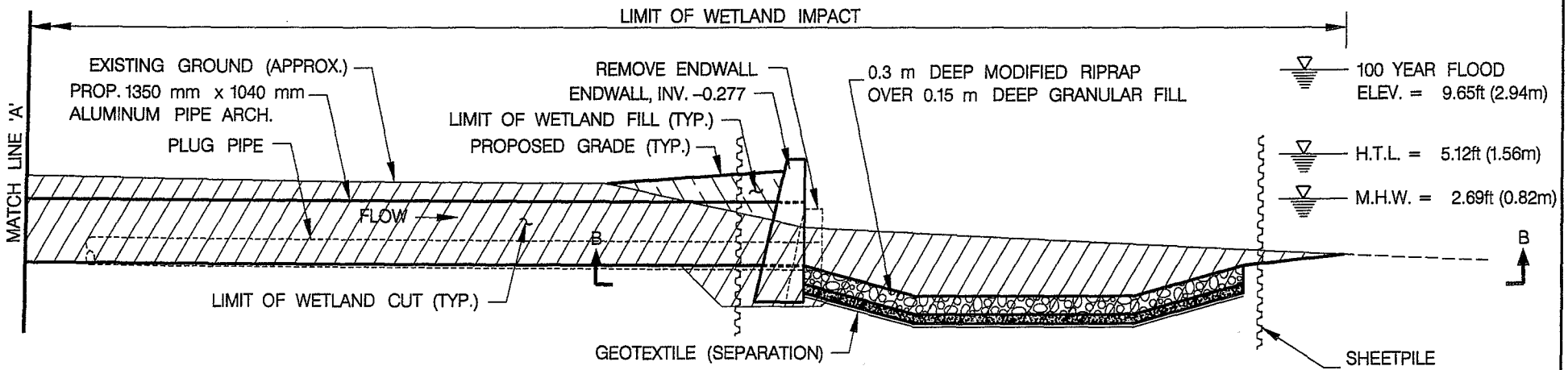

SECTION A–A
(REFER TO FIGURE 22)

NOTE:
THE CUT VOLUME SHOWN INCLUDES THE VOLUME OF STRUCTURE TO BE REMOVED WITHIN THE WETLANDS.

WETLAND AREA	VOLUME OF CUT/FILL yd³ (m³)	
	CUT	FILL
TW–3	410.2 (313.6)	505.6 (386.5)

NOTE:

RESTORED AREA TO BE GRADED WITH SOIL TO MATCH NATIVE SOIL PROPERTIES (SEE STRUCTURAL SOIL SPECIFICATION) EROSION CONTROL MATTING TO BE USED TO STABILIZE THE AREA UNTIL VEGETATION HAS ESTABLISHED. EROSION CONTROL MATTING TO BE BIODEGRADABLE. COORDINATE WITH CONNDOT OFFICE OF ENVIRONMENTAL PLANNING FOR PROPER INSTALLATION AND DISPOSAL METHODS.

SCALE IN METERS
0 1 2 3 4 5
SCALE 1:100

STATE OF CONNECTICUT - DEPARTMENT OF TRANSPORTATION

STATE PROJECT NO. 92–522

RECONSTRUCTION OF I–95 OVER WEST RIVER
NEW HAVEN–WEST HAVEN

FIG. NO.	TIDAL WETLAND IMPACT TW–3 ELLA T. GRASSO BLVD. STA. 10+267, 95.6M RT 2 OF 3	REV.
23		6/08

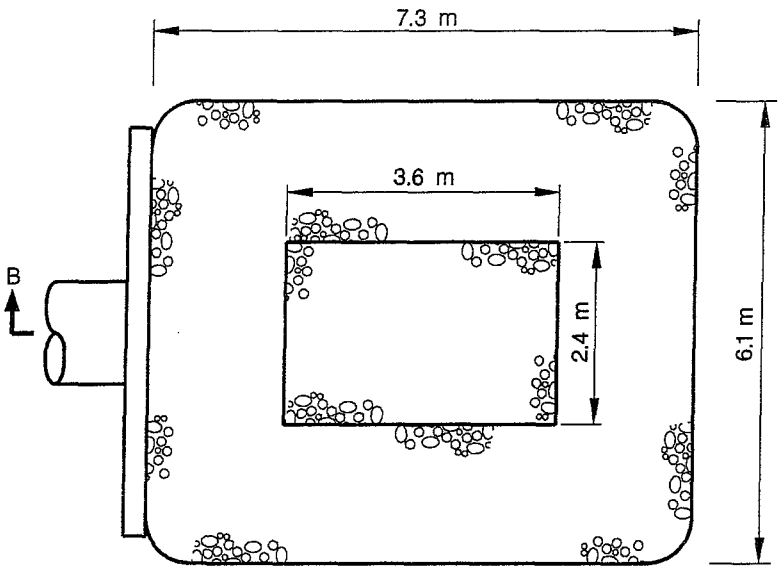

SECTION B–B
PREFORMED SCOUR HOLE TYPE 1

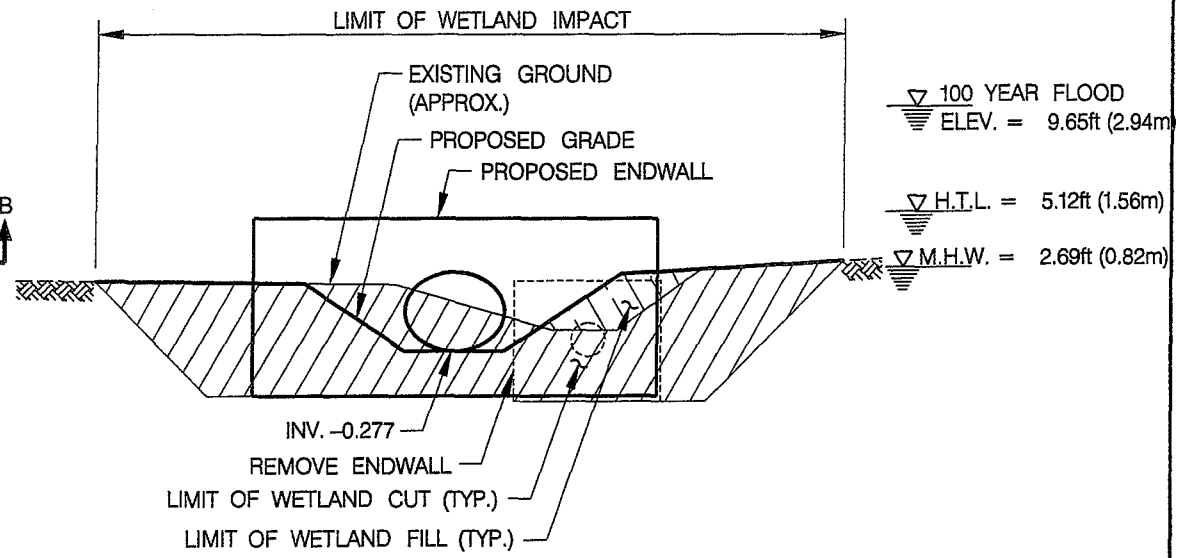

SOUTH ELEVATION
(LOOKING NORTH)

SCALE IN METERS

0 1 2 3 4 5

SCALE 1:100

STATE OF CONNECTICUT - DEPARTMENT OF TRANSPORTATION		
STATE PROJECT NO. 92–522		
RECONSTRUCTION OF I–95 OVER WEST RIVER NEW HAVEN–WEST HAVEN		
FIG. NO. 24	TIDAL WETLAND IMPACT TW–3 ELLA T. GRASSO BLVD. STA. 10+267, 95.6M RT 3 OF 3	6/08

8:55:34 AM 4/28/2009 H:\DGN\PB87335\FD\Highway\permit plates\Final 05 2007\W&TW\W&TW-25.dgn

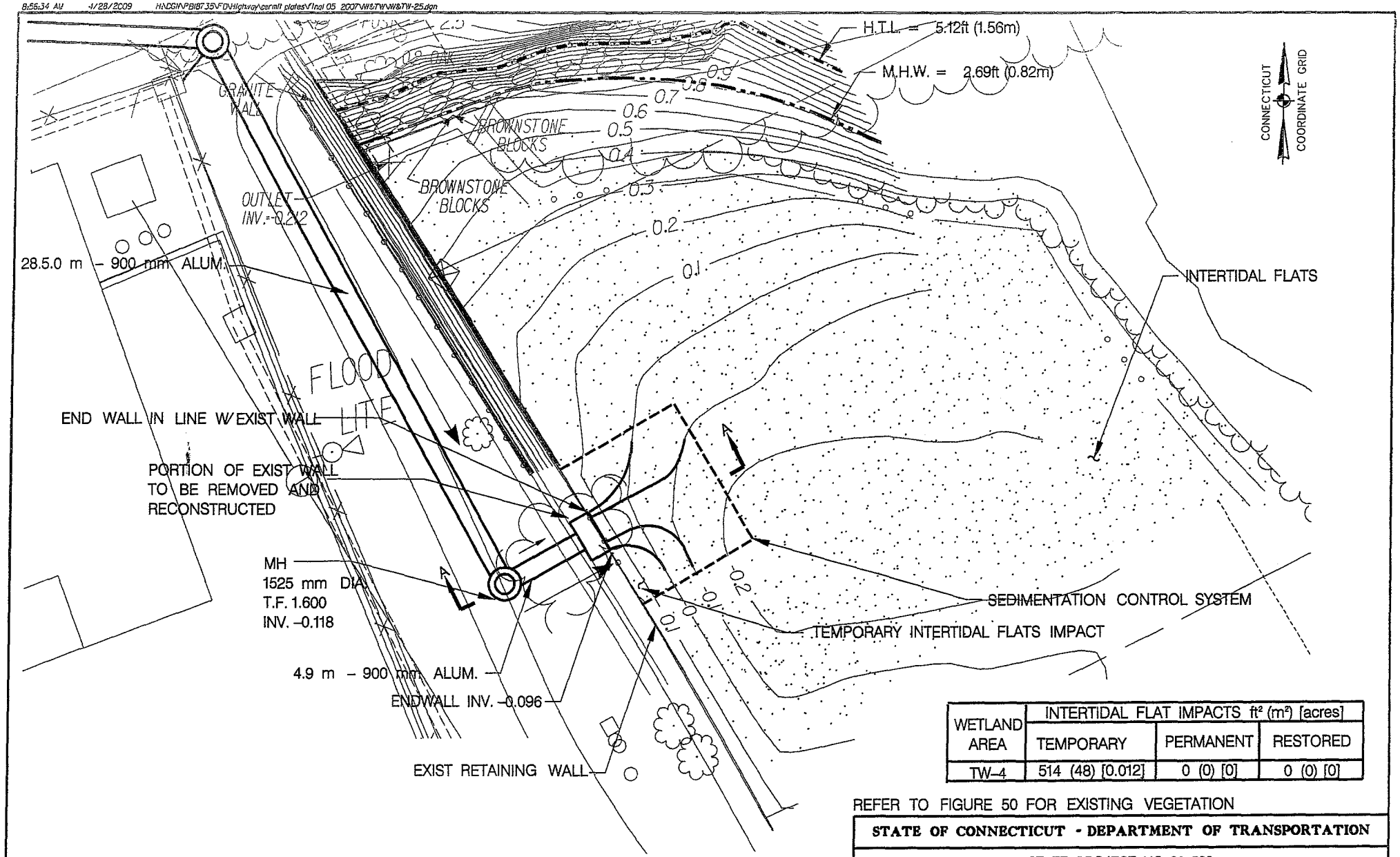

WETLAND AREA	INTERTIDAL FLAT IMPACTS ft² (m²) [acres]		
	TEMPORARY	PERMANENT	RESTORED
TW-4	514 (48) [0.012]	0 (0) [0]	0 (0) [0]

REFER TO FIGURE 50 FOR EXISTING VEGETATION

SCALE IN METERS

0 2.5 5 7.5 10 12.5

SCALE 1:250

STATE OF CONNECTICUT - DEPARTMENT OF TRANSPORTATION

STATE PROJECT NO. 92-522

RECONSTRUCTION OF I-95 OVER WEST RIVER
NEW HAVEN-WEST HAVEN

FIG. NO. 25	TIDAL WETLAND IMPACT TW-4 I-95 STA. 1+900, 65.8m RT 1 OF 2	6/08

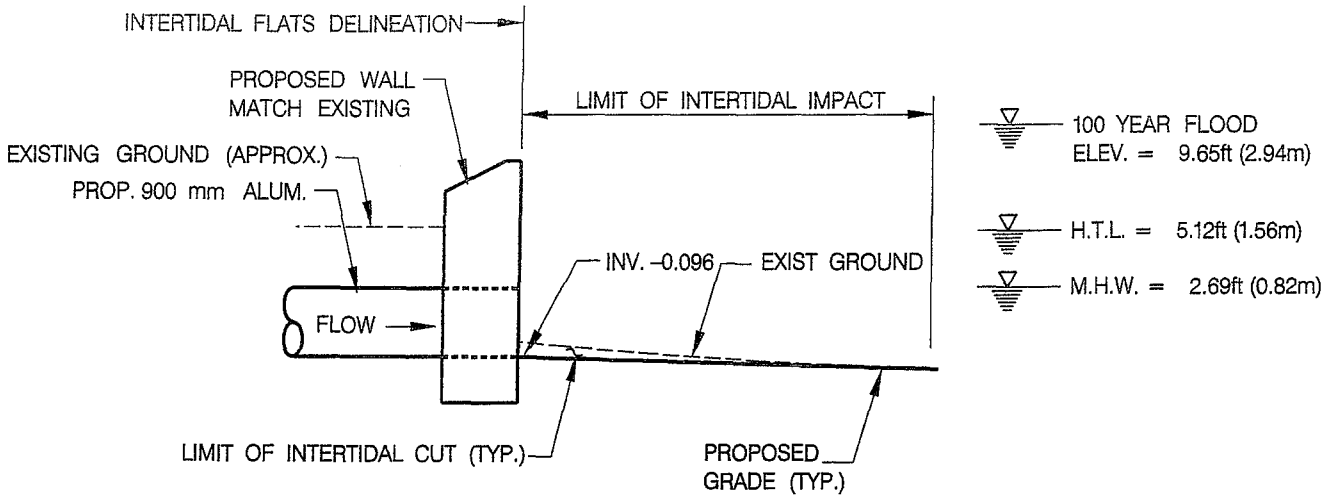

SECTION A-A
(REFER TO FIGURE 25)

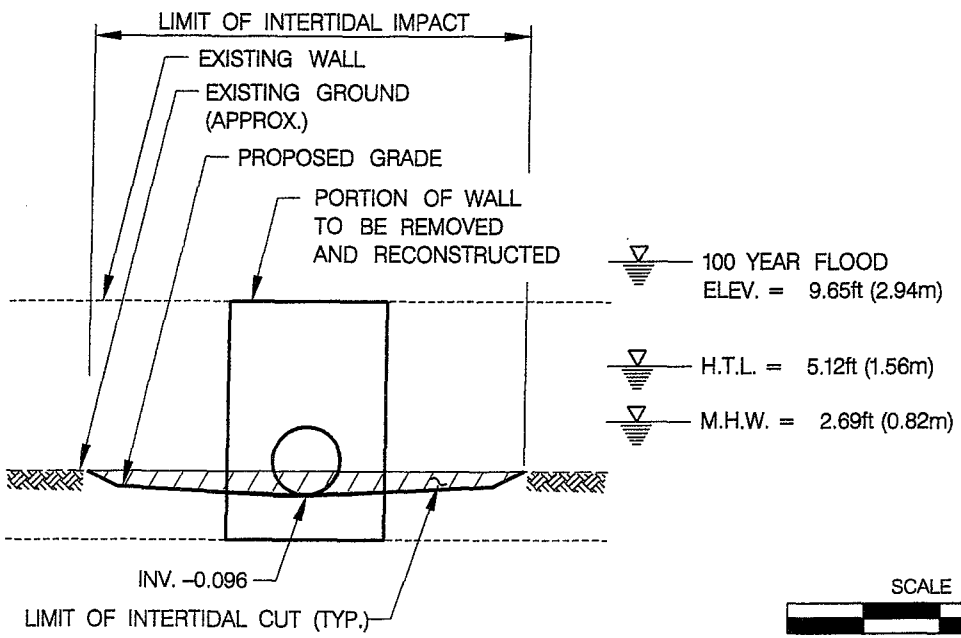

EAST ELEVATION
(LOOKING WEST)

SCALE IN METERS

0 1 2 3 4 5

SCALE 1:100

INTERTIDAL AREA	VOLUME OF CUT/FILL yd³ (m³)	
	CUT	FILL
TW-4	9.46 (7.23)	0 (0)

STATE OF CONNECTICUT - DEPARTMENT OF TRANSPORTATION

STATE PROJECT NO. 92-522

RECONSTRUCTION OF I-95 OVER WEST RIVER
NEW HAVEN-WEST HAVEN

FIG. NO. 26	TIDAL WETLAND IMPACT TW-4 I-95 STA. 1+900, 63.5m RT 2 OF 2	6/08

8:57:18 AM 4/28/2009 H:\DGN\PB18735\FD\Highway\permit plates\Final 05 2007\NW&TW\NW&TW-27.dgn

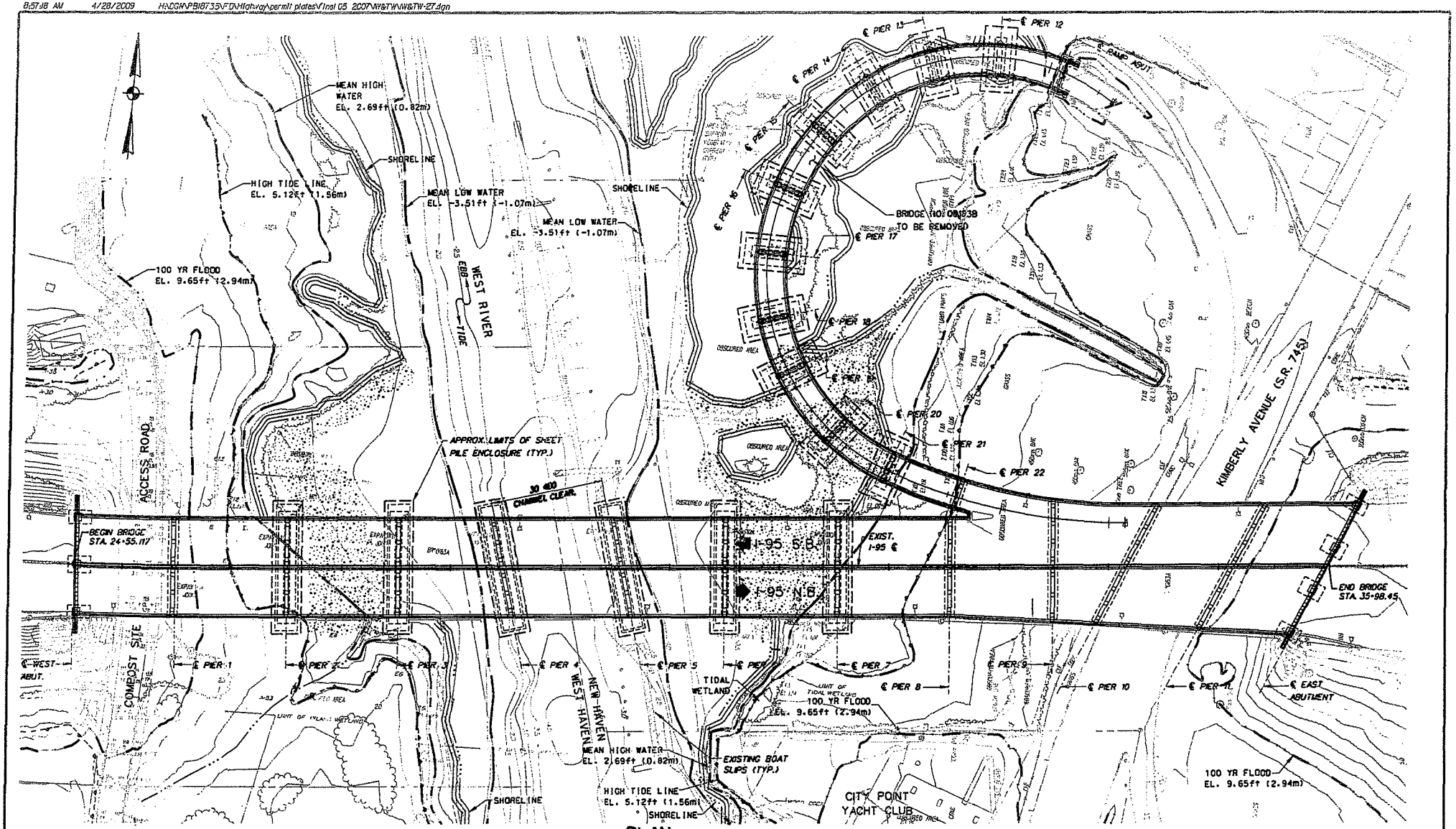

PLAN

NOTES:

1. INFORMATION REFERRING TO THE EXISTING STRUCTURE HAS BEEN TAKEN FROM THE ORIGINAL DESIGN DRAWINGS DATED 1955.
2. STATIONING SHOWN IS IN ENGLISH UNITS.
3. FOR 100 YEAR AND TIDAL WETLAND IMPACTS, SEE FIGURES 3 AND 8, RESPECTIVELY.

SCALE IN METERS

0 20 40 60 80 100

SCALE 1:1500

LEGEND

- MEAN LOW WATER LINE
- HIGH TIDE LINE
- 100 YR FLOOD BOUNDARY
- MEAN HIGH WATER LINE

WATER ELEVATIONS (NAVD 88)		
DESCRIPTION	ELEVATION FT	(M)
MEAN LOW WATER	-3.51	(-1.07)
MEAN HIGH WATER	2.69	(0.82)
HIGH TIDE LINE	5.12	(1.56)
100-YR. FLOODPLAIN (FEMA)	9.65	(2.94)

REFER TO FIGURE 49 FOR EXISTING VEGETATION

STATE OF CONNECTICUT - DEPARTMENT OF TRANSPORTATION

STATE PROJECT NO. 92-522

RECONSTRUCTION OF I-95 OVER WEST RIVER
NEW HAVEN-WEST HAVEN

FIG. NO.	IMPACT AREA TW-5 & TW-6 EXISTING BRIDGE DEMOLITION PLAN	6/08
27		

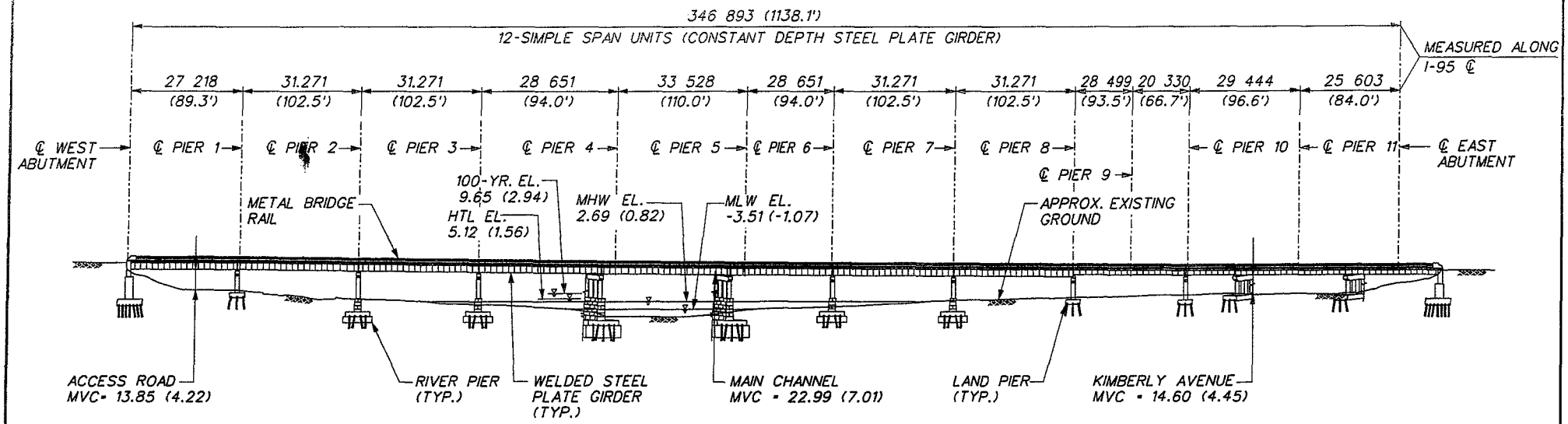

BRIDGE NO. 163A
SOUTH ELEVATION

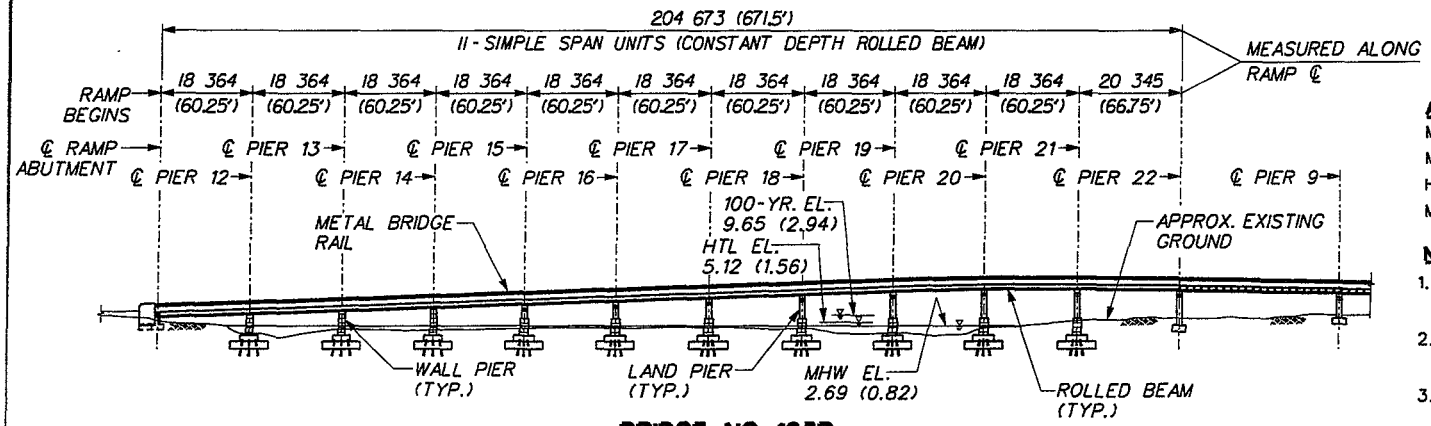

BRIDGE NO. 163B
WEST ELEVATION (DEVELOPED)

ABBREVIATIONS:

MHW: MEAN HIGH WATER
MLW: MEAN LOW WATER
HTL: HIGH TIDE LINE
MVC: MINIMUM VERTICAL CLEARANCE

NOTES:

1. EXISTING STRUCTURE DIMENSIONS SHOWN HAVE BEEN TAKEN FROM THE ORIGINAL DESIGN DRAWINGS DATED 1955.
2. ALL DIMENSIONS SHOWN ARE IN MILLIMETERS EXCEPT IF NOTED OTHERWISE.
3. ALL ELEVATIONS ARE GIVEN IN METERS AND ARE BASED ON N.A.V.D. 1988.
4. FOR 100 YEAR AND TIDAL WETLAND IMPACTS, SEE FIGURES 3 AND 8, RESPECTIVELY.

SCALE IN METERS
0 20 40 60 80 100
SCALE 1:1500

STATE OF CONNECTICUT - DEPARTMENT OF TRANSPORTATION		
STATE PROJECT NO. 92-522		
RECONSTRUCTION OF I-95 OVER WEST RIVER NEW HAVEN-WEST HAVEN		
FIG. NO. 28	IMPACT AREA TW-5 & TW-6 EXISTING BRIDGE ELEVATIONS	6/08

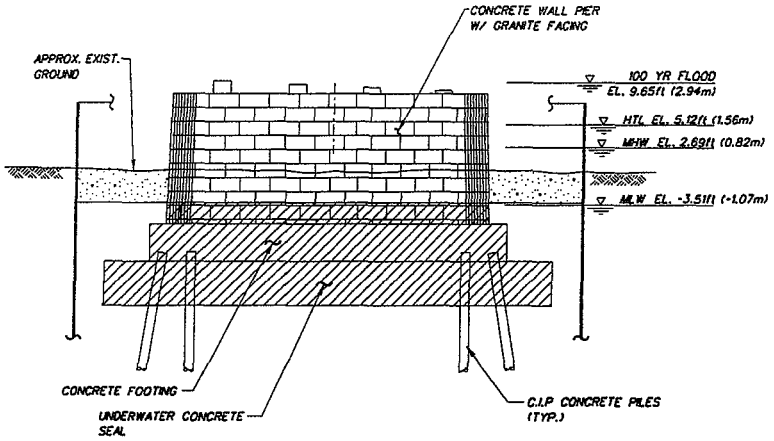

ELEVATION

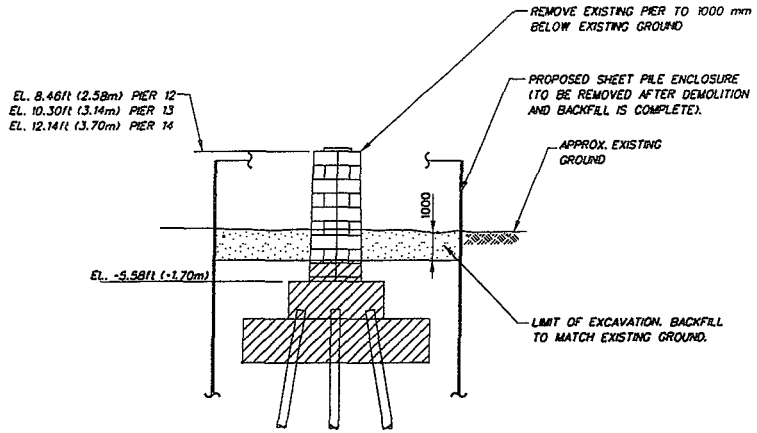

END VIEW

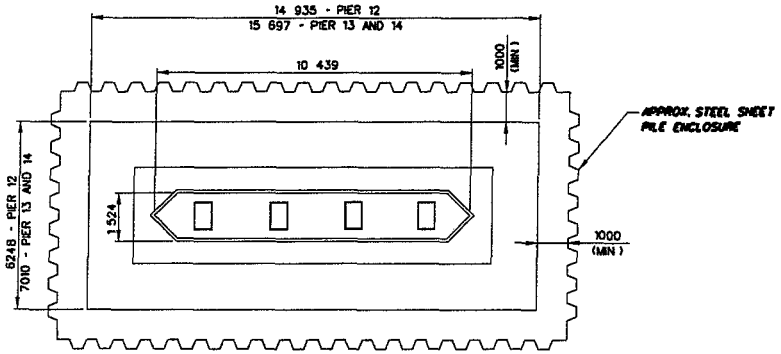

PLAN

NOTES:

1. THIS DRAWING SHOWS BASIC SIMPLIFIED PIER DETAILS ONLY.
2. CROSS-HATCHED AREAS SHOWN ON THIS DRAWING INDICATES EXISTING PIER COMPONENTS TO REMAIN. ALL OTHER PIER COMPONENTS TO BE REMOVED.
3. FOR 100 YEAR AND TIDAL WETLAND IMPACTS, SEE FIGURES 3 AND 8, RESPECTIVELY..

PIER REMOVAL SEQUENCE:

1. CONSTRUCT STEEL SHEET PILE ENCLOSURE, REMOVE OBSTRUCTIONS AS NECESSARY.
2. EXCAVATE WITHIN ENCLOSURE TO PIER REMOVAL ELEVATION. ALL MATERIAL EXCAVATED WITHIN THE ENCLOSURE SHALL BE REMOVED AND DISPOSED OF AT AN APPROVED UPLAND DISPOSAL SITE.
3. DEMOLISH REINFORCED CONCRETE PIER TO THE ELEVATION INDICATED. REMOVE ALL DEMOLITION DEBRIS.
4. BACKFILL IN VEGETATED WETLAND AREAS SHALL CONSIST OF NATURAL OR MANMADE PLANTING SUBSTRATE OR TOPSOIL, CONSISTING OF SOILS CONTAINING NOT LESS THAN 75% SAND BY WEIGHT AND AN ORGANIC CONTENT OF NOT LESS THAN 10% AND NOT MORE THAN 15%
5. REMOVE STEEL SHEET PILE ENCLOSURE IN ITS ENTIRETY AFTER BACKFILL HAS BEEN COMPLETED AND ACCEPTED BY THE ENGINEER.

STATE OF CONNECTICUT - DEPARTMENT OF TRANSPORTATION

STATE PROJECT NO. 92-522

RECONSTRUCTION OF I-95 OVER WEST RIVER
NEW HAVEN-WEST HAVEN

FIG. NO.	IMPACT AREA TW-5 PIER REMOVAL DETAILS: PIERS 12, 13 & 14	6/08
29		

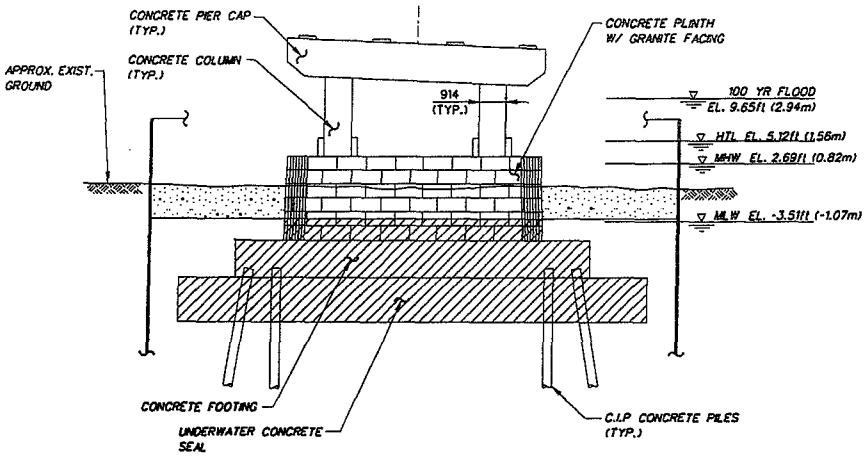

ELEVATION

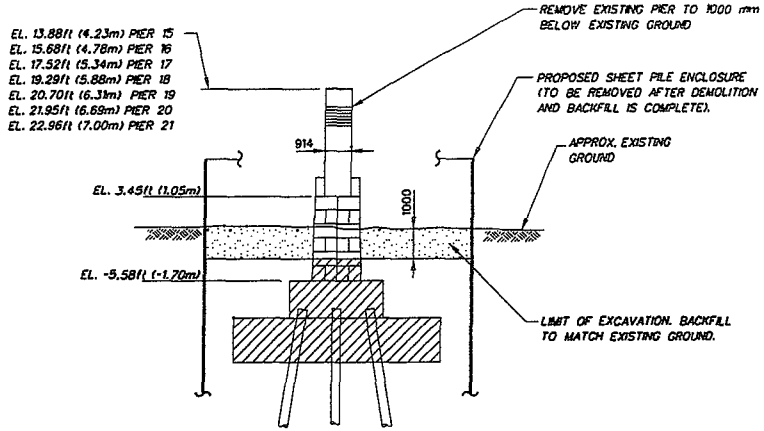

END VIEW

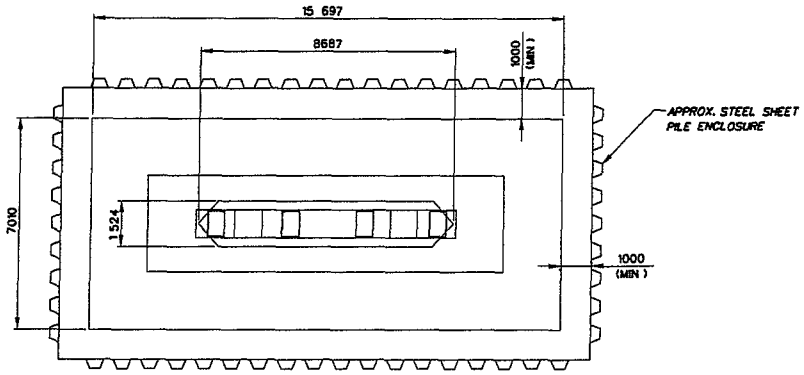

PLAN

NOTES:

1. THIS DRAWING SHOWS BASIC SIMPLIFIED PIER DETAILS ONLY.
2. CROSS-HATCHED AREAS SHOWN ON THIS DRAWING INDICATES EXISTING PIER COMPONENTS TO REMAIN. ALL OTHER PIER COMPONENTS TO BE REMOVED.
3. FOR 100 YEAR AND TIDAL WETLAND IMPACTS, SEE FIGURES 3 AND 8, RESPECTIVELY.

PIER REMOVAL SEQUENCE:

1. CONSTRUCT STEEL SHEET PILE ENCLOSURE, REMOVE OBSTRUCTIONS AS NECESSARY.
2. EXCAVATE WITHIN ENCLOSURE TO PIER REMOVAL ELEVATION. ALL MATERIAL EXCAVATED WITHIN THE ENCLOSURE SHALL BE REMOVED AND DISPOSED OF AT AN APPROVED UPLAND DISPOSAL SITE.
3. DEMOLISH REINFORCED CONCRETE PIER TO THE ELEVATION INDICATED. REMOVE ALL DEMOLITION DEBRIS.
4. BACKFILL IN VEGETATED WETLAND AREAS SHALL CONSIST OF NATURAL OR MANMADE PLANTING SUBSTRATE OR TOPSOIL, CONSISTING OF SOILS CONTAINING NOT LESS THAN 75% SAND BY WEIGHT AND AN ORGANIC CONTENT OF NOT LESS THAN 10% AND NOT MORE THAN 15%
5. REMOVE STEEL SHEET PILE ENCLOSURE IN ITS ENTIRETY AFTER BACKFILL HAS BEEN COMPLETED AND ACCEPTED BY THE ENGINEER.

STATE OF CONNECTICUT - DEPARTMENT OF TRANSPORTATION		
STATE PROJECT NO. 92-522		
RECONSTRUCTION OF I-95 OVER WEST RIVER NEW HAVEN-WEST HAVEN		
FIG. NO. 30	IMPACT AREA TW-5 PIER REMOVAL DETAILS: PIERS 15 – 21	6/08

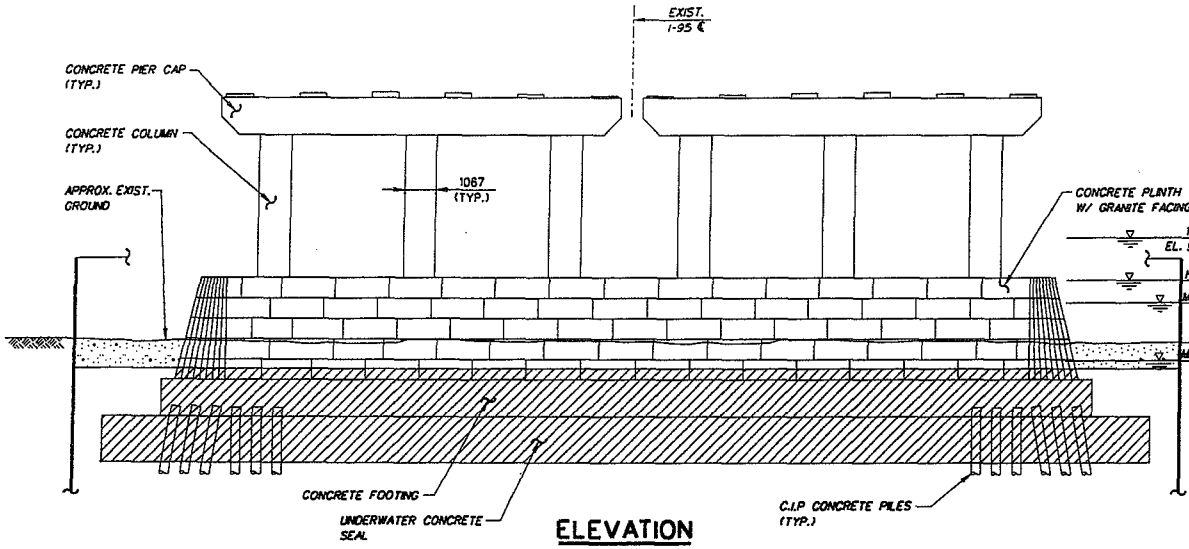

ELEVATION

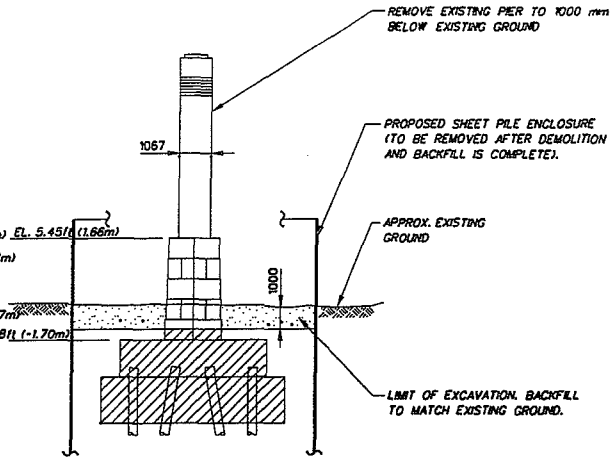

END VIEW

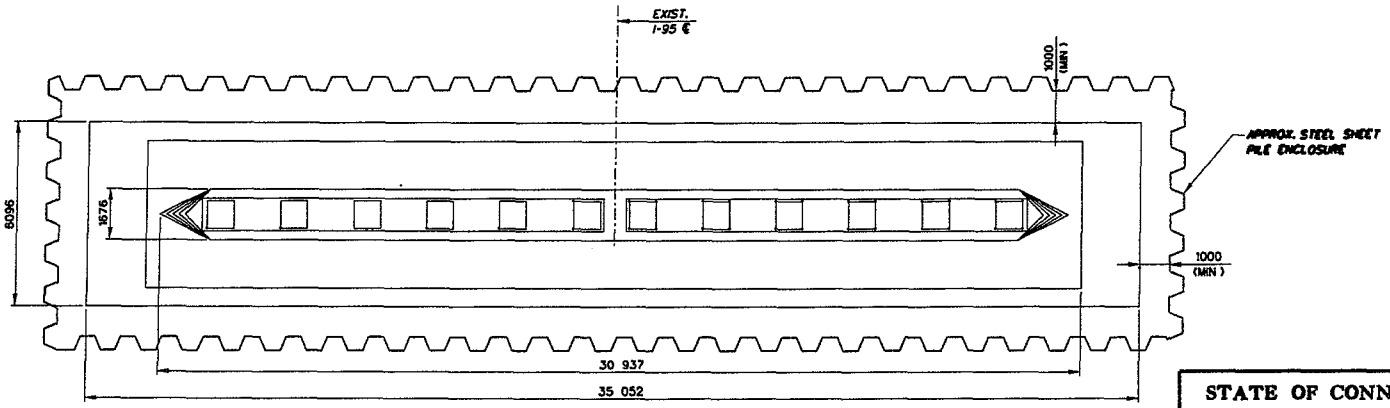

PLAN

NOTES:

1. THIS DRAWING SHOWS BASIC SIMPLIFIED PIER DETAILS ONLY.
2. CROSS-HATCHED AREAS SHOWN ON THIS DRAWING INDICATES EXISTING PIER COMPONENTS TO REMAIN. ALL OTHER PIER COMPONENTS TO BE REMOVED.
3. FOR 100 YEAR AND TIDAL WETLAND IMPACTS, SEE FIGURES 3 AND 8, RESPECTIVELY.

PIER REMOVAL SEQUENCE:

1. CONSTRUCT STEEL SHEET PILE ENCLOSURE, REMOVE OBSTRUCTIONS AS NECESSARY.
2. EXCAVATE WITHIN ENCLOSURE TO PIER REMOVAL ELEVATION. ALL MATERIAL EXCAVATED WITHIN THE ENCLOSURE SHALL BE REMOVED AND DISPOSED OF AT AN APPROVED UPLAND DISPOSAL SITE.
3. DEMOLISH REINFORCED CONCRETE PIER TO THE ELEVATION INDICATED. REMOVE ALL DEMOLITION DEBRIS.
4. BACKFILL IN VEGETATED WETLAND AREAS SHALL CONSIST OF NATURAL OR MANMADE PLANTING SUBSTRATE OR TOPSOIL, CONSISTING OF SOILS CONTAINING NOT LESS THAN 75% SAND BY WEIGHT AND AN ORGANIC CONTENT OF NOT LESS THAN 10% AND NOT MORE THAN 15%.
5. REMOVE STEEL SHEET PILE ENCLOSURE IN ITS ENTIRETY AFTER BACKFILL HAS BEEN COMPLETED AND ACCEPTED BY THE ENGINEER.

STATE OF CONNECTICUT - DEPARTMENT OF TRANSPORTATION

STATE PROJECT NO. 92-522

RECONSTRUCTION OF I-95 OVER WEST RIVER
NEW HAVEN-WEST HAVEN

FIG. NO.	IMPACT AREA TW-6 PIER REMOVAL DETAILS: PIERS 2, 3, 6 & 7	6/08
31		

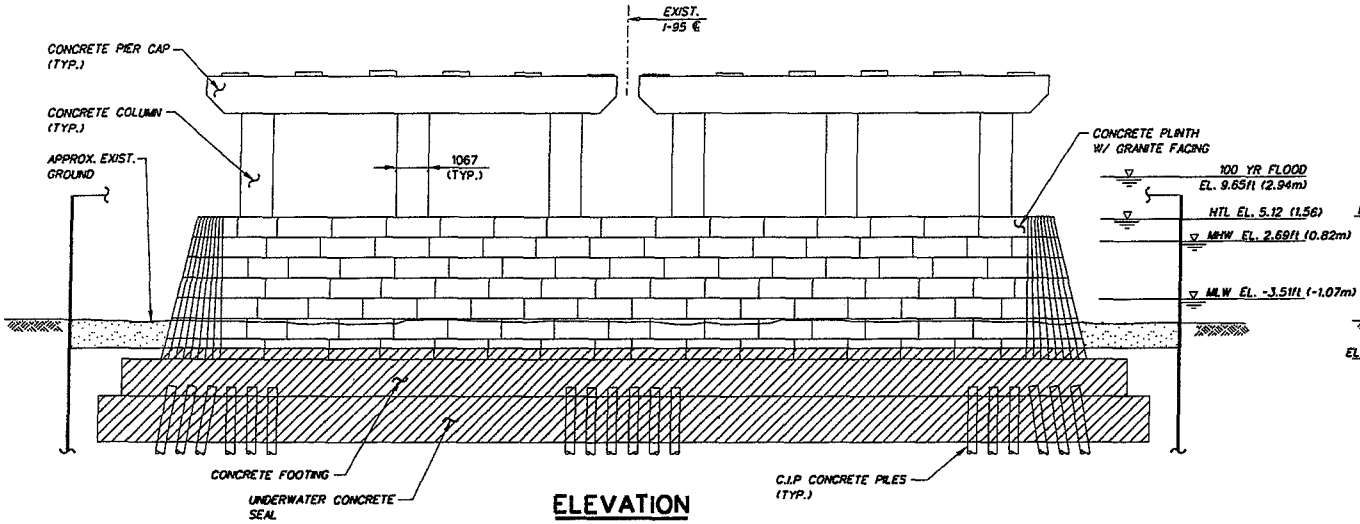

ELEVATION

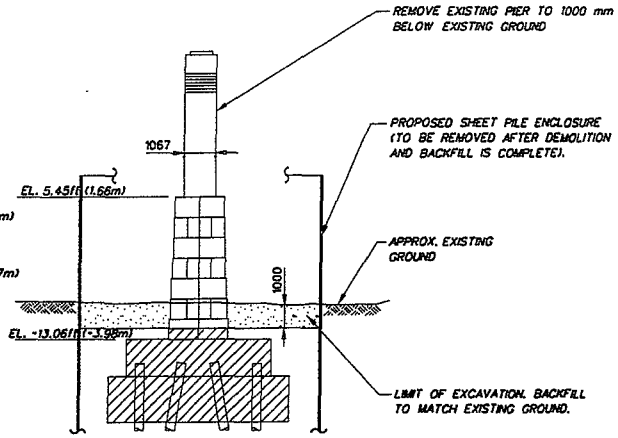

END VIEW

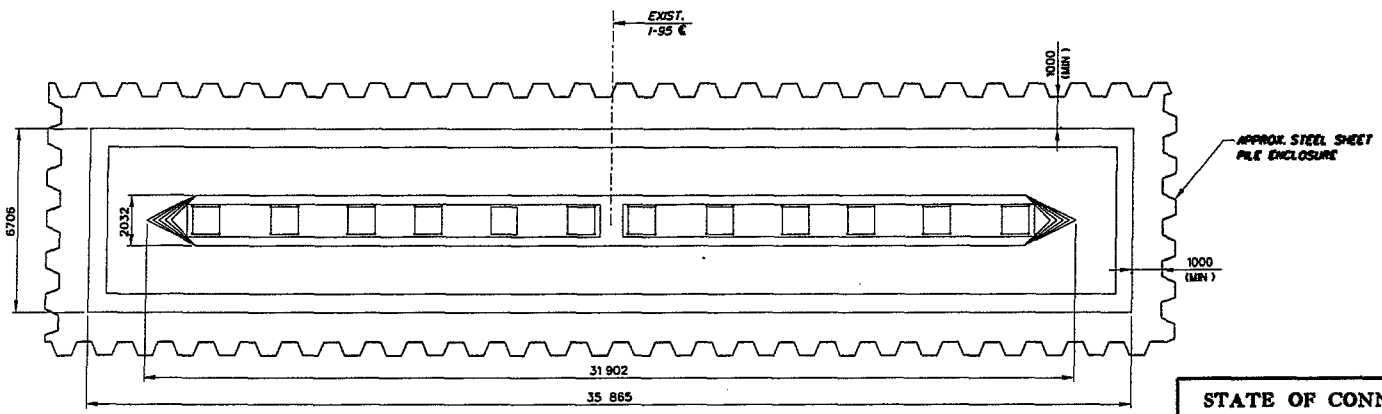

PLAN

NOTES:

1. THIS DRAWING SHOWS BASIC SIMPLIFIED PIER DETAILS ONLY.
2. CROSS-HATCHED AREAS SHOWN ON THIS DRAWING INDICATES EXISTING PIER COMPONENTS TO REMAIN. ALL OTHER PIER COMPONENTS TO BE REMOVED.
3. FOR 100 YEAR AND TIDAL WETLAND IMPACTS, SEE FIGURES 3 AND 8, RESPECTIVELY.

PIER REMOVAL SEQUENCE:

1. CONSTRUCT STEEL SHEET PILE ENCLOSURE, REMOVE OBSTRUCTIONS AS NECESSARY.
2. EXCAVATE WITHIN ENCLOSURE TO PIER REMOVAL ELEVATION. ALL MATERIAL EXCAVATED WITHIN THE ENCLOSURE SHALL BE REMOVED AND DISPOSED OF AT AN APPROVED UPLAND DISPOSAL SITE.
3. DEMOLISH REINFORCED CONCRETE PIER TO THE ELEVATION INDICATED. REMOVE ALL DEMOLITION DEBRIS.
4. BACKFILL TO RESTORE MUDLINE IN RIVER WITH "STRUCTURAL SOIL". "STRUCTURAL SOIL" IS SANDY LOAM, INCLUDING COARSE, FINE AND VERY FINE SANDY LOAM TO APPROXIMATE THE TEXTURAL CLASS OF EXISTING SOIL REMOVED FROM THIS AREA.
5. REMOVE STEEL SHEET PILE ENCLOSURE IN ITS ENTIRETY AFTER BACKFILL HAS BEEN COMPLETED AND ACCEPTED BY THE ENGINEER.

STATE OF CONNECTICUT - DEPARTMENT OF TRANSPORTATION

STATE PROJECT NO. 92-522

RECONSTRUCTION OF I-95 OVER WEST RIVER
NEW HAVEN-WEST HAVEN

FIG. NO.	IMPACT AREA TW-6 PIER REMOVAL DETAILS: PIERS 4 & 5	6/08
32		

8:58:33 AM 4/28/2009 H:\DGN\PB18735\FD\Highway\permit plates\Final 05 2007\W&TW\W&TW-33.dgn

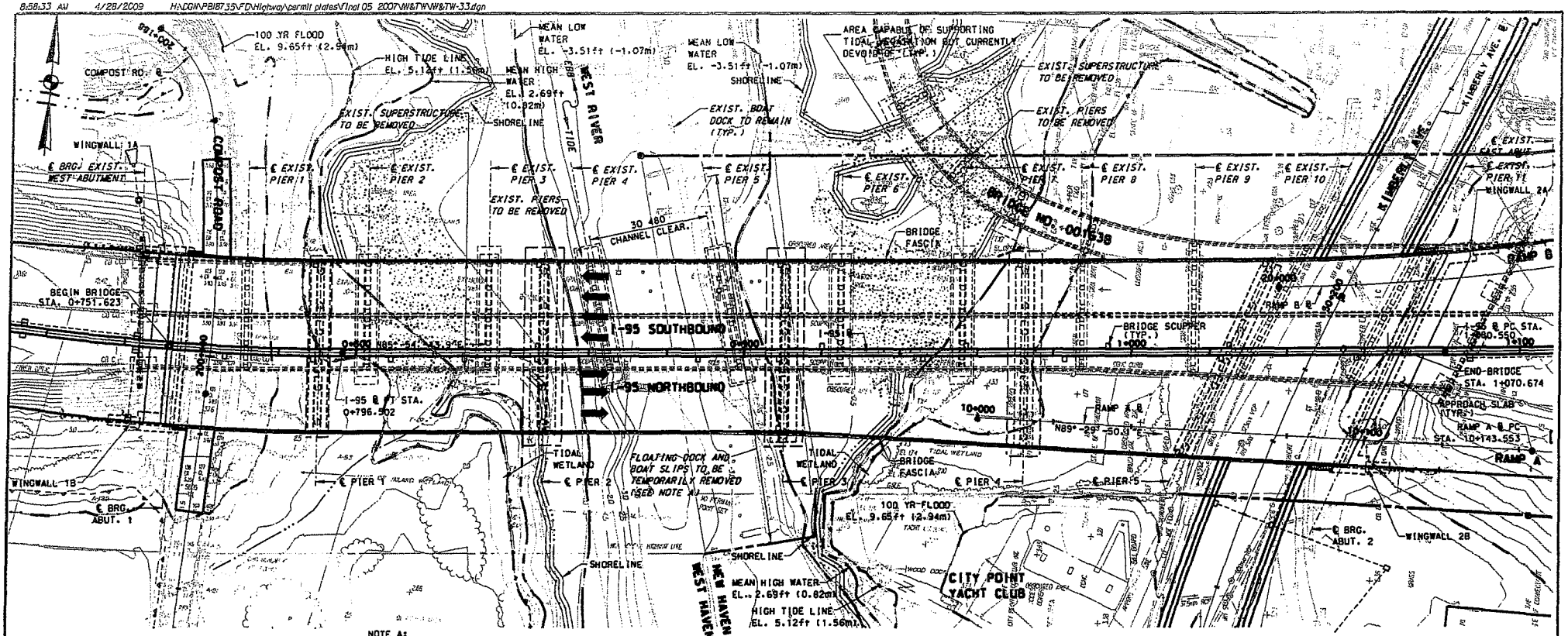

NOTE A:
FLOATING DOCKS AND BOAT SLIPS WITHIN LIMITS SHOWN TO BE TEMPORARILY REMOVED BY OTHERS. FOLLOWING CONSTRUCTION, DOCKS AND SLIPS TO BE RESTORED BY OTHERS.

PLAN

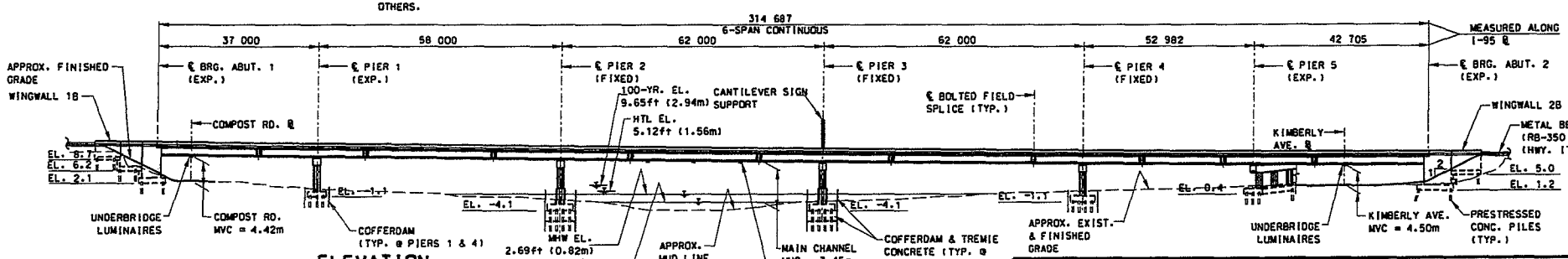

ELEVATION

NOTE:
MVC: MINIMUM VERTICAL CLEARANCE
MHW: MEAN HIGH WATER
MLW: MEAN LOW WATER
HTL: HIGH TIDE LINE

NOTE:
FOR TIDAL WETALND IMPACTS, SEE FIGURE 4 AND TABLE 1 IN THE REGULATED ACTIVITIES SECTION

SCALE IN METERS
0 20 40 60 80 100
SCALE 1:1500

LEGEND
MEAN LOW WATER LINE
HIGH TIDE LINE
100 YR FLOOD BOUNDARY
MEAN HIGH WATER LINE

WATER ELEVATIONS (NAVD 88)

DESCRIPTION	ELEVATION FT (M)
MEAN LOW WATER	-3.51 (-1.07)
MEAN HIGH WATER	2.69 (0.82)
HIGH TIDE LINE	5.12 (1.56)
100-YR. FLOODPLAIN (FEMA)	9.65 (2.94)

STATE OF CONNECTICUT - DEPARTMENT OF TRANSPORTATION

STATE PROJECT NO. 92-522

RECONSTRUCTION OF I-95 OVER WEST RIVER
NEW HAVEN-WEST HAVEN

FIG. NO.	IMPACT AREA TW-6 PROPOSED PLAN & ELEVATION	6/08
33		

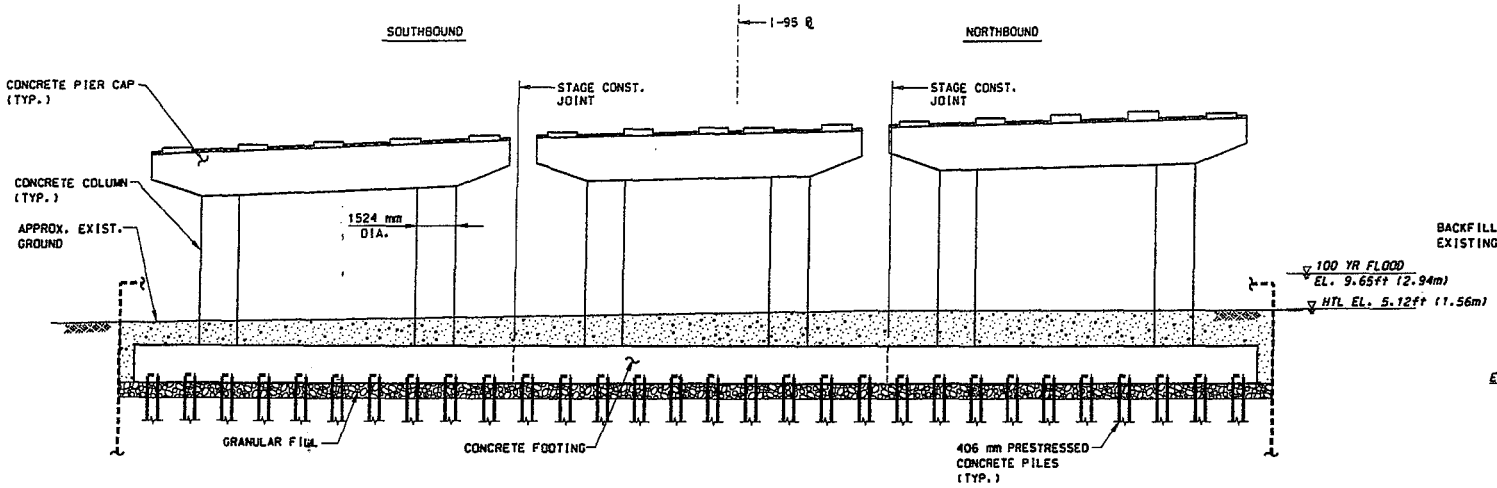

ELEVATION

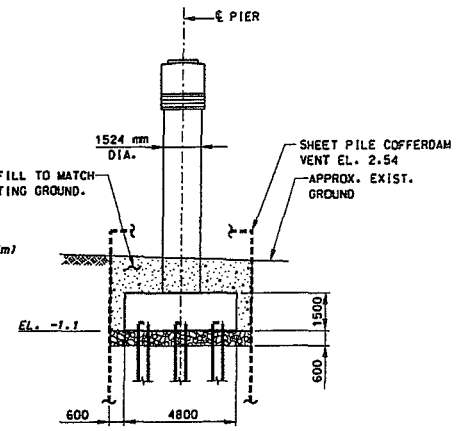

END VIEW

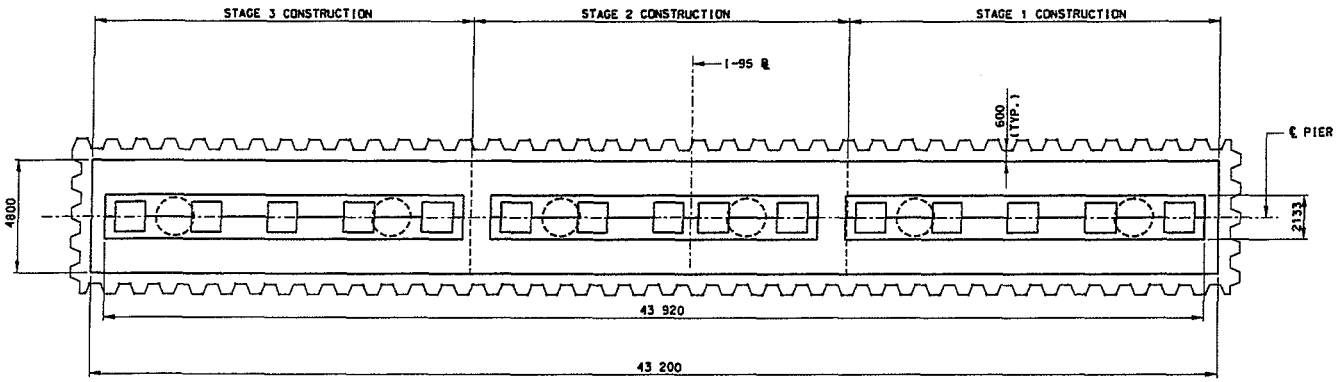

PLAN

NOTES:

1. THIS DRAWING SHOWS BASIC SIMPLIFIED PIER DETAILS ONLY.
2. FOR 100 YEAR AND TIDAL WETLAND IMPACTS, SEE FIGURES 3 AND 8, RESPECTIVELY.
3. BACKFILL IN VEGETATED WETLAND AREAS SHALL CONSIST OF NATURAL OR MANMADE PLANTING SUBSTRATE OR TOPSOIL, CONSISTING OF SOILS CONTAINING NOT LESS THAN 75% SAND BY WEIGHT AND AN ORGANIC CONTENT OF NOT LESS THAN 10% AND NOT MORE THAN 15%.

STATE OF CONNECTICUT - DEPARTMENT OF TRANSPORTATION		
STATE PROJECT NO. 92-522		
RECONSTRUCTION OF I-95 OVER WEST RIVER NEW HAVEN-WEST HAVEN		
FIG. NO. 34	IMPACT AREA TW-6 PROPOSED LAND PIER DETAILS: PIER 1	6/08

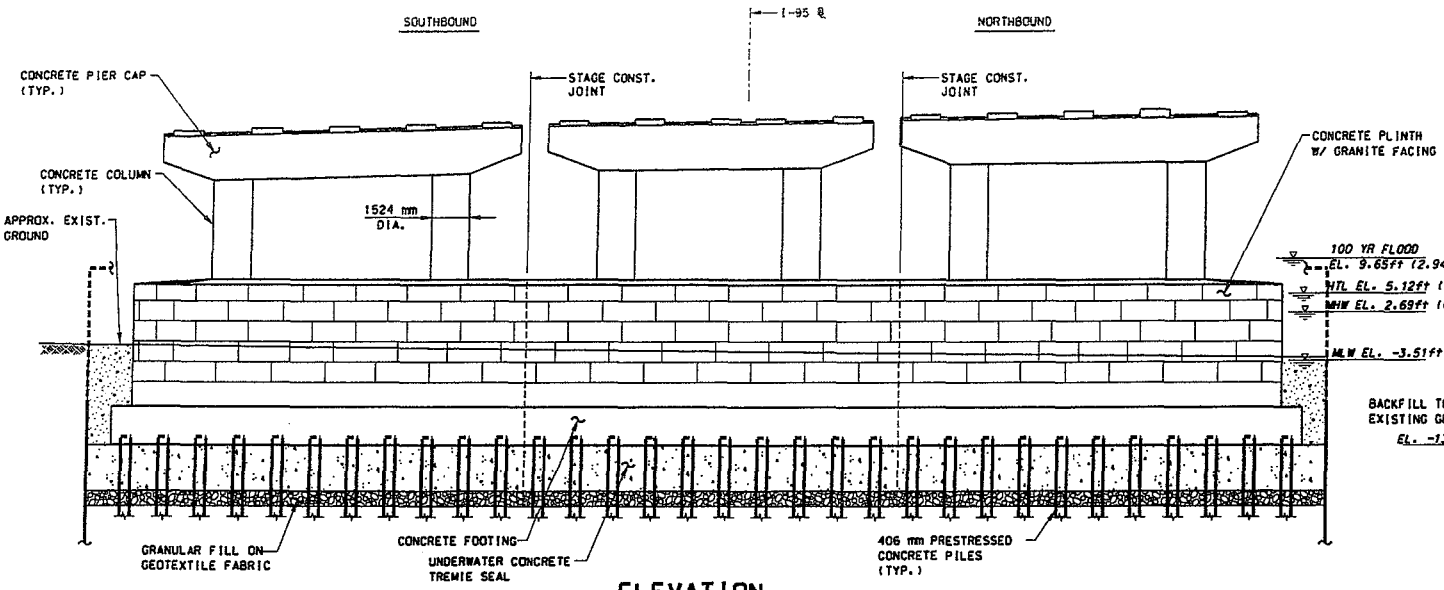

ELEVATION

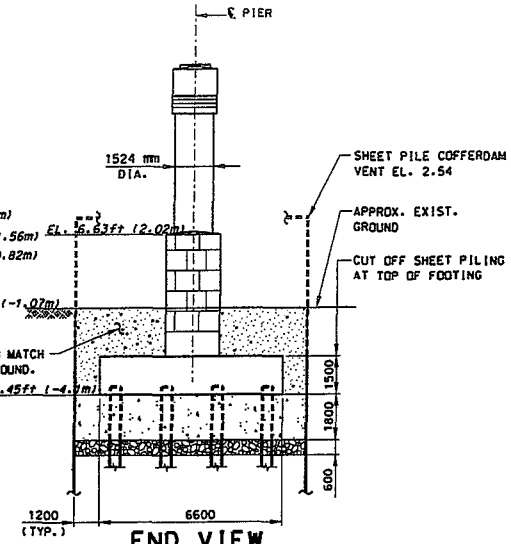

END VIEW

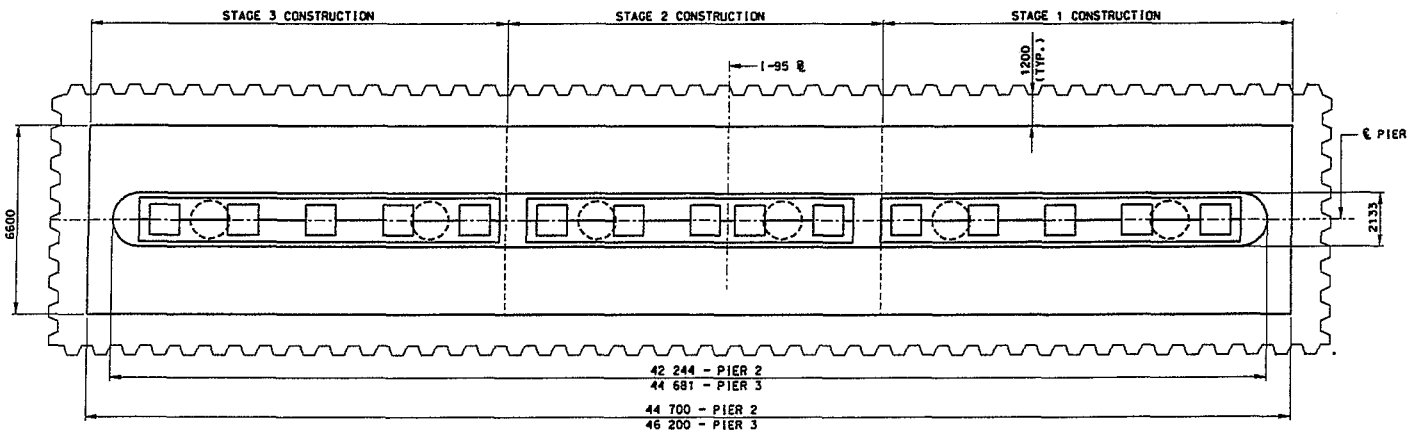

PLAN

NOTES:

1. THIS DRAWING SHOWS BASIC SIMPLIFIED PIER DETAILS ONLY.
2. FOR 100 YEAR AND TIDAL WETLAND IMPACTS, SEE FIGURES 3 AND 8, RESPECTIVELY.

PIER CONSTRUCTION SEQUENCE:

1. INSTALL STEEL SHEET PILES FOR COFFERDAM.
2. EXCAVATE WITHIN COFFERDAM TO BOTTOM OF GRANULAR FILL ELEVATION. EXCAVATED MATERIAL SHALL BE REMOVED AND DISPOSED OF AT AN APPROVED UPLAND DISPOSAL SITE.
3. PLACE GEOTEXTILE FABRIC AND GRANULAR FILL WITHIN COFFERDAM.
4. DRIVE PRESTRESSED CONCRETE PILES TO REQUIRED ELEVATION.
5. PLACE UNDERWATER CONCRETE TREMIE SEAL.
6. DEWATER COFFERDAM.
7. CONSTRUCT PROPOSED PIER.
8. BACKFILL THE TOP 1 METER TO RESTORE MUDLINE IN RIVER WITH "STRUCTURAL SOIL". "STRUCTURAL SOIL" IS SANDY LOAM, INCLUDING COARSE, FINE AND VERY FINE SANDY LOAM TO APPROXIMATE THE TEXTURAL CLASS OF EXISTING SOIL REMOVED FROM THIS AREA. BACKFILL EXCAVATIONS BELOW 1 METER WITH GRANULAR FILL.
9. REMOVE COFFERDAM TO TOP OF FOOTING.

STATE OF CONNECTICUT - DEPARTMENT OF TRANSPORTATION		
STATE PROJECT NO. 92-522		
RECONSTRUCTION OF I-95 OVER WEST RIVER NEW HAVEN-WEST HAVEN		
FIG. NO. 35	IMPACT AREA TW-6 PROPOSED RIVER PIER DETAILS PIERS 2 & 3	6/08

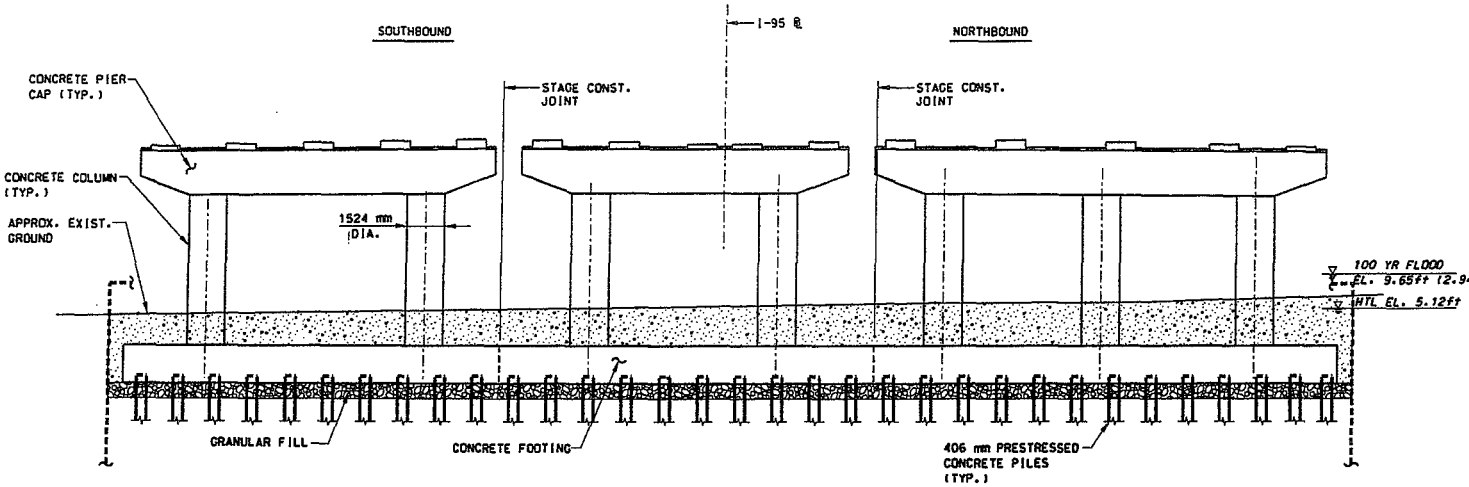

ELEVATION

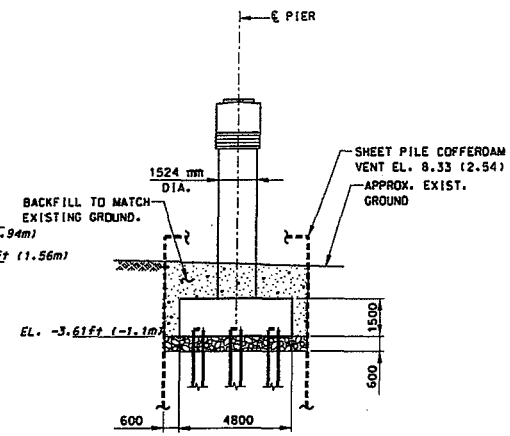

END VIEW

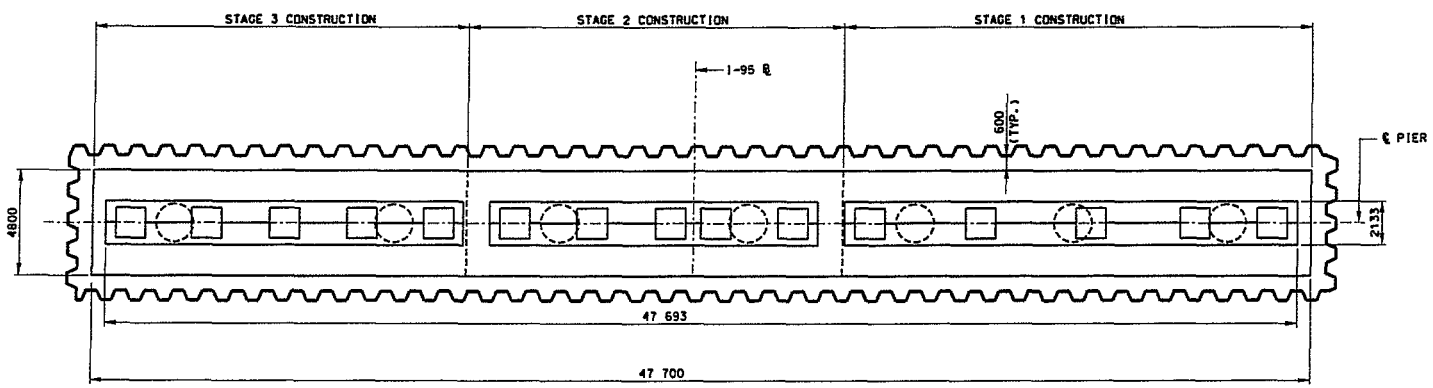

PLAN

NOTES:

1. THIS DRAWING SHOWS BASIC SIMPLIFIED PIER DETAILS ONLY.
2. FOR 100 YEAR AND TIDAL WETLAND IMPACTS, SEE FIGURES 3 AND 8, RESPECTIVELY.
3. BACKFILL IN VEGETATED WETLAND AREAS SHALL CONSIST OF NATURAL OR MANMADE PLANTING SUBSTRATE OR TOPSOIL, CONSISTING OF SOILS CONTAINING NOT LESS THAN 75% SAND BY WEIGHT AND AN ORGANIC CONTENT OF NOT LESS THAN 10% AND NOT MORE THAN 15%.

STATE OF CONNECTICUT - DEPARTMENT OF TRANSPORTATION		
STATE PROJECT NO. 92-522		
RECONSTRUCTION OF I-95 OVER WEST RIVER NEW HAVEN-WEST HAVEN		
FIG. NO. 36	IMPACT AREA TW-6 PROPOSED LAND PIER DETAILS: PIER 4	6/08

8:59:17 AM 4/28/2009 H:\DGN\PB18735\FD\Highway\permit plates\Final 05 2007\NW&TW\NW&TW-37.dgn

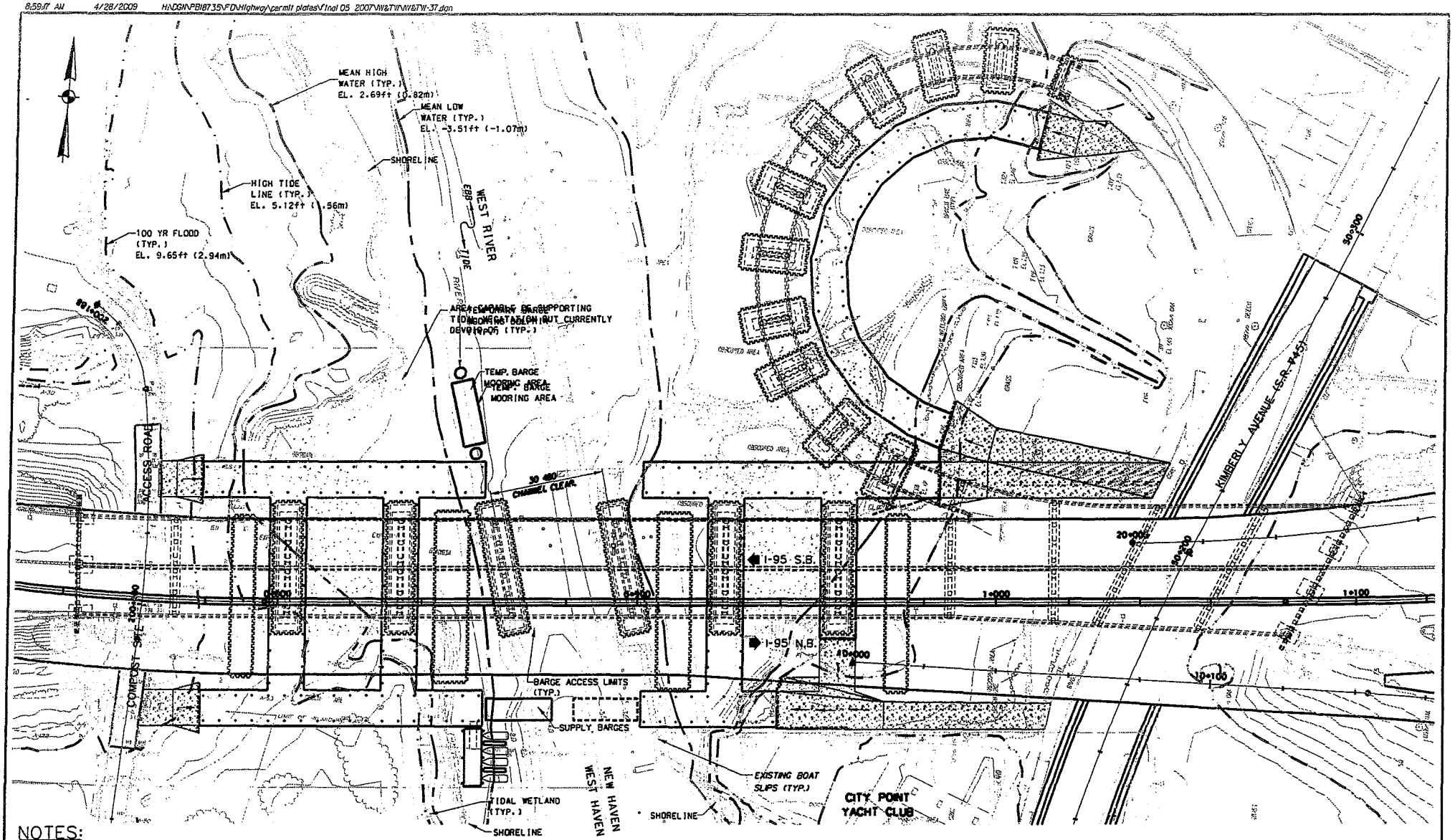

NOTES:

1. THE TEMPORARY TRESTLE IS TO BE USED TO PROVIDE ACCESS FOR THE CONSTRUCTION OF THE PROPOSED BRIDGE AND THE DEMOLITION OF THE EXISTING BRIDGE IN ORDER TO MINIMIZE IMPACTS TO THE EXISTING WETLANDS.
2. HATCHED AREA INDICATES LIMITS OF MINOR GRADING AND GRANULAR FILL FOR CONSTRUCTION ACCESS. THIS AREA SHALL BE RESTORED TO ITS ORIGINAL GRADE AT THE COMPLETION OF CONSTRUCTION.
3. BARGE ACCESS WILL BE RESTRICTED TO THE NAVIGATION CHANNEL ONLY. NO MORE THAN A SINGLE BARGE WILL BE ALLOWED IN THE CHANNEL AT ANY ONE TIME.
4. THE TEMPORARY TRESTLE SHALL BE REMOVED IN ITS ENTIRETY AT THE COMPLETION OF CONSTRUCTION. SEE FIGURE 4 AND TABLE 1 IN THE REGULATED ACTIVITIES SECTION FOR TEMPORARY IMPACTS.

PLAN

LEGEND

MEAN LOW WATER LINE	
HIGH TIDE LINE	
100 YR FLOOD BOUNDARY	
MEAN HIGH WATER LINE	

SCALE IN METERS

0 20 40 60 80 100

SCALE 1:1500

STATE OF CONNECTICUT - DEPARTMENT OF TRANSPORTATION

STATE PROJECT NO. 92-522

RECONSTRUCTION OF I-95 OVER WEST RIVER
NEW HAVEN-WEST HAVEN

FIG. NO.	IMPACT AREA TW-5 & TW-6 PROPOSED TRESTLE PLAN	6/08
37		

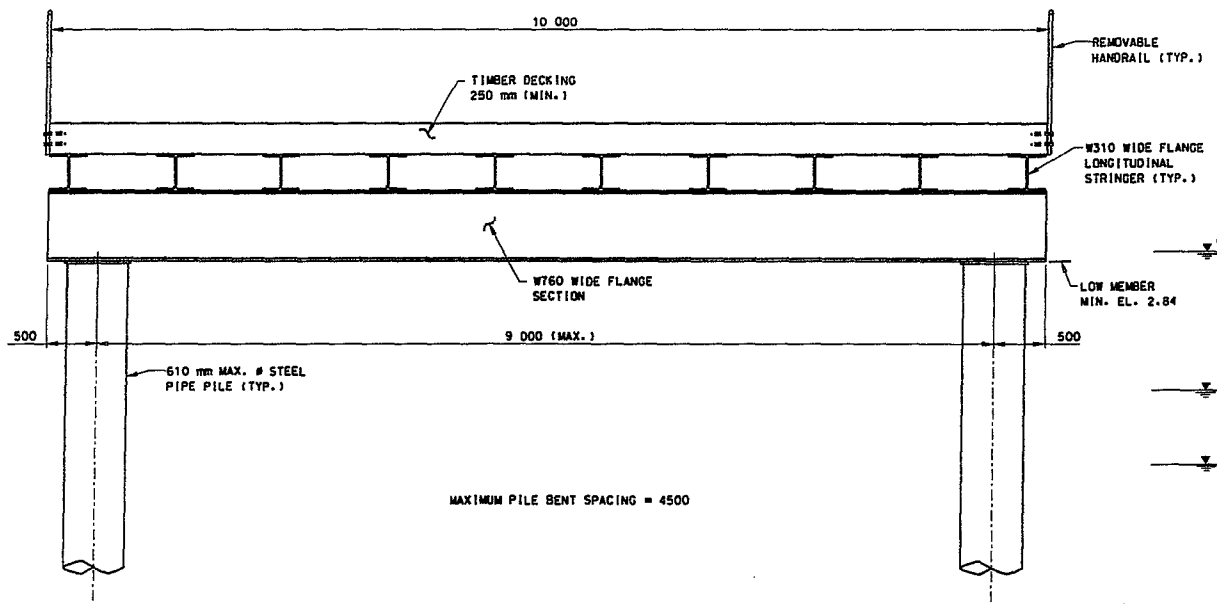

SECTION THRU TRESTLE

SCALE: 1:250

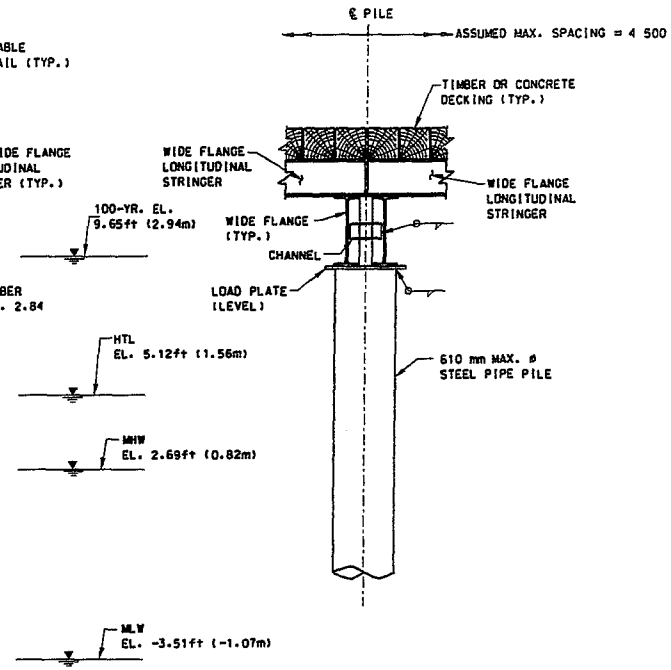

SECTION PIPE PILE BENT

SCALE: 1:250

TRESTLE DESIGN CRITERIA:

1. ASSUMED DESIGN CRANE: MANITOWOC MODEL 777 - 1555 kn LIFT CRANE
   - CRAWLER TRACK LENGTH = 7.6 m
   - CRAWLER TRACK WIDTH = 1.0 m
   - OUT TO OUT WIDTH = 6.3 m
2. CRANE ON TRESTLE (WITH BOOM, COUNTERWEIGHTS AND A 500 kn MAX. HOIST LOAD) = 1820 kn

THE INFORMATION SHOWN ON THIS DRAWING, INCLUDING (AS APPLICABLE) SIZES OF MEMBERS, THE SEQUENCE OF CONSTRUCTION, AND ERECTION PROCEDURES CONVEYS THE ASSUMPTIONS MADE BY THE DESIGNER IN DESIGNING THE STRUCTURE, AND IS FOR INFORMATIONAL USE ONLY. THE CONTRACTOR SHALL BE RESPONSIBLE FOR SELECTING THE MEANS AND METHODS FOR CONSTRUCTION. THE CONTRACTOR SHALL ALSO SUBMIT INFORMATION INCLUDING DESIGN CALCULATIONS, CONSTRUCTION SCHEMATICS, AND CONSTRUCTION SEQUENCES AND PROCEDURES TO THE ENGINEER FOR REVIEW.

STATE OF CONNECTICUT - DEPARTMENT OF TRANSPORTATION		
STATE PROJECT NO. 92-522		
RECONSTRUCTION OF I-95 OVER WEST RIVER NEW HAVEN-WEST HAVEN		
FIG. NO. 38	IMPACT AREA TW-5 & TW-6 PROPOSED TRESTLE DETAILS-1	6/08

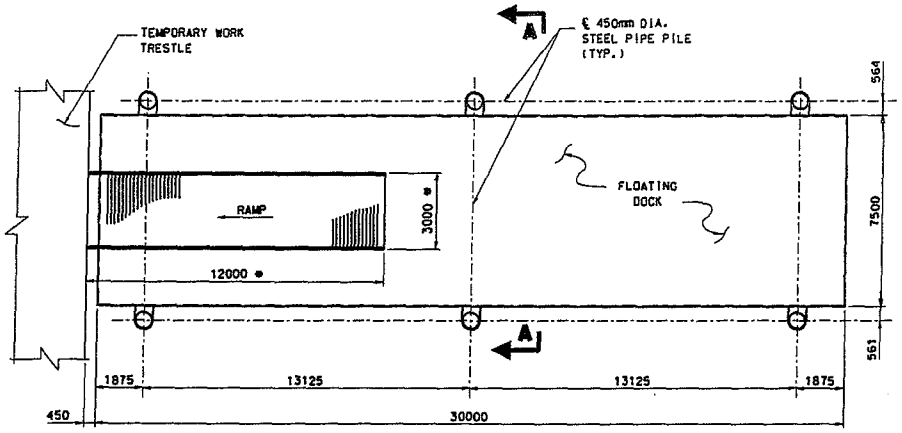

PLAN

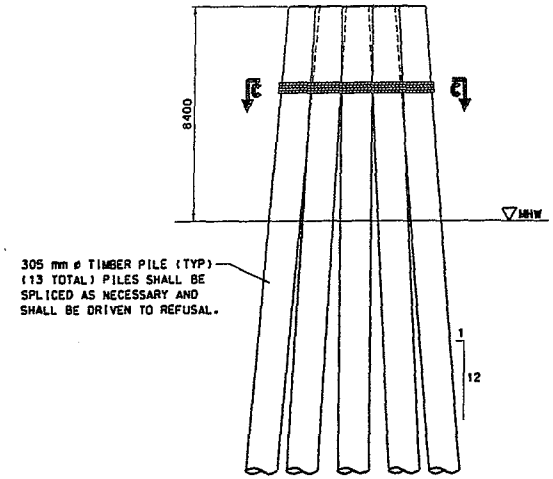

ELEVATION

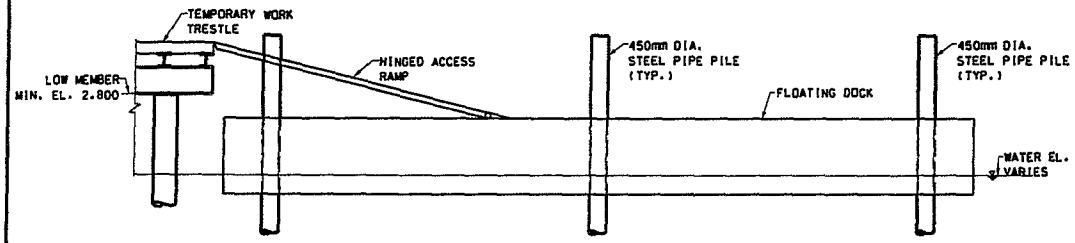

SECTION B-B

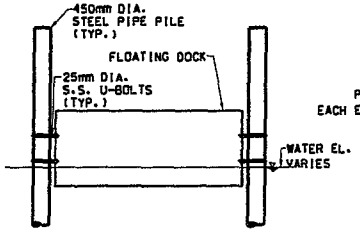

SECTION A-A

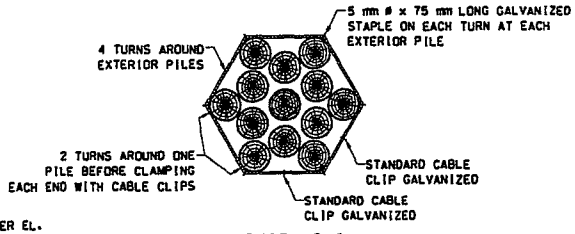

SECTION C-C

MOORING DETAILS

FLOATING RAMP DETAILS

STATE OF CONNECTICUT - DEPARTMENT OF TRANSPORTATION		
STATE PROJECT NO. 92-522		
RECONSTRUCTION OF I-95 OVER WEST RIVER NEW HAVEN-WEST HAVEN		
FIG. NO. 39	IMPACT AREA TW-5 & TW-6 PROPOSED TRESTLE DETAILS-2	6/08

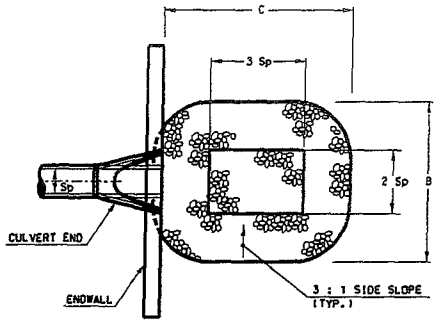

PLAN

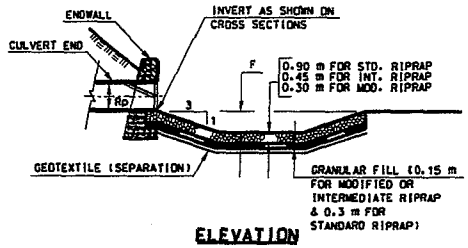

ELEVATION

PREFORMED SCOUR HOLE TYPE I DETAIL

PREFORMED SCOUR HOLE DIMENSION TABLE						
℄ LOCATION	RIPRAP TYPE	B (METERS)	C (METERS)	2Sp (METERS)	3Sp (METERS)	F (METERS)
RAMP B STA. 20+143 14.6 m LT.	MODIFIED	1.5	1.8	0.6	0.9	0.2
ELLA T. GRASSO BLVD. STA. 10+359 19.4 m RT.	MODIFIED	4.6	5.5	1.8	2.7	0.5
ELLA T. GRASSO BLVD. STA. 10+361 22.5 m RT.						
ELLA T. GRASSO BLVD. STA. 10+267 95.6 m RT.	MODIFIED	6.1	7.3	2.4	3.6	0.6
I-95 STA. 1+900 66.8 m RT.	MODIFIED	4.6	5.5	1.8	2.7	0.5

DRAINAGE DETAILS

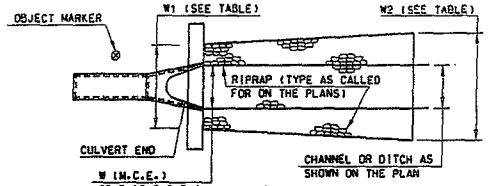

PLAN

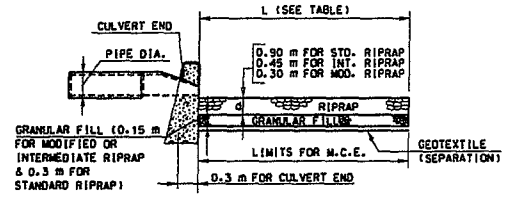

ELEVATION

TYPE A & B RIPRAP APRON DETAIL

TYPE A & B RIPRAP APRON DIMENSION TABLE					
		TYPE B RIPRAP APRON			
℄ LOCATION	RIPRAP TYPE	L (METERS)	W1 (METERS)	W2 (METERS)	d (METERS)
I-95 STA. 0+529 41.4 m LT.	MODIFIED	3.0	1.2	2.4	0.30
I-95 STA. 0+631 46.9 m LT.	MODIFIED	3.0	1.2	2.4	0.30
I-95 STA. 0+737 45.0 m LT.	MODIFIED	3.6	1.5	3.0	0.30
I-95 STA. 1+180 30.2 m RT.	MODIFIED	4.5	1.8	3.6	0.30
RAMP A STA. 10+224 5.0 m LT.	MODIFIED	3.0	0.9	2.1	0.30
ELLA T. GRASSO BLVD. STA. 10+044 40.8 m RT.	MODIFIED	4.8	1.8	3.9	0.30

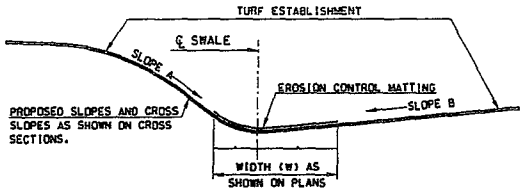

SLOPE A	SLOPE B	A	B
1:6	1:2	$(\frac{6}{6+2})W$	$(\frac{2}{6+2})W$
1:6	1:6	$(\frac{6}{6+6})W$	$(\frac{6}{6+6})W$
1:12	1:4	$(\frac{12}{12+4})W$	$(\frac{4}{12+4})W$
1:4	1:4	$(\frac{4}{4+4})W$	$(\frac{4}{4+4})W$

TYPICAL GRASS SWALE WITH EROSION CONTROL MATTING

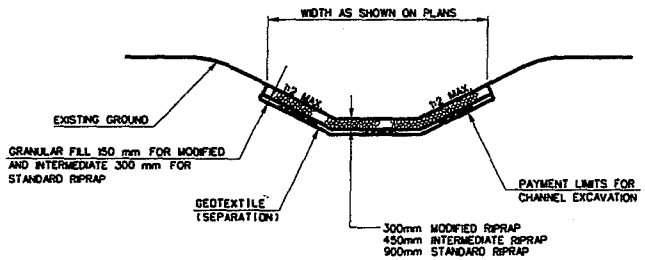

TYPICAL RIPRAP SWALE

STATE OF CONNECTICUT - DEPARTMENT OF TRANSPORTATION

STATE PROJECT NO. 92-522

RECONSTRUCTION OF I-95 OVER WEST RIVER
NEW HAVEN-WEST HAVEN

FIG. NO. 40	MISCELLANEOUS DRAINAGE DETAILS	6/08

9:00:05 AM 4/28/2009 H:\DGN\PB187J5\FD\Highway\permit plates\Final 05 2007\W&T\W&TW-41.dgn

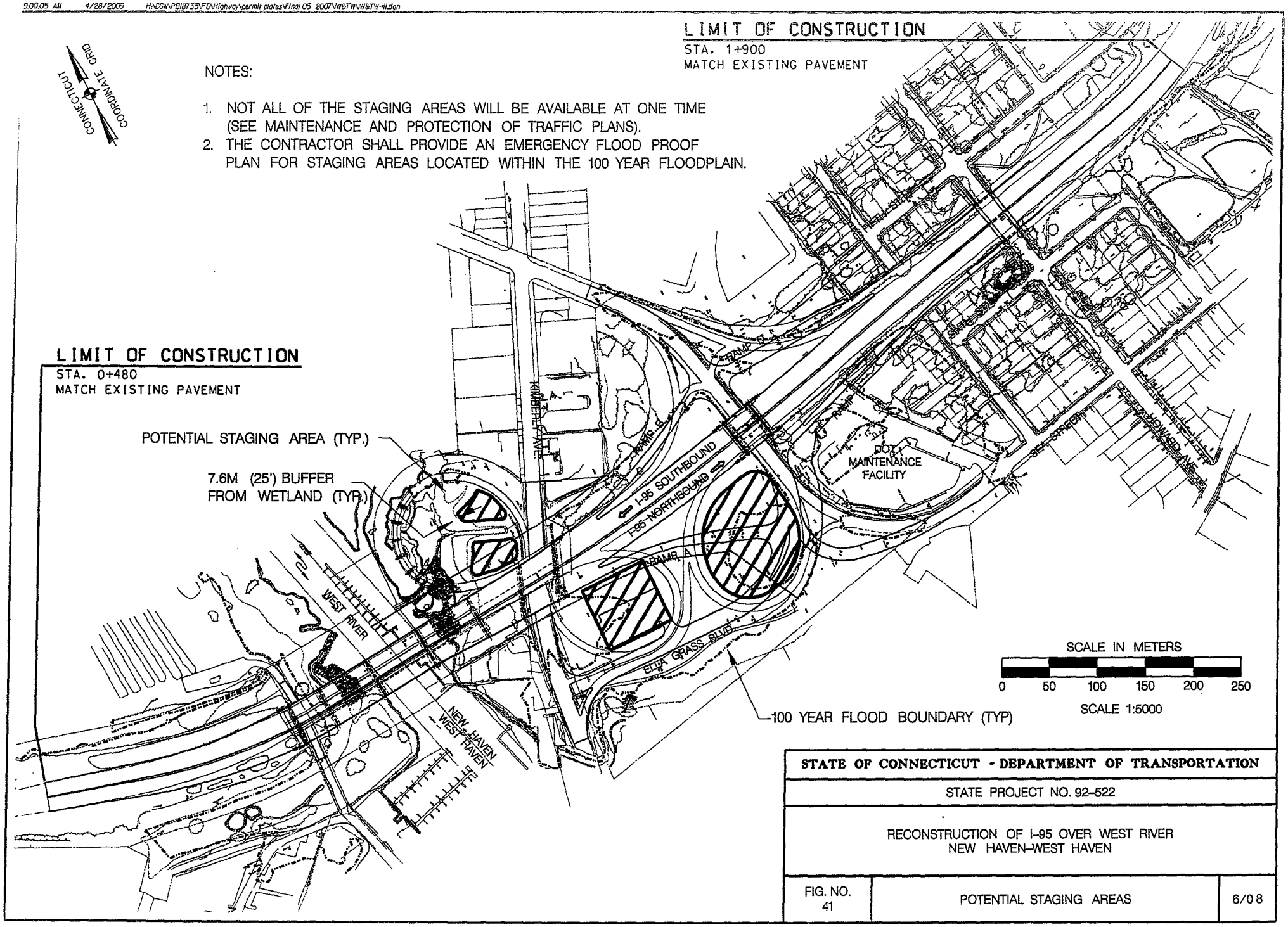

STATE OF CONNECTICUT - DEPARTMENT OF TRANSPORTATION		
STATE PROJECT NO. 92-522		
RECONSTRUCTION OF I-95 OVER WEST RIVER NEW HAVEN-WEST HAVEN		
FIG. NO. 41	POTENTIAL STAGING AREAS	6/08

9:00a9 AM 4/28/2009 H:\DGN\PB187.35\FD\Highway\permit plates\Final 05 2007\NW&TW\NW&TW-42.dgn

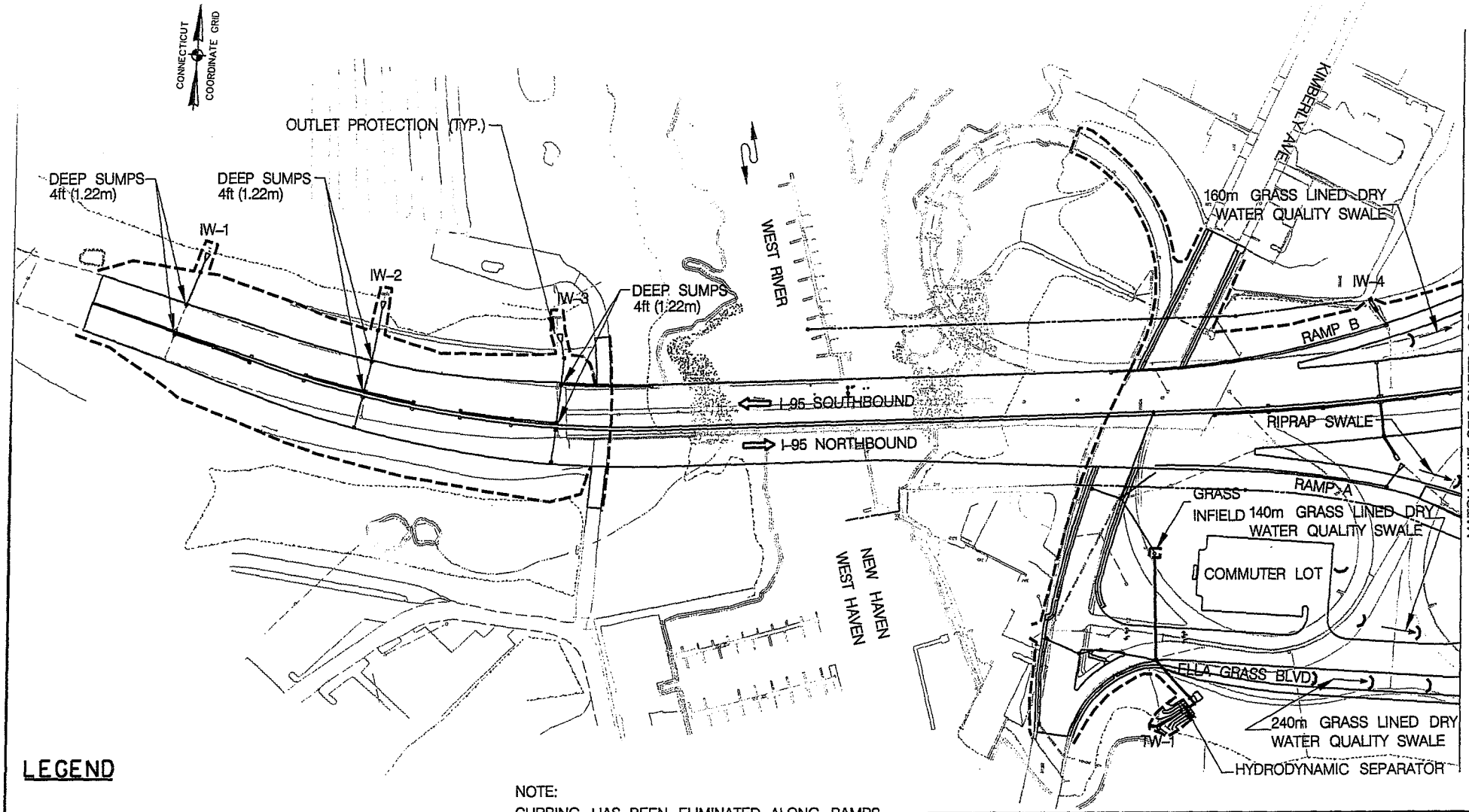

LEGEND

- - - - - SEDIMENTATION CONTROL SYSTEM (S.C.S.)

← DIRECTION OF FLOW

CHECK DAM

—Ⓕ—Ⓒ— APPROX. CUT OR FILL LIMIT

NOTE:
CURBING HAS BEEN ELIMINATED ALONG RAMPS A, B AND D, THE COMMUTER LOT AND ALONG I-95 ADJACENT TO THE RAMP INFIELD AREAS

SCALE IN METERS

0 30 60 90 120 150

SCALE 1:3000

STATE OF CONNECTICUT - DEPARTMENT OF TRANSPORTATION		
STATE PROJECT NO. 92-522		
RECONSTRUCTION OF I-95 OVER WEST RIVER NEW HAVEN-WEST HAVEN		
FIG. NO. 42	PRETREATMENT MEASURES (1 OF 2)	6/08

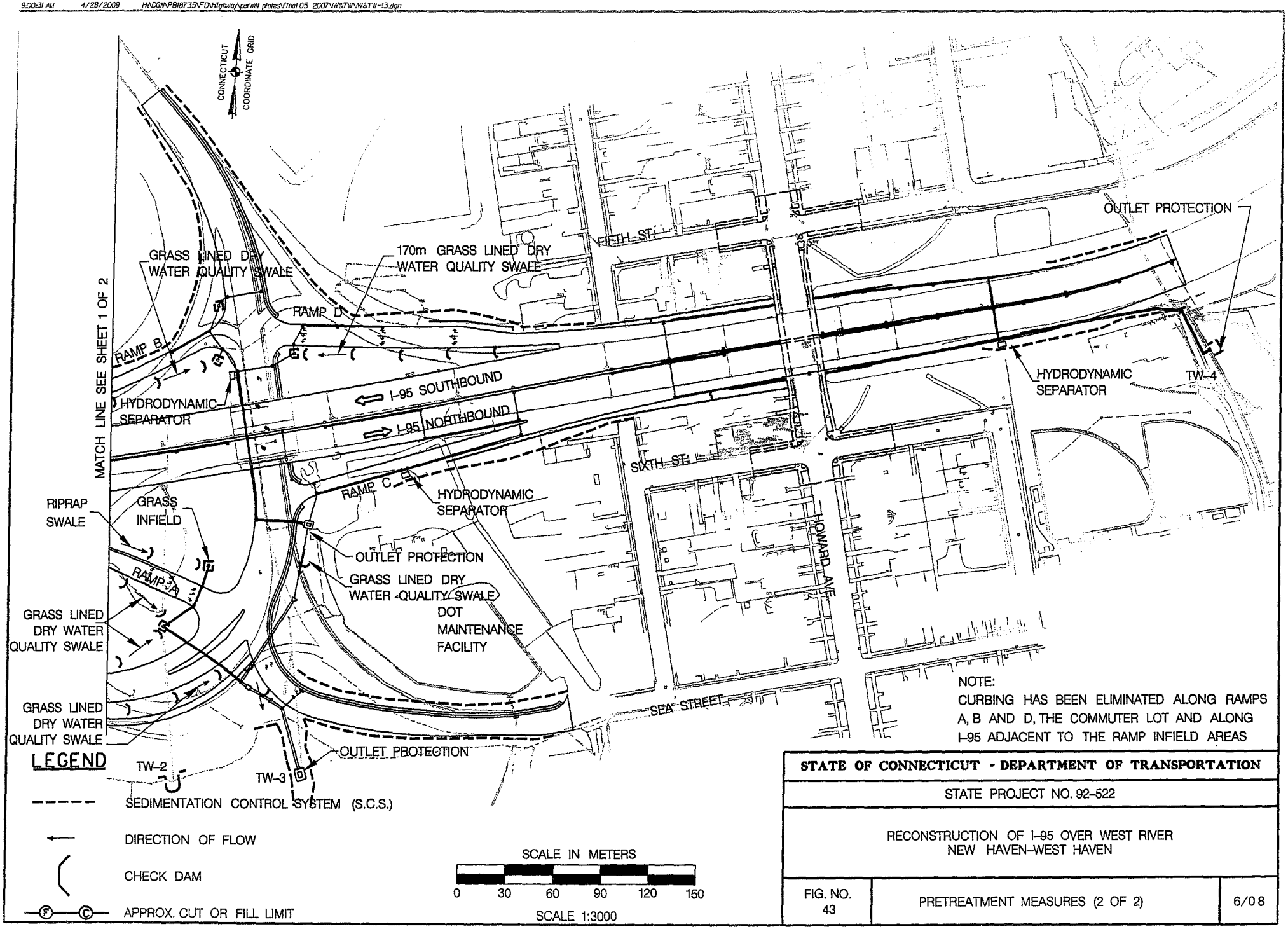

NOTE:
CURBING HAS BEEN ELIMINATED ALONG RAMPS A, B AND D, THE COMMUTER LOT AND ALONG I-95 ADJACENT TO THE RAMP INFIELD AREAS

STATE OF CONNECTICUT - DEPARTMENT OF TRANSPORTATION		
STATE PROJECT NO. 92-522		
RECONSTRUCTION OF I-95 OVER WEST RIVER NEW HAVEN-WEST HAVEN		
FIG. NO. 43	PRETREATMENT MEASURES (2 OF 2)	6/08

9:23:08 AM 4/28/2009 H:\CGN\PB18735\FD\Highway\permit plates\Final 05 2007\W&T\WEG IW-44.dgn

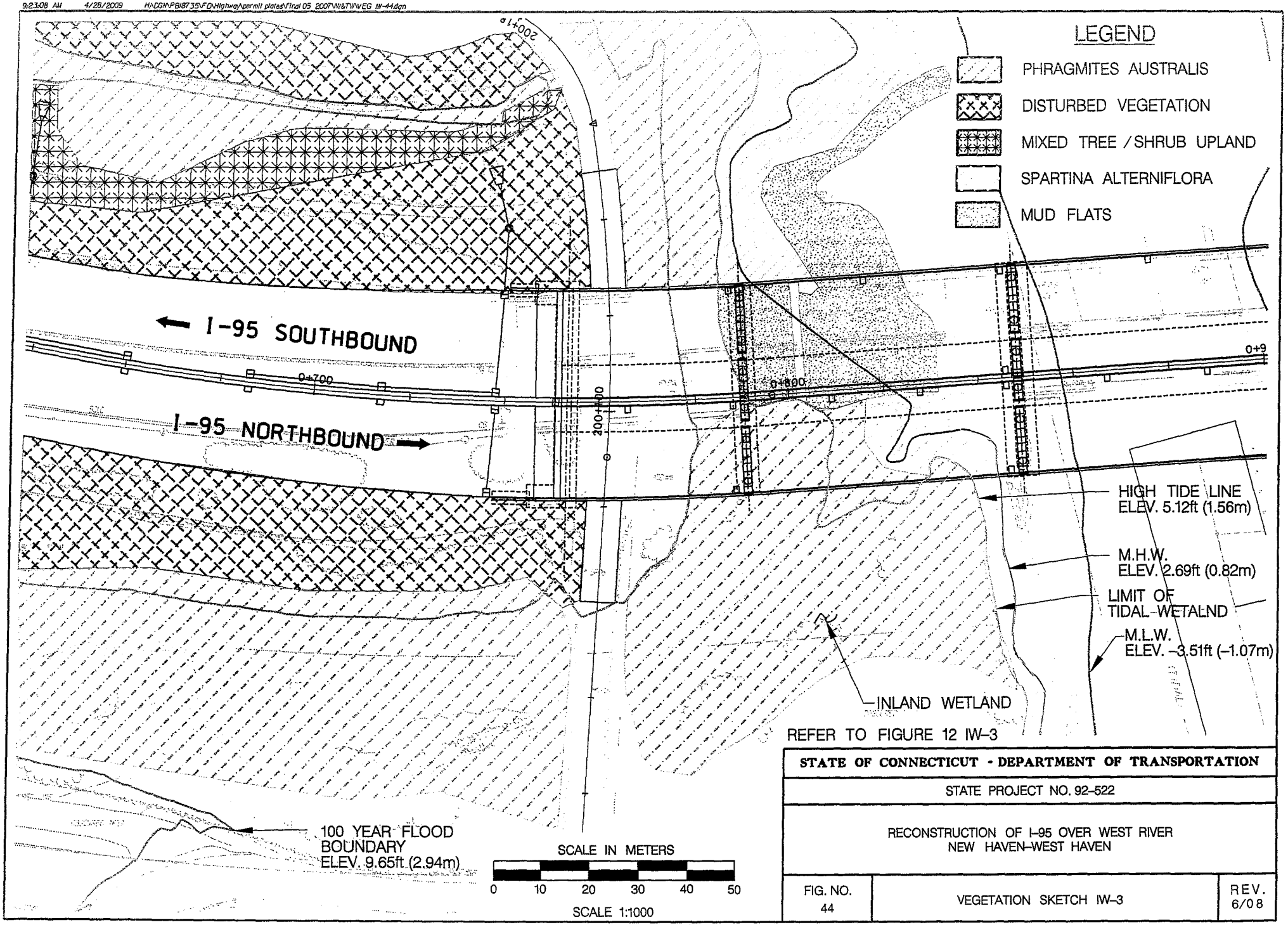

STATE OF CONNECTICUT - DEPARTMENT OF TRANSPORTATION		
STATE PROJECT NO. 92-522		
RECONSTRUCTION OF I-95 OVER WEST RIVER NEW HAVEN-WEST HAVEN		
FIG. NO. 44	VEGETATION SKETCH IW-3	REV. 6/08

9:22:59 AM 4/28/2009 H:\DGN\PB\87735\FD\Highway\permit plates\Final 05 2007\W&T\VEG IW-45.dgn

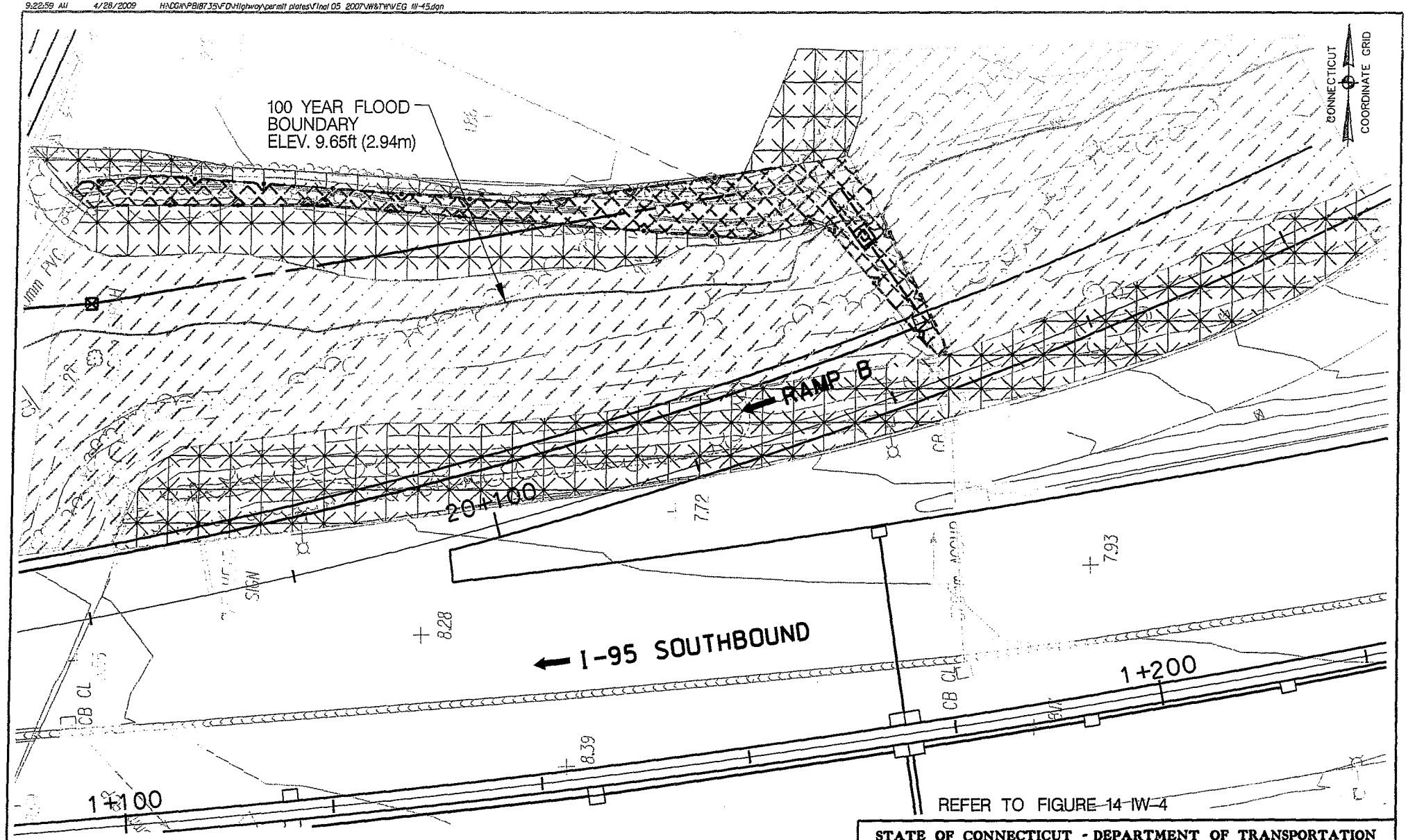

LEGEND

- PHRAGMITES AUSTRALIS
- DISTURBED VEGETATION
- MIXED TREE / SHRUB UPLAND

SCALE IN METERS

0 5 10 15 20 25

SCALE 1:500

STATE OF CONNECTICUT - DEPARTMENT OF TRANSPORTATION		
STATE PROJECT NO. 92-522		
RECONSTRUCTION OF I-95 OVER WEST RIVER NEW HAVEN-WEST HAVEN		
FIG. NO. 45	VEGETATION SKETCH IW-4	6/08

9:22:50 AM 4/28/2009 H:\CGN\PB18735\FD\Highway\permit plates\Final 05 2007\W&T\WVEG IW-46.dgn

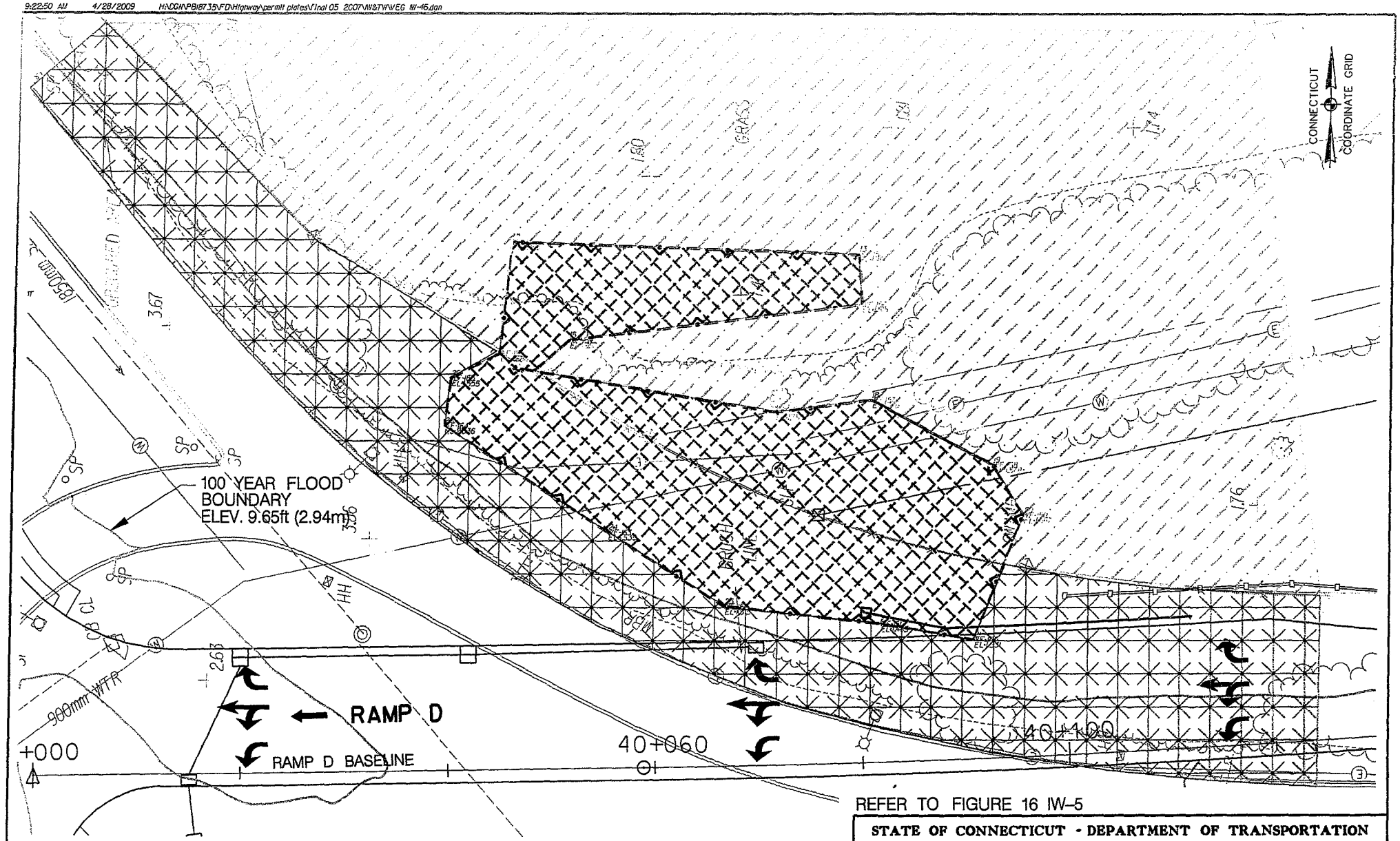

REFER TO FIGURE 16 IW-5

STATE OF CONNECTICUT - DEPARTMENT OF TRANSPORTATION		
STATE PROJECT NO. 92-522		
RECONSTRUCTION OF I-95 OVER WEST RIVER NEW HAVEN-WEST HAVEN		
FIG. NO. 46	VEGETATION SKETCH IW-5	6/08

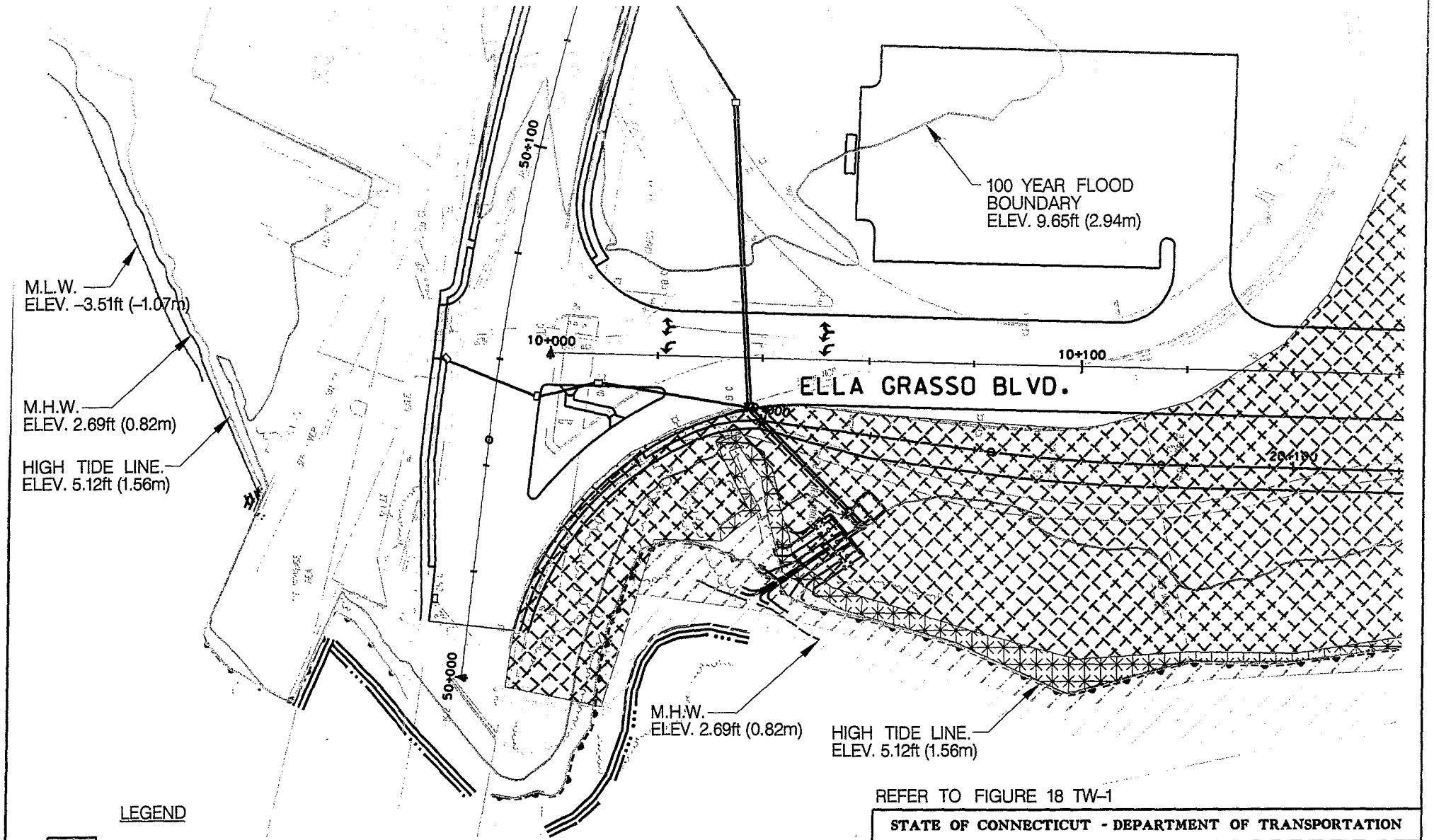

REFER TO FIGURE 18 TW-1

LEGEND

- PHRAGMITES AUSTRALIS
- DISTURBED VEGETATION
- MIXED TREE / SHRUB UPLAND
- SPARTINA ALTERNIFLORA

SCALE IN METERS

0 10 20 30 40 50

SCALE 1:1000

STATE OF CONNECTICUT - DEPARTMENT OF TRANSPORTATION		
STATE PROJECT NO. 92-522		
RECONSTRUCTION OF I-95 OVER WEST RIVER NEW HAVEN-WEST HAVEN		
FIG. NO. 47	VEGETATION SKETCH TW-1	608

9:22:30 AM 4/28/2009 H:\DGN\PB18735\FD\Highway\permit plates\Final 05 2007\W&T\VEG TW-48.dgn

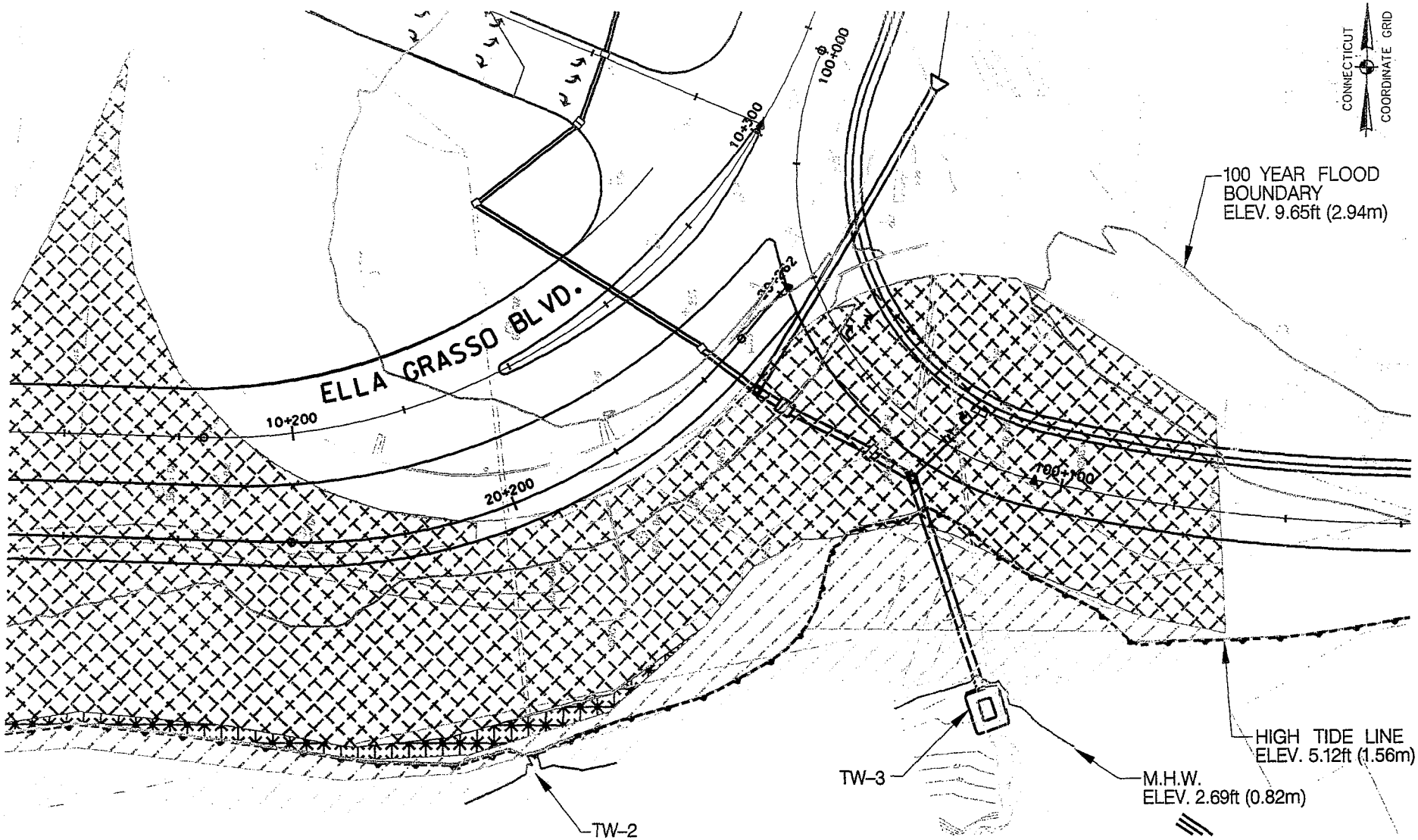

REFER TO FIGURE 20 (TW-2) AND FIGURE 22 (TW-3)

LEGEND

- PHRAGMITES AUSTRALIS
- DISTURBED VEGETATION
- MIXED TREE / SHRUB UPLAND
- SPARTINA ALTERNIFLORA

SCALE IN METERS

0 10 20 30 40 50

SCALE 1:1000

STATE OF CONNECTICUT - DEPARTMENT OF TRANSPORTATION		
STATE PROJECT NO. 92-522		
RECONSTRUCTION OF I-95 OVER WEST RIVER NEW HAVEN-WEST HAVEN		
FIG. NO. 48	VEGETATION SKETCH TW-2 AND TW-3	6/08

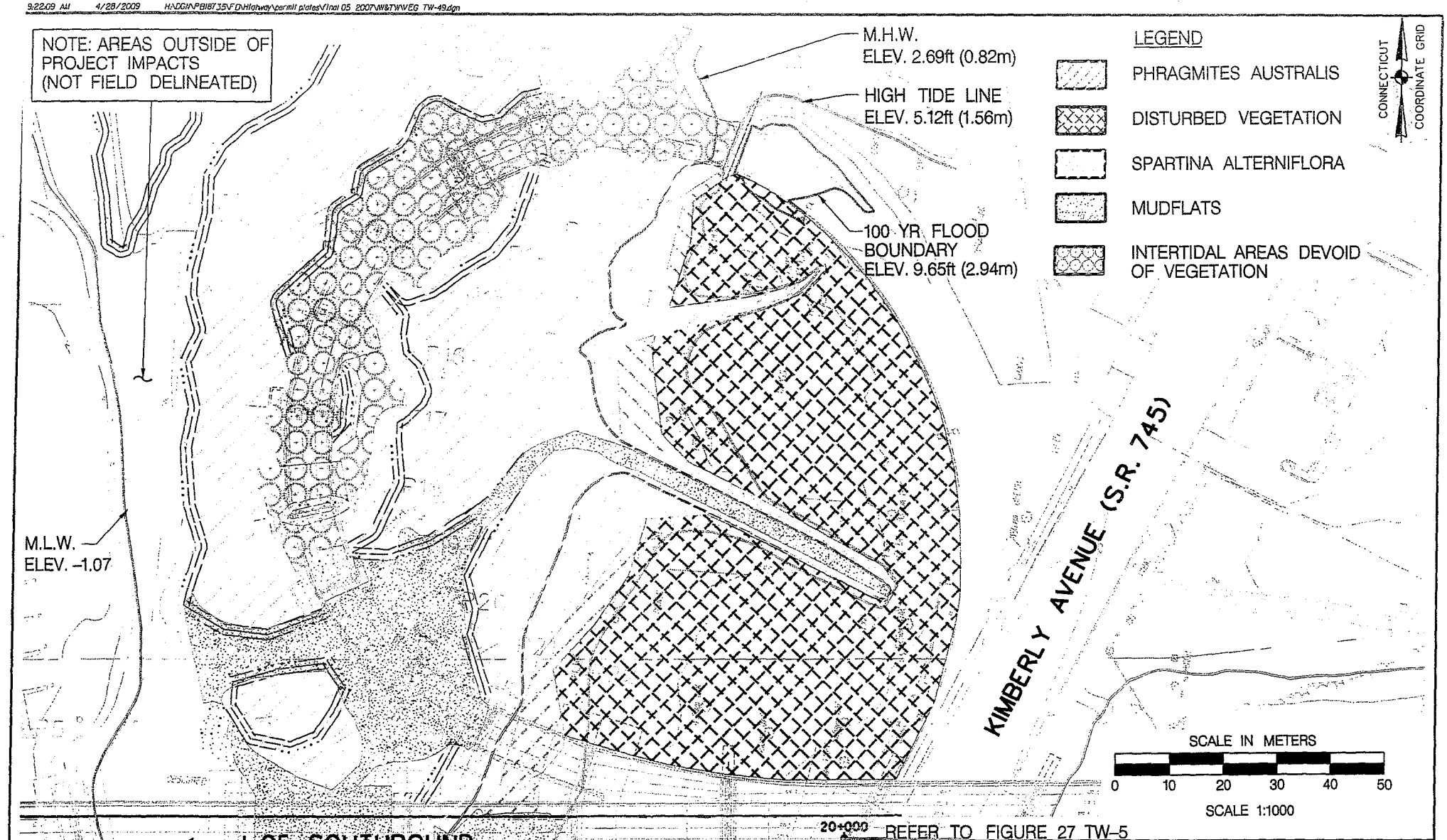

STATE OF CONNECTICUT - DEPARTMENT OF TRANSPORTATION

STATE PROJECT NO. 92-522

RECONSTRUCTION OF I-95 OVER WEST RIVER
NEW HAVEN-WEST HAVEN

FIG. NO.	VEGETATION SKETCH TW-5	REV.
49		6/08

9:25:02 AM 4/28/2009 H:\DGN\PB18735\FD\Highway\permit plates\Final 05 2007\W&TW\VEG TW-50.dgn

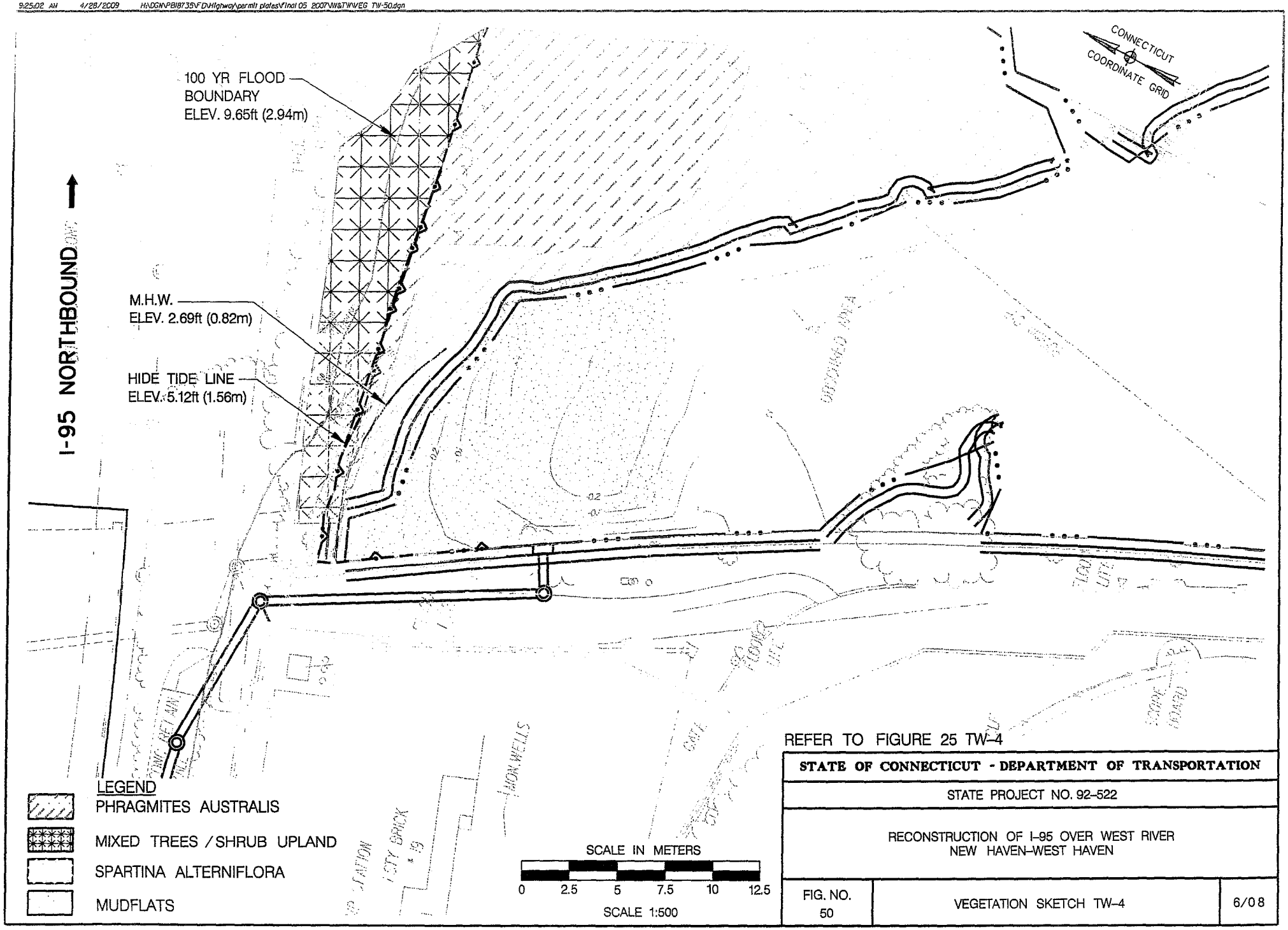

REFER TO FIGURE 25 TW-4

STATE OF CONNECTICUT - DEPARTMENT OF TRANSPORTATION		
STATE PROJECT NO. 92-522		
RECONSTRUCTION OF I-95 OVER WEST RIVER NEW HAVEN-WEST HAVEN		
FIG. NO. 50	VEGETATION SKETCH TW-4	6/08

9:5:25 AM 4/28/2009 H:\DGN\PB18735\FD\Highway\permit plates\Final 05 2007\Nt$TN\Mitigation Plan Area 1.dgn

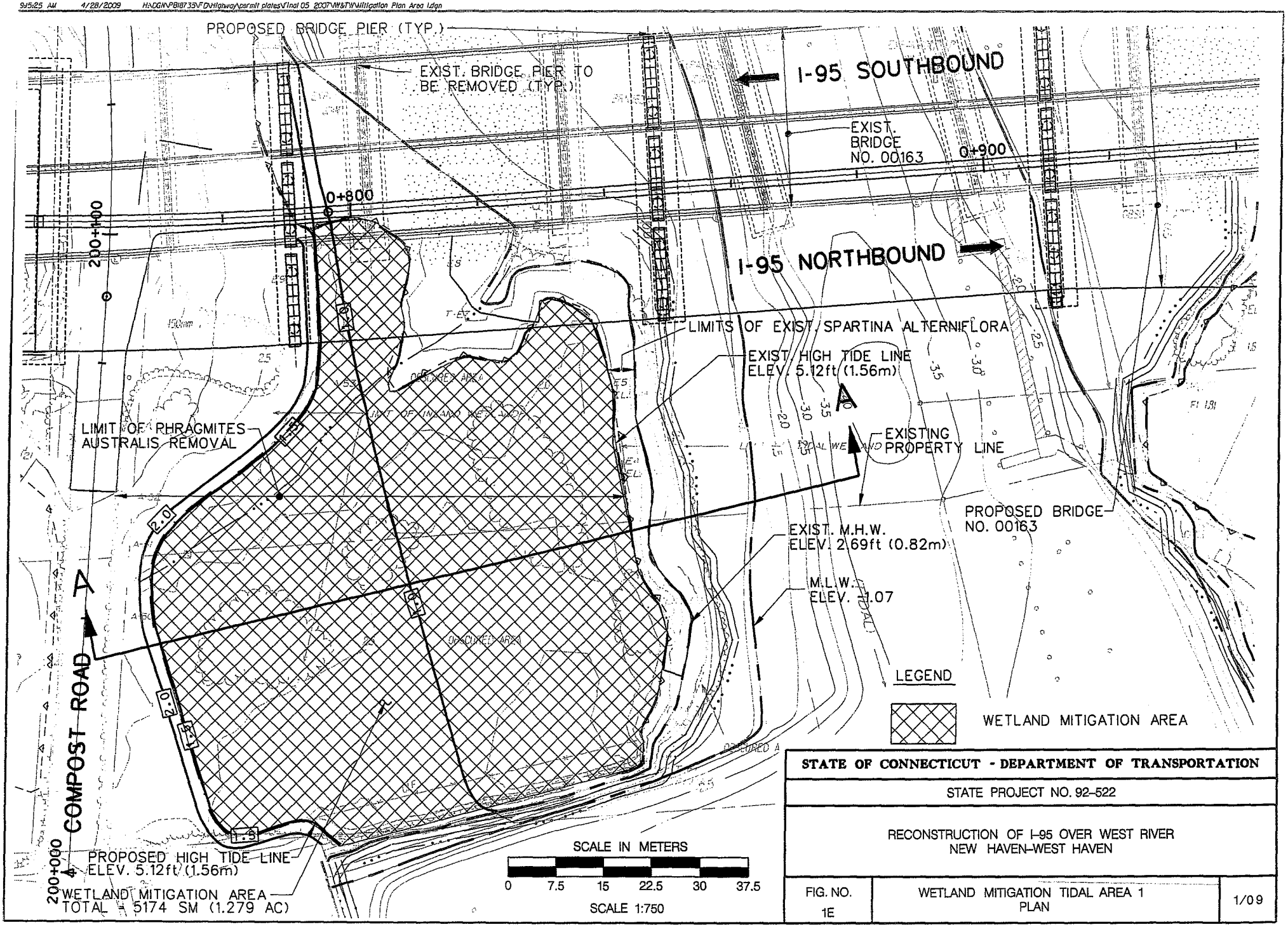

STATE OF CONNECTICUT - DEPARTMENT OF TRANSPORTATION

STATE PROJECT NO. 92-522

RECONSTRUCTION OF I-95 OVER WEST RIVER
NEW HAVEN-WEST HAVEN

FIG. NO.	WETLAND MITIGATION TIDAL AREA 1 PLAN	1/09
1E		

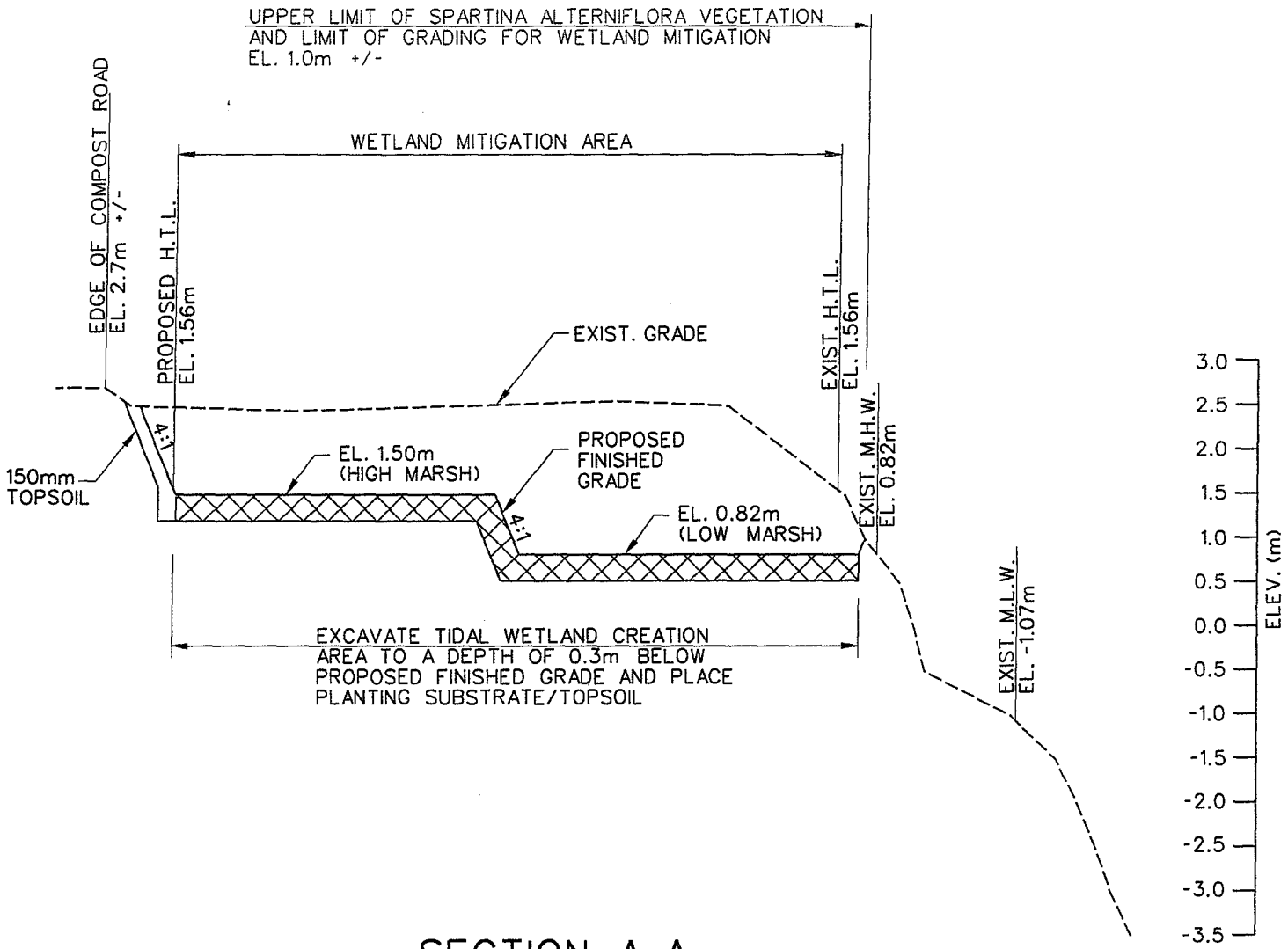

SECTION A-A

SCALE: 1:750 HORIZONTAL
1:75 VERTICAL

STATE OF CONNECTICUT - DEPARTMENT OF TRANSPORTATION		
STATE PROJECT NO. 92-522		
RECONSTRUCTION OF I-95 OVER WEST RIVER NEW HAVEN-WEST HAVEN		
FIG. NO. 2E	WETLAND MITIGATION TIDAL AREA 1 SECTION	1/09

9:02:45 AM 4/28/2009 H:\DGN\PB18735\FD\Highway\permit plates\Final 05 2007\W&TW\Mitigation Area 2.dgn

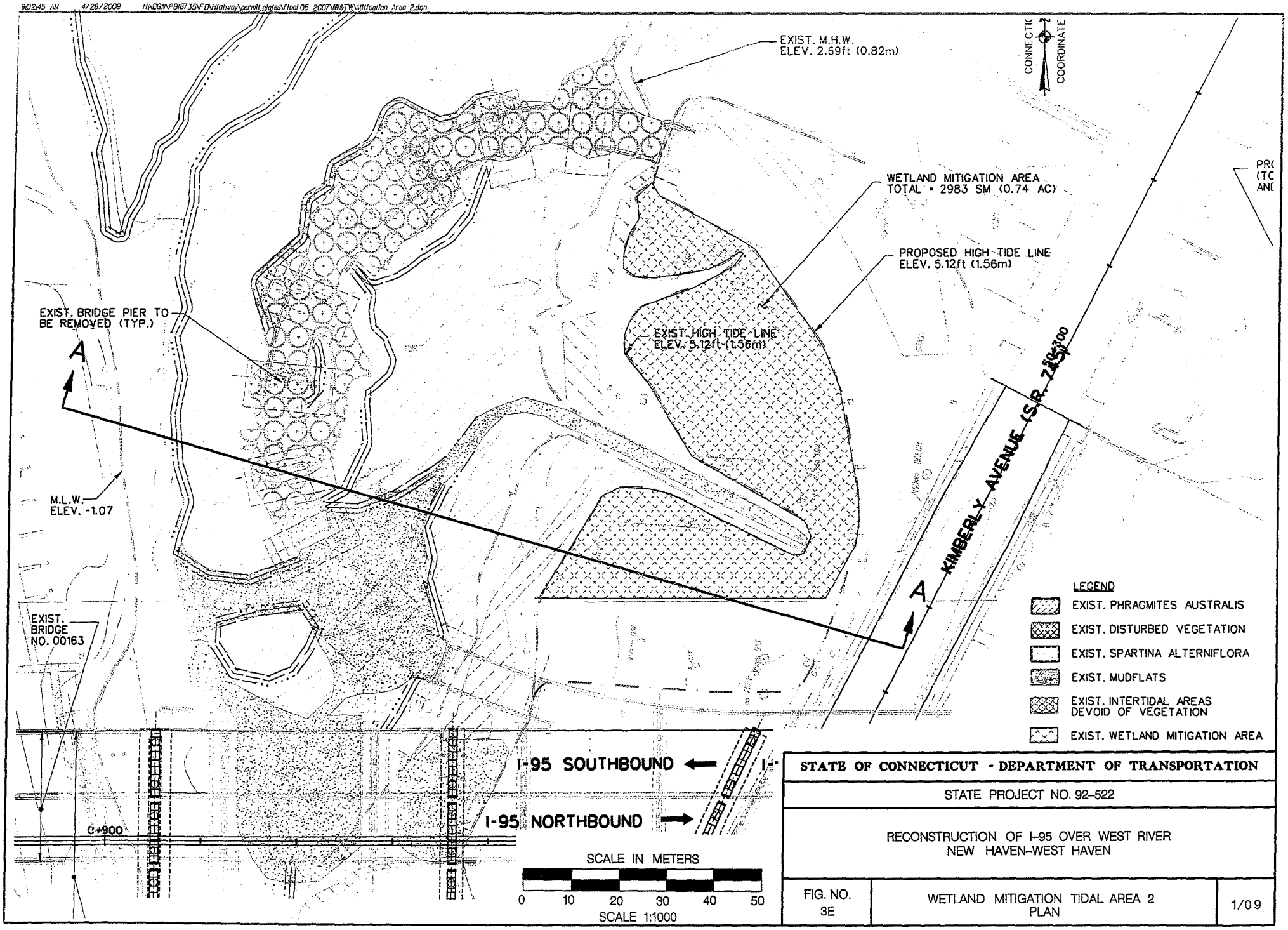

STATE OF CONNECTICUT - DEPARTMENT OF TRANSPORTATION

STATE PROJECT NO. 92-522

RECONSTRUCTION OF I-95 OVER WEST RIVER
NEW HAVEN-WEST HAVEN

FIG. NO.		
3E	WETLAND MITIGATION TIDAL AREA 2 PLAN	1/09

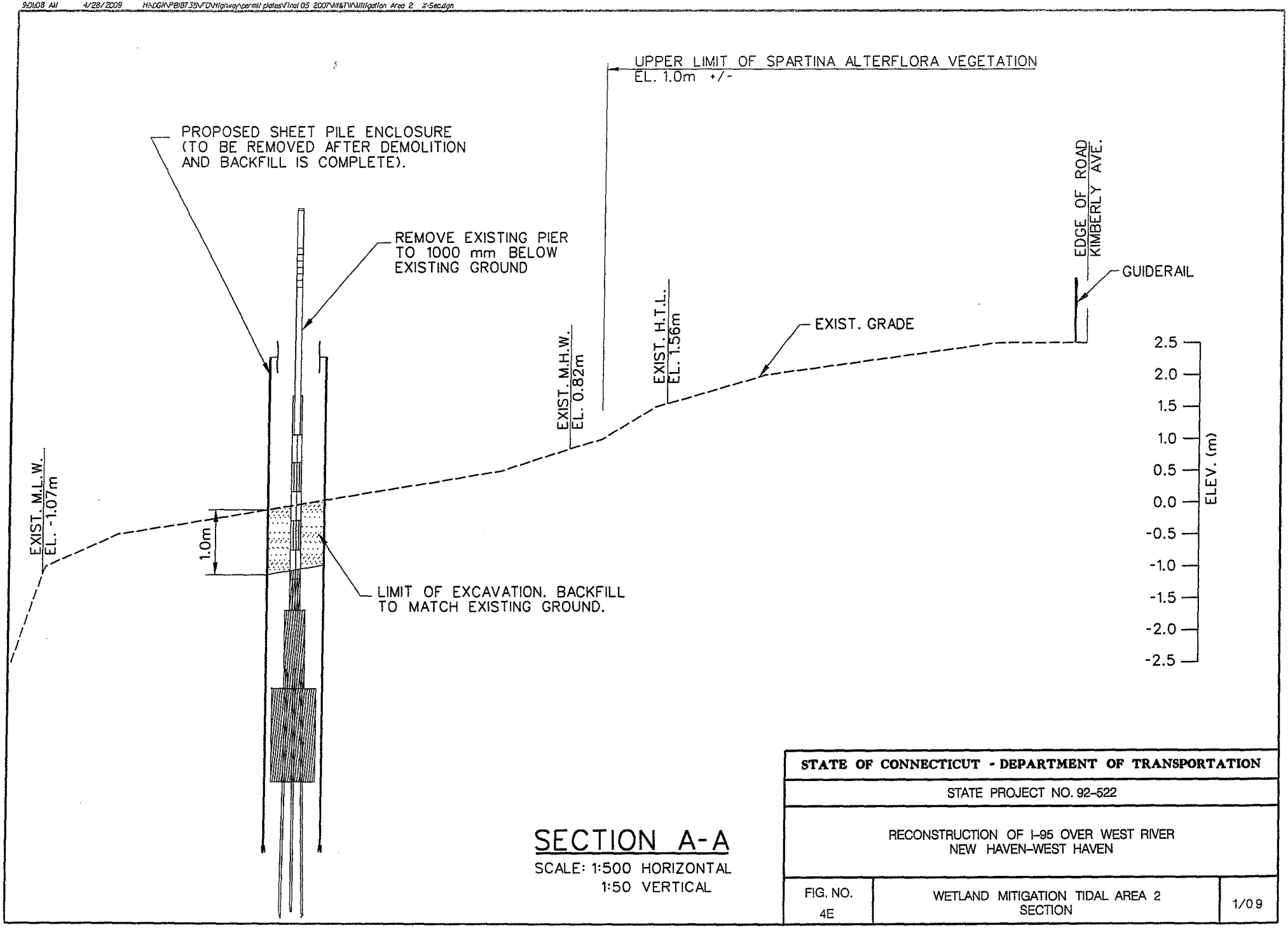

SECTION A-A

SCALE: 1:500 HORIZONTAL
1:50 VERTICAL

STATE OF CONNECTICUT - DEPARTMENT OF TRANSPORTATION		
STATE PROJECT NO. 92-522		
RECONSTRUCTION OF I-95 OVER WEST RIVER NEW HAVEN-WEST HAVEN		
FIG. NO. 4E	WETLAND MITIGATION TIDAL AREA 2 SECTION	1/09

9:03:04 AM 4/28/2009 H:\DGN\P818735\FD\Highway\permit plates\Final 05 2007\W&T\Mitigation Plan Area 1 Planting.dgn

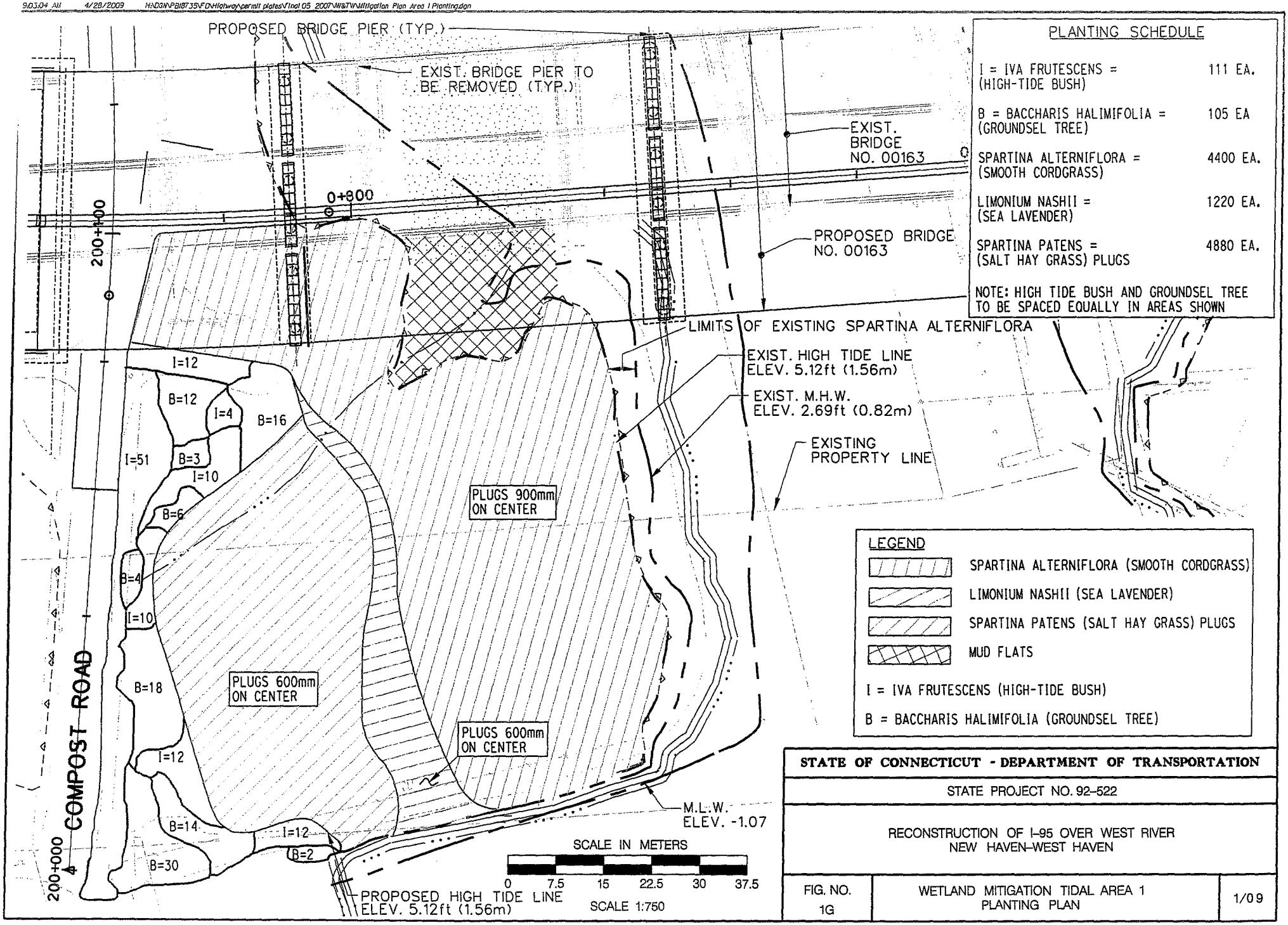

STATE OF CONNECTICUT - DEPARTMENT OF TRANSPORTATION

STATE PROJECT NO. 92-522

RECONSTRUCTION OF I-95 OVER WEST RIVER
NEW HAVEN-WEST HAVEN

FIG. NO.	WETLAND MITIGATION TIDAL AREA 1 PLANTING PLAN	1/09
1G		

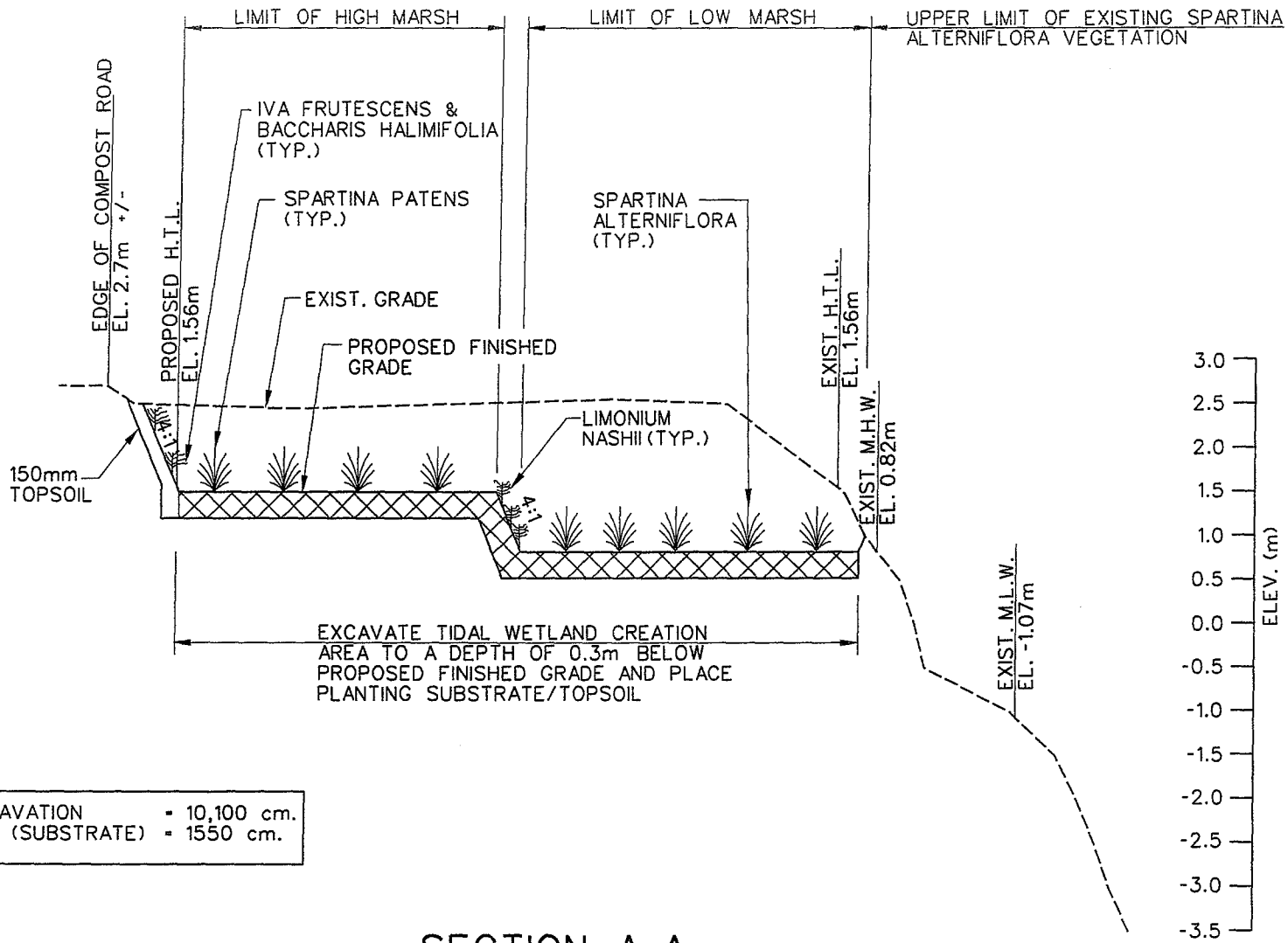

TOTAL EXCAVATION	= 10,100 cm.
TOTAL FILL (SUBSTRATE)	= 1550 cm.

SECTION A-A

SCALE: 1:750 HORIZONTAL
1:75 VERTICAL

STATE OF CONNECTICUT - DEPARTMENT OF TRANSPORTATION

STATE PROJECT NO. 92-522

RECONSTRUCTION OF I-95 OVER WEST RIVER
NEW HAVEN-WEST HAVEN

FIG. NO.		
2G	WETLAND MITIGATION TIDAL AREA 1 PLANTING SECTION	1/09

RECONSTRUCTION OF I-95
OVER WEST RIVER
NEW HAVEN/WEST HAVEN, CT
STATE PROJECT NO. 92-522

ATTACHMENT B1

SUMMARY OF IMPACTS (AREA)

RESOURCE TYPE	TW-1 (SF/SM)	TW-2 (SF/SM)	TW-3 (SF/SM)	TW-4 (SF/SM)	TW-5 (SF/SM)	TW-6 (SF/SM)	Temp. Trestle (SF/SM)	TOTAL IMPACT (SM/AC)	RESTORED AREA (SM/AC)	NET IMPACT (SM/AC)
VEGETATED WETLAND										
Permanent impact										
Phragmites Australis	0 / 0	0 / 0	0 / 0	0 / 0	0 / 0	394.71 / 36.67	0 / 0	**109.30/0.03**	**1516.10/ 0.37**	**1406.8\0.35 (restored)**
Spartina Alterniflora	0 / 0	0 / 0	0 / 0	0 / 0	0 / 0	0 / 0	0 / 0			
Currently devoid of Vegetation	0 / 0	0 / 0	781.78 / 72.63	0 / 0	0 / 0	0 / 0	0 / 0			
Subtotal	**0 / 0**	**0 / 0**	**781.78 / 72.63**	**0 / 0**	**0 / 0**	**394.71 / 36.67**	0 / 0			
Temporary impact										
Phragmites Australis	617.85 / 57.40	45.42 / 4.22	785.66 / 72.99	0 / 0	0 / 0	663.92 / 61.68	168.86 / 15.78	**1660.11/ 0.41**		
Spartina Alterniflora	0 / 0	314.95 / 29.26	568.66 / 52.83	0 / 0	3701.39 / 343.87	0 / 0	245.36 / 22.8			
Currently devoid of Vegetation	0 / 0	0 / 0	0 / 0	0 / 0	10746.8 / 998.41	0 / 0	9.44 / .88			
Subtotal	**617.85 / 57.40**	**360.38 / 33.48**	**1354.32 / 125.82**	**0 / 0**	**14448.19 / 1342.28**	**663.92 / 61.68**	**424.67 / 39.45**			
Restored Area	468.98 / 43.57	473.40 / 43.98	0 / 0	0 / 0	15338.57 / 1425	38.21 / 3.55	0 / 0			
WETLAND MITIGATION AREA 1										
Restored Area	0 / 0	0 / 0	0 / 0	0 / 0	0 / 0	0 / 0	0 / 0	**0 / 0**	**5174/1.28**	**5174/1.28 (restored)**
MUDFLATS										
Permanent impact	0 / 0	0 / 0	0 / 0	0 / 0	0 / 0	938.83 / 87.22	0 / 0	**87.22/0.022**	**373.18/0.09**	**285.96/0.07 (restored)**
Temporary impact	0 / 0	0 / 0	0 / 0	513.65 / 47.72	2502.07 / 232.45	1470.46 / 136.61	163.58 / 15.2	**431.98/0.107**		
Restored Area	0 / 0	0 / 0	0 / 0	0 / 0	3552.09 / 330.00	464.79 / 43.18	0 / 0			
RIVER BOTTOM										
Permanent impact	0 / 0	0 / 0	0 / 0	0 / 0	0 / 0	1883.68 / 175.00	0 / 0	**175.00/0.043**	**281.70/0.07**	**106.70/0.03 (restored)**
Temporary impact	0 / 0	0 / 0	0 / 0	0 / 0	0 / 0	23627.86 / 2195.1	239.07 / 22.21	**2217.31/0.548**		
Restored Area	0 / 0	0 / 0	0 / 0	0 / 0	0 / 0	3032.19 / 281.7	0 / 0			

NOTES:
1. Net Impact = total permanent impact - restored area
2. Restored area for TW-5 is due to the elimination of shading from the existing loop bridge to be demolished
3. Wetland Mitigation Area 2 is the restoration of TW-5.

Summary of Essential Fish Habitat (EFH) Designation

-

10□ x 10□ Square Coordinates:

Boundary	North	East	South	West
Coordinate	41° 20.0□ N	72° 50.0□ W	41° 10.0□ N	73° 00.0□ W

-

Square Description (i.e. habitat, landmarks, coastline markers): The waters within Long Island Sound within the square affecting south of the following: Woodmont, CT., West Haven, CT., New Haven, C., Fairhaven, CT., East Haven, CT., Monaquin, CT., Short Beach, CT., Whitneyville, CT., and Westville, CT., from just east of Johnson Point west past Merwin Pt. to Fairview Beach in Woodmont, CT.,. Also includes water around the following: Oyster River Pt., City Pt. Lighthouse Pt., Morgan Pt., South End Pt., Kelsey I., Johnson Pt., along with the Quinnipiac River. Also, the following features are affected: Townshend Ledge, Cow and Calf, Round Rock, and the Farm River.

-

Species	Eggs	Larvae	Juveniles	Adults
Atlantic salmon *(Salmo salar)*			X	X
Atlantic cod *(Gadus morhua)*				
haddock *(Melanogrammus aeglefinus)*				
pollock *(Pollachius virens)*			X	X
whiting *(Merluccius bilinearis)*				X
offshore hake *(Merluccius albidus)*				
red hake *(Urophycis chuss)*	X	X	X	X
white hake *(Urophycis tenuis)*				
redfish *(Sebastes fasciatus)*	n/a			
witch flounder *(Glyptocephalus cynoglossus)*				
winter flounder *(PleuroneCTes americanus)*	X	X	X	X
yellowtail flounder *(PleuroneCTes ferruginea)*				
windowpane flounder *(Scopthalmus aquosus)*	X	X	X	X
American plaice *(Hippoglossoides platessoides)*				

ocean pout *(Macrozoarces americanus)*				
Atlantic halibut *(Hippoglossus hippoglossus)*				
Atlantic sea scallop *(PlacopeCTen magellanicus)*				
Atlantic sea herring *(Clupea harengus)*			X	X
monkfish *(Lophius americanus)*				
bluefish *(Pomatomus saltatrix)*			X	X
long finned squid *(Loligo pealei)*	n/a	n/a		
short finned squid *(Illex illecebrosus)*	n/a	n/a		
Atlantic butterfish *(Peprilus triacanthus)*				
Atlantic mackerel *(Scomber scombrus)*	X	X	X	X
summer flounder *(ParaliCThys dentatus)*			X	
scup *(Stenotomus chrysops)*	X	X	X	X
black sea bass *(Centropristus striata)*	n/a		X	
surf clam *(Spisula solidissima)*	n/a	n/a		
ocean quahog *(Artica islandica)*	n/a	n/a		
spiny dogfish *(Squalus acanthias)*	n/a	n/a		
tilefish *(Lopholatilus chamaeleonticeps)*				
king mackerel *(Scomberomorus cavalla)*	X	X	X	X
Spanish mackerel *(Scomberomorus maculatus)*	X	X	X	X
cobia *(Rachycentron canadum)*	X	X	X	X
sand tiger shark *(Odontaspis taurus)*		X		